CA-710
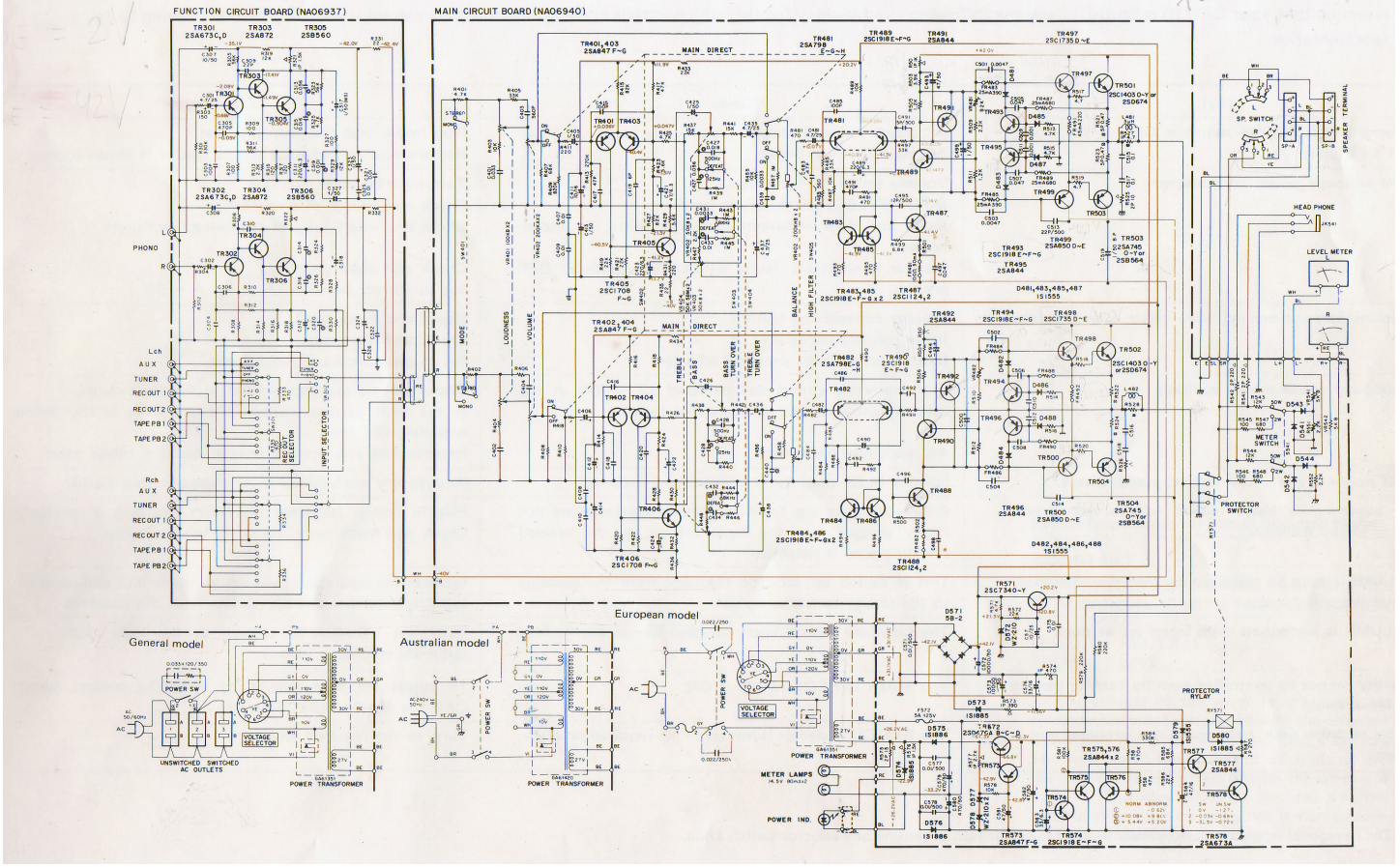
SCHEMATIC DIAGRAM