$3.00

SHERWOOD

S7250CP

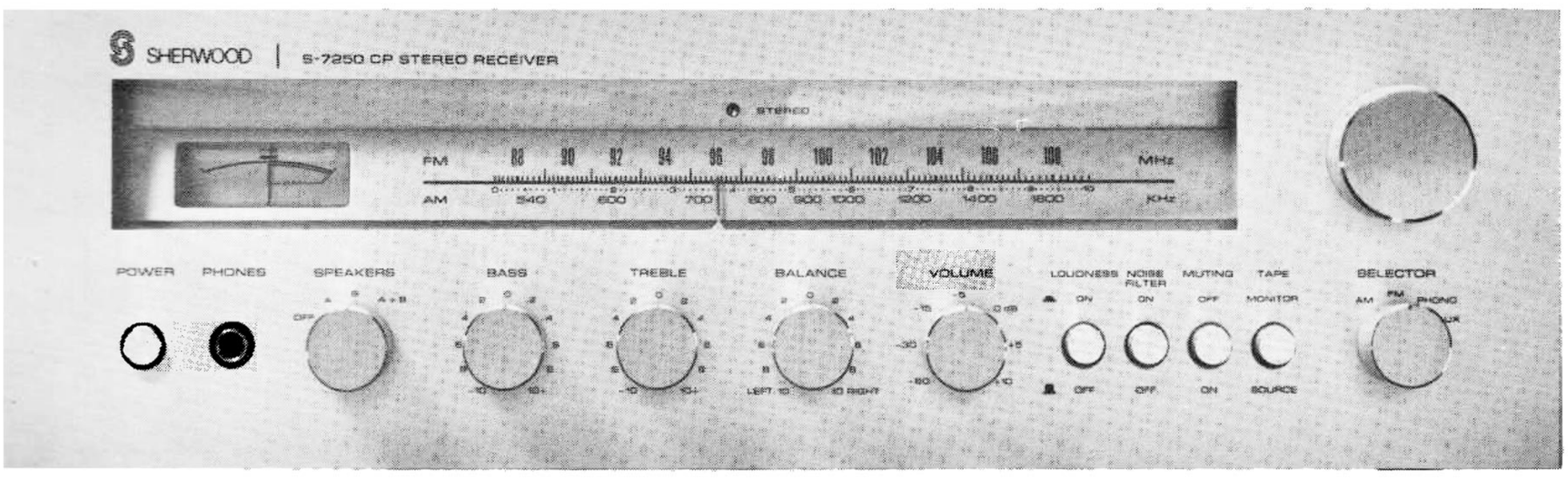

SERVICE MANUAL

www.hifiengine.com

CONTENTS

FRONT PANEL FEATURES 1

BLOCK DIAGRAM 2

SERVICING AND ADJUSTMENT PROCEDURES

- AMPLIFIER SERVICING AND ADJUSTMENT 3
- USE OF A VARIAC 3
- LINE FUSE AND INITIAL CIRCUIT CHECKS 3
- AMPLIFIER FAULT ANALYSIS 3
- DISTORTION IN AMPLIFIER OUTPUT 4
- OUTPUT TRANSISTOR BIAS ADJUSTMENT 4
- BIAS ADJUSTMENT USING AN INTERMODULATION DISTORTION ANALYZER 4
- BIAS ADJUSTMENT USING A HARMONIC DISTORTION ANALYZER 5
- BIAS ADJUSTMENT USING A MILLIVOLTMETER 5
- BIAS ADJUSTMENT USING A LINE WATTMETER 5
- POWER SUPPLY SERVICING AND FAULT ANALYSIS 6
- AMPLIFIER ELECTRONIC PROTECTION AND SPEAKER SYSTEM CHECKS 6
- FM TUNER AND IF ALIGNMENT 6
- DETECTOR ALIGNMENT USING AN OSCILLOSCOPE 7
- DETECTOR ALIGNMENT USING A HARMONIC DISTORTION ANALYZER 7
- ZERO CENTER TUNING METER ADJUSTMENT 7
- PHASE LOCK LOOP MULTIPLEX ADJUSTMENT 7
- PLL ADJUSTMENT USING A DIGITAL FREQUENCY COUNTER AND A FM STEREO GENERATOR 7
- PLL ADJUSTMENT USING AN FM STEREO GENERATOR 8
- STEREO THRESHOLD ADJUSTMENT 8
- AM TUNER AND IF ALIGNMENT 8
- SIGNAL METER CALIBRATION 8
- DIAL STRINGING DETAIL 8

SPECIFICATIONS 9

PARTS LOCATION PICTORIALS

- CHASSIS BOTTOM VIEW 10
- CHASSIS TOP VIEW 11

REPLACEMENT PARTS LIST 12

SCHEMATIC DIAGRAM (See Supplements)

CIRCUIT BOARD COMPONENT LAYOUT (See Supplements)

www.hifiengine.com

FRONT PANEL FEATURES

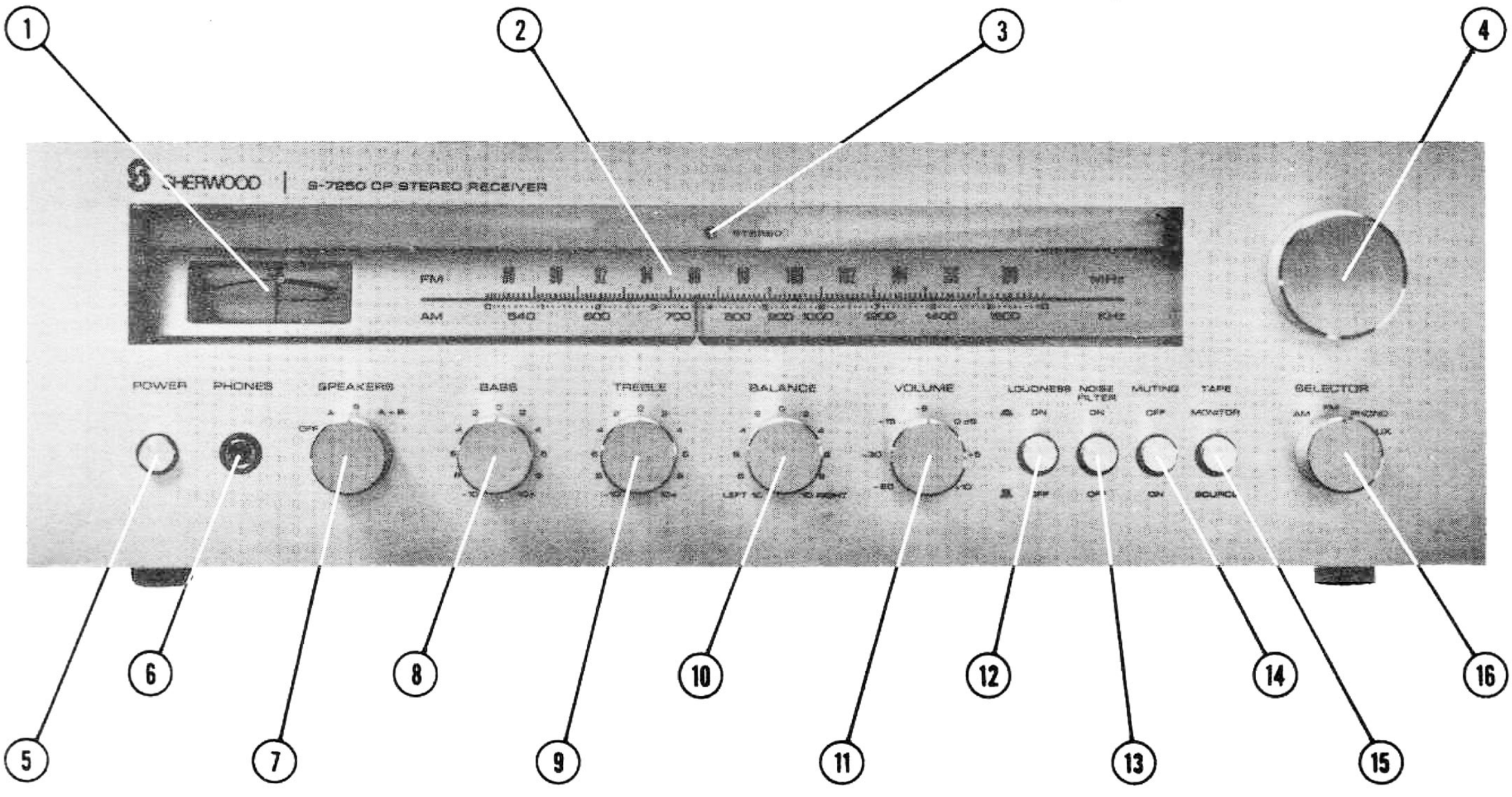

1. FM-AM TUNING METER: For precise tuning of FM and AM stations.
2. ILLUMINATED TUNING SCALES.
3. FM STEREO INDICATOR LED: Indicates only when the output of the tuner section is in stereo.
4. TUNING CONTROL: Counter balanced for easy tuning.
5. POWER OFF-ON SWITCH.
6. STEREO HEADPHONE JACK.
7. SPEAKER SELECTOR SWITCH: Activates "A" speakers, "B" speakers, "A" and "B" speakers, or shuts off all speakers for headphone only listening.
8. BASS CONTROL: Varies low frequency levels as much as ±10dB.
9. TREBLE CONTROL: Varies high frequency levels as much as ±10dB.
10. BALANCE CONTROL: Balances the relative volume levels of the left and right speakers.
11. VOLUME CONTROL.
12. LOUDNESS SWITCH: Adds loudness compensation for low level listening.
13. NOISE FILTER: Removes "scratch" from records or background "hiss" from noisy FM stations.
14. FM MUTING SWITCH: Removes FM interstation noise.
15. TAPE MONITOR SWITCH: Permits tape playback or monitoring of a 3 head tape deck.
16. SELECTOR SWITCH: To select your listening source: AM, FM, FM Stereo, Phono, or Auxiliary.

www.hifiengine.com

BLOCK DIAGRAM

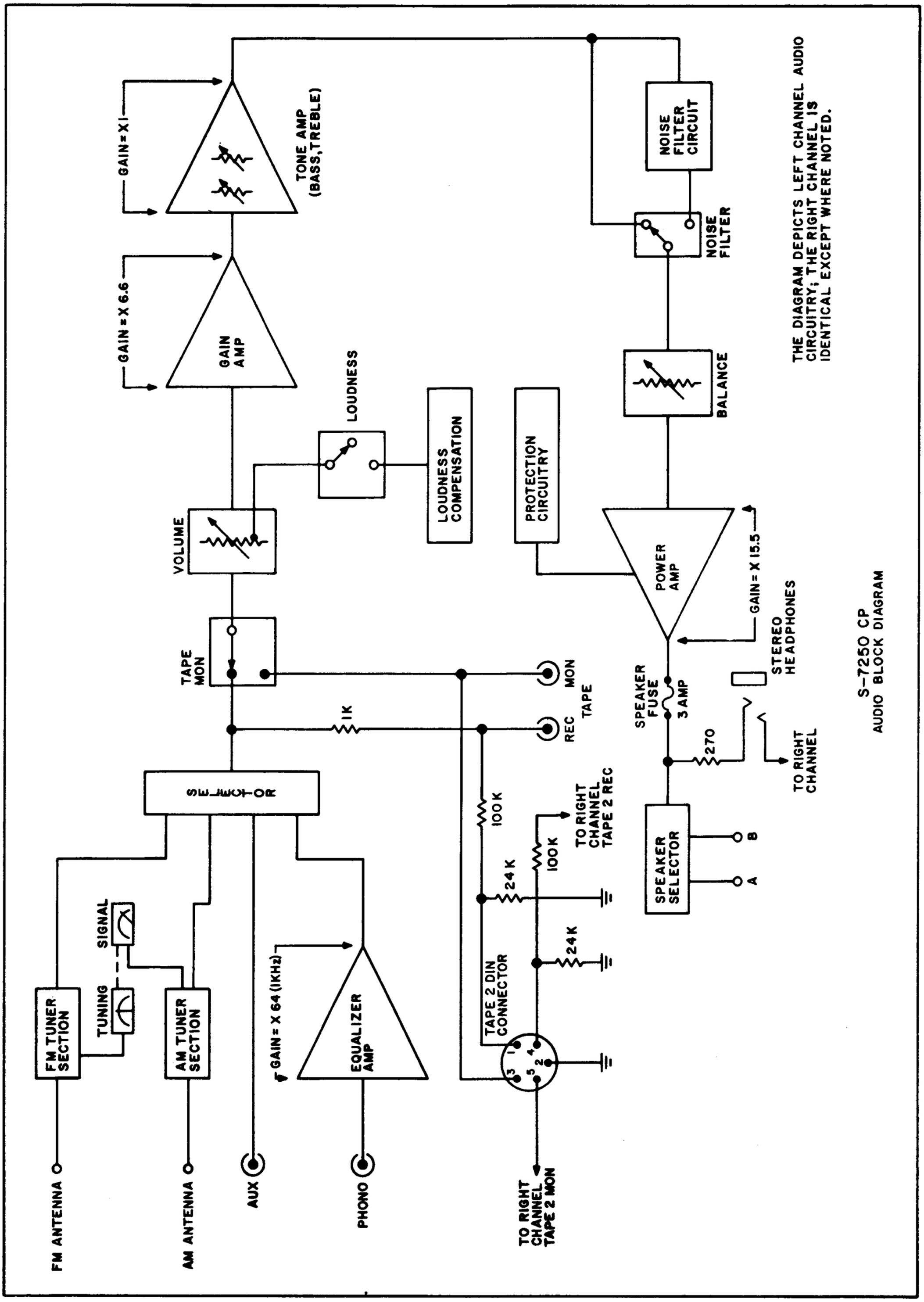

SERVICE AND ADJUSTMENT PROCEDURE

AMPLIFIER SERVICE AND ADJUSTMENT:

NOTES:

1. For simplicity only the left channel and its related circuitry are described. The right channel is identical except for reference symbol numbers (see Schematic Diagram).
2. As a convenience for fast component location, this manual contains detailed pictorials of all the printed circuit boards. Reference to these pictorials should aid considerably in the quick, accurate fault analysis of an existing malfunction.
3. To facilitate servicing, the S7250 was designed so that the printed circuit boards are readily accessable. Components can be tested or unsoldered and replaced, if necessary, without removing boards or assemblies.

USE OF A VARIAC:

It is imperative that a variable voltage line source (Variac) equipped with a line wattmeter to identify abnormal power consumption be used when servicing power amplifiers and associated power supply circuitry. With the Volume (Loudness) control set at minimum, the power consumption should not exceed 20 watts as the voltage is increased by the Variac to the rated 120VAC. If the power consumption begins to exceed 20 watts, do NOT increase the line voltage any further. Determine if the malfunction is in the power amplifier, power supply, preamplifier, or tuner section of the receiver.

LINE FUSE AND INITIAL CIRCUIT CHECKS:

Verify that the line fuse is unopened and check quiescent power consumption. The main cause for abnormal power consumption, in order of decreasing occurance, are:

1. Open or shorted amplifier output, driver or pre-driver transistors.
2. Open or shorted power supply diodes.
3. Shorted power transformer.

AMPLIFIER FAULT ANALYSIS:

If an amplifier channel is in question, check related circuit boards for burned parts and replace. Check all the transistors with an ohmmeter* for opens or shorts and replace if defective.

* WARNING: Some ohmmeters may damage sensitive solid-state devices. Whenever possible, use a high resistance range (at least RX10).

IMPORTANT: For the following tests, an 8 ohm load resistor must be connected to each of the two power amplifier (speaker) output terminals.

Use the centerpoint voltage (measured from the plus [+] speaker terminal to ground) as a guide. The centerpoint voltage should always be Zero ±30mV. Any deviation suggests defective devices.

If channel operation is still faulty, verify that there are no shorted capacitors, open resistors, etc., on the board.

Inspect the underside of the board for shorted pads, broken connections, etc.

When the board is restored, readjust the Output Bias (see next page).

www.hifiengine.com

DISTORTION IN AMPLIFIER OUTPUT:

Distortion which exceeds the amplifier ratings (see Specification Section) may be due to the following:

1. Mismatched output transistors.
2. Defective (low-beta) driver transistors.
3. Incorrectly adjusted output transistor bias.

OUTPUT TRANSISTOR BIAS ADJUSTMENT:

Proper output transistor operation and output bias adjustment are most important to assure cool, low-distortion operation of the amplifier. Bias adjustment is necessary if the output transistors are replaced* or any of the transistors in the driver circuitry of the amplifier exhibits one or more of the following symptoms;

1. Overheating of the output transistors under normal operating conditions.
2. Excessive low level Intermodulation Distortion (IMD) or Total Harmonic Distortion (THD) - more than 0.08% at 3.0 volts across 8 ohms.

* It is extremely important that the insulating washers used to separate the output transistors from their heat sink be unbroken and installed with heat transfer compound liberally applied to all surfaces in contact with each other. Make certain that the emitter and base pins of the output transistors do not touch any part of the heat sink assembly.

NOTE: For the following tests, an 8 ohm load resistor must be connected to each of the two power amplifier (speaker) output terminals.

The following are four methods for adjusting output transistor bias:

BIAS ADJUSTMENT USING AN INTERMODULATION DISTORTION (IMD) ANALYZER:

1. Connect the receiver amplifier for testing.
2. Connect an Intermodulation Distortion Analyzer with a ratio of 4:1 using 60Hz and 7000Hz to the receiver AUX 1 inputs and set the SELECTOR switch to AUX 1.
3. Set the VOLUME (Loudness) control to maximum and adjust the generator for an amplifier output of 3.0 volts across the 8 ohm load of the amplifier channel under test.
4. While observing the resultant distortion waveform, adjust the left channel bias pot VR701a so that the crossover distortion is at the point of being eliminated (class "AB").

   NOTE: Class "A" operation (continued CW rotation) causes the output transistors to draw excessive current and consequently overheat. Refer to Figure 1 below.
5. Repeat Step 4 for the right channel.

IMPROPER BIAS ADJUSTMENT

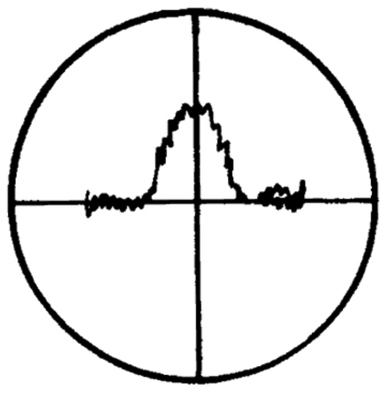

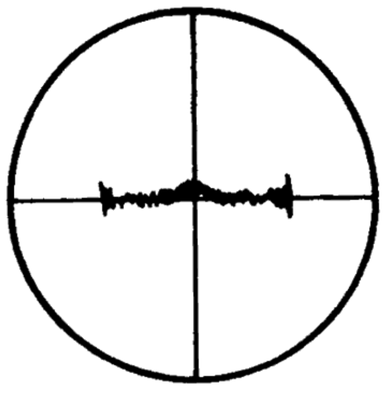

PROPER BIAS ADJUSTMENT

Figure 1

The following performance indicates a properly operating amplifier with both channels driven into 8 ohm loads:

1. Less than 0.08% Intermodulation Distortion (IMD) at 3.0V (typically 0.04%).
2. 20 watts of power per channel at no greater than 0.2% IMD (typically 0.07%).

www.hifiengine.com

BIAS ADJUSTMENT USING A HARMONIC DISTORTION ANALYZER:

1. Connect the receiver amplifier for testing.
2. Connect an oscillator with less than 0.01% distortion at 1KHz to the receiver Left AUX input and set the SELECTOR switch to AUX.
3. Set the VOLUME (Loudness) control to maximum and adjust the oscillator for an amplifier output of 3.0 volts across the 8 ohm load of the amplifier channel under test.
4. Using the Harmonic Distortion Analyzer, looking at the distortion of the amplifier properly nulled, make the adjustment as follows: Adjust bias for class "AB" operation by turning the bias potentiometer VR701a so that the crossover is at the point of being eliminated. NOTE: Class "A" operation (continued CW rotation) causes the output transistors to draw excessive current and overheat. Refer to Figure 2 below.
5. Repeat Steps 3 and 4 for the Right channel.

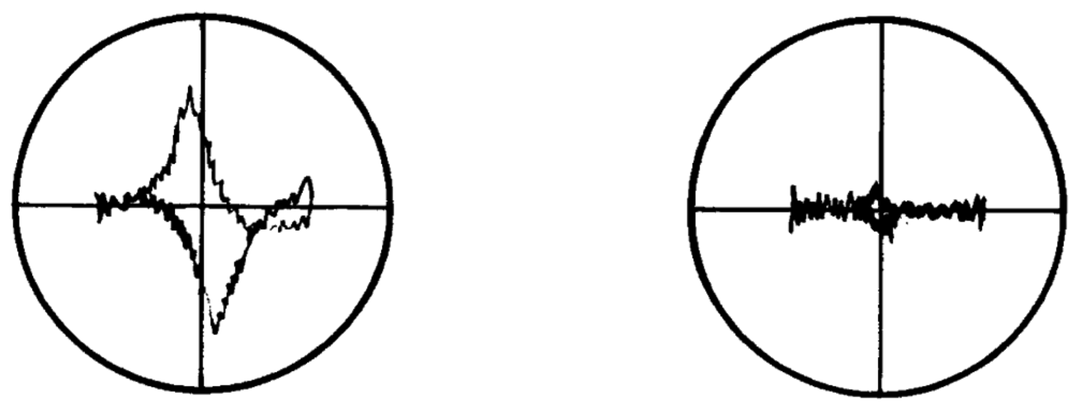

Improper Bias Adjustment — Proper Bias Adjustment

Figure 2

The following performance indicates a properly operating amplifier with both channels driven into 8 ohm loads:

1. Less than 0.08% THD at 3.0 volts (typically 0.04%).
2. 25 watts per channel at no more than 0.2% THD (1KHz).
3. 20 watts per channel at no greater than 0.2% (typically 0.07%)THD (20-20,000Hz).

BIAS ADJUSTMENT USING A MILLIVOLTMETER:

If an accurate digital or analog voltmeter is available, the bias pots (VR701a Left and VR701b Right channel) can be adjusted to indicate 3.6 mV across an output transistor's emitter resistor. Proceed as follows:

1. Remove all amplifier input signals.
2. Rotate the LOUDNESS LEVEL control to minimum.
3. Connect the voltmeter across either R720a or R721a emitter resistors of the left channel power output transistors TR709a and TR710a.
4. Adjust bias potentiometer VR701a, located on the driver board, for 3.6 mV DC.
5. Repeat Steps 3 and 4 for the Right channel.

BIAS ADJUSTMENT USING A LINE WATTMETER:

When test equipment required for previous bias adjustments is not readily available and adjustment is absolutely necessary, the following procedure may be used which requires only an accurate line wattmeter:

1. Turn the VOLUME (Loudness) control to minimum.
2. Adjust the bias pots (VR701 Left and Right channel) one at a time to the point at which the amplifier begins to cause a very slight increase in line wattage consumption. Typical proper operation would develop a line wattage consumption of 20 watts.

www.hifiengine.com

POWER SUPPLY SERVICING AND FAULT ANALYSIS:

Power supply malfunctions are usually due to shorted or open power diodes (located on the Amplifier PC Board); shorted or open zener diodes or transistors located on the Amplifier PC Board, or a defective power transformer.

These devices may be easily checked using an ohmmeter. The transformer's operation may be checked by measuring secondary voltages with the associated circuit legs disconnected. Shorted windings can cause abnormal power consumption in a unit that otherwise functions well. NOTE: Secondary windings can be disconnected by removing fuses F801, F802 and F803.

AMPLIFIER ELECTRONIC PROTECTION AND SPEAKER SYSTEM CHECKS:

It is necessary in the design of a high powered receiver to provide protection for both the amplifier AND the speaker load. Each channel is protected with a 3 Amp fuse.

When there is no output to the speaker terminals, check the fuse for that channel. If the fuse is open, check the speaker connections for shorted wires or a shorted speaker (speaker load resistance should not indicate less than 4 ohms resistance on an ohmmeter). If the amplifier is suspect, the following explanation of its normal operation characteristics may be helpful.

The amplifier DC offset voltage (measured from the plus [+] speaker terminal to ground) should be Zero ±30mV. Any larger deviation suggests defective devices. If power amplifier devices are replaced, the DC offset voltage should be rechecked. Jumper wires, indicated with an asterick on the schematic, across R702 and in series with R704 are used to establish DC offset. If the center point is shifted more than 30mV minus, cut the jumper across R702. If it is more than 30mV positive, cut the jumper in series with R704.

The complementary output transistors are load line limited, with the maximum current limited to 3.87A peak (equivalent to 30 watts @ 4 ohms). Signal voltages developed across the output transistor's emitter resistors R720a and R721a forward-bias transistors TR705a and TR706a shunting the output transistor's base drive signal. This is a continually sampling circuit which limits output transistor current only when it is necessary, after which the circuit resumes normal operation.

FM TUNER AND IF ALIGNMENT: (Refer to PART LOCATION PICTORIALS)

1. Set the SELECTOR switch to FM and turn the FM MUTING switch off. Connect an FM Generator to the 300 ohm antenna terminals using a matching transformer with a 1:1 voltage ratio or, if necessary, use a 2:1 ratio resistive network as shown below in Figure 3.
2. Tune the receiver to a point of no signal or interference near 90MHz.
3. Tune the FM Generator, modulated ±300KHz @ approximately 20uV output level, to the receiver frequency. Connect an RF Detector Probe to Test Point 1, TP-1 (Pin 1 of IC201, HA1137) and center the FM IF response on the oscilloscope. The FM IF bandpass characteristics are now being displayed. Adjust the core of the converter FM IF transformer T101 for maximum gain and symmetry, as illustrated in Figure 4.

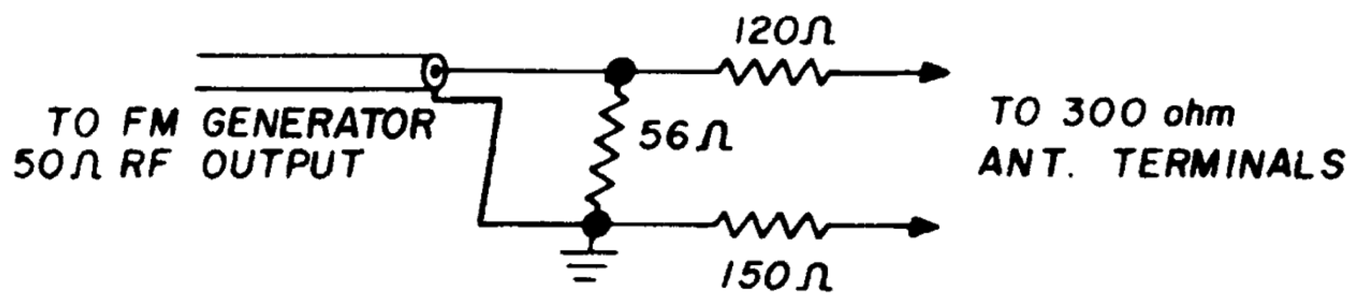

Figure 3

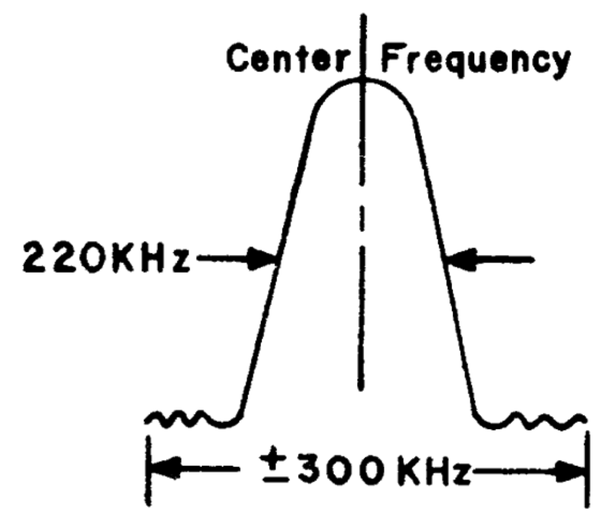

Figure 4

4. The FM Front End Alignment can also be determined while observing the oscilloscope display of Step 3. Tune the receiver and generator to a point of no interfering signal near 90MHz. Check that the receiver dial pointer indicates within ±100KHz from the FM generator frequency. (If the generator output is not accurately calibrated, a FM station can be used as a calibration reference.) If the dial deviation exceeds 100KHz,

www.hifiengine.com

adjust the local oscillator coil, L104, slightly, until optimum dial calibration is obtained. To adjust the coil, very slightly compress or expand its air core windings with a non-metalic tool until proper tuning inductance is obtained. Next, adjust the RF amplifier coil L102 for maximum gain. The antenna coil (L101) is a wider band tuned circuit, which is factory pretuned and normally does not require tuning. Tune the receiver and generator to a point of no interference near 106MHz. Check the dial calibration. If required, adjust the local oscillator trimmer, TC103, until optimum dial calibration is obtained. Now, adjust the antenna and RF amplifier trimmer capacitors, TC101 and TC102, for maximum gain. Repeat alignment at 90MHz and 106MHz until no further improvement is obtained.

5. DETECTOR ALIGNMENT USING AN OSCILLOSCOPE: To align the FM detector, leave the FM generator connected as in Step 1, and move the oscilloscope lead to the REC output jack on the rear panel. The detector recovered audio can also be observed at Test Point 2 (TP-2). Reduce the modulation to ±75KHz. Adjust the bottom core of the detector transformer, T201, for a 0 VDC reading on a voltmeter connected across R214 or adjust for zero indication on the receiver zero center tuning meter. The top core of the transformer, T201, is adjusted for best linearity as observed on the oscilloscope (see Figure 5). Recheck the voltmeter 0 VDC reading and readjust the bottom core again, if necessary.

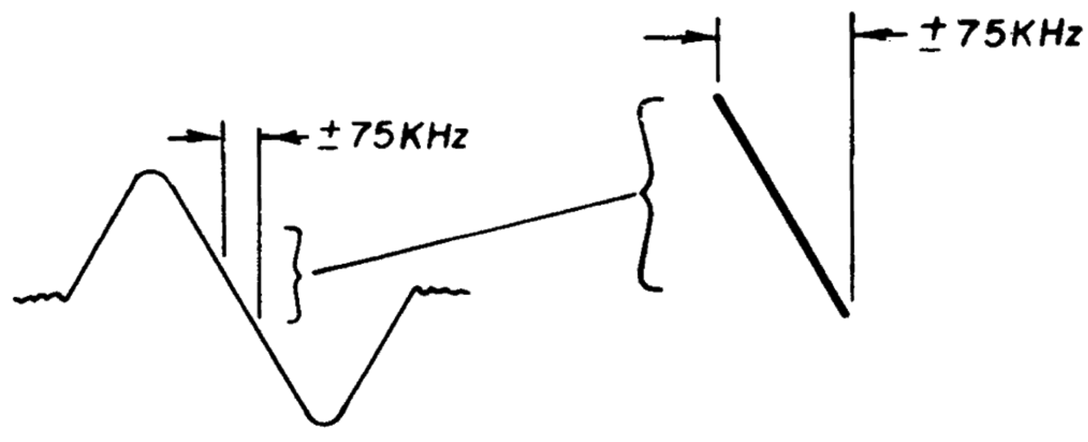

Figure 5

6. DETECTOR ALIGNMENT USING A HARMONIC DISTORTION ANALYZER: A Distortion Analyzer should be used in conjunction with an oscilloscope to obtain the best linearity, using 400 Hz @ ±75KHz modulation. Fine adjust the top core of the detector transformer T201 for the lowest distortion (slight adjustment only). Recheck the voltmeter 0 reading and readjust the bottom core again, if necessary.

7. ZERO CENTER TUNING METER ADJUSTMENT: To adjust for the correct zero indication, leave the FM Generator connected as in Step 1 and tune the receiver to a point of no signal or interference.

   A. Connect a DVM or VOM across resistor R214, 10K ohm, on the Tuner PC Board.

   B. Tune the bottom core of transformer T201 (Quadrature coil) for a Zero DC voltage indication on the voltmeter or zero indication on the receiver tuning meter.

PHASE LOCK LOOP MULTIPLEX ADJUSTMENT:

This receiver utilizes an integrated circuit phase lock loop (PLL) stereo demodulator. The phase lock loop is essentially a free-running 76KHz oscillator (subsequently divided down to 38KHz and 19KHz) which locks onto the stereo pilot tone of the transmitted signal, enabling accurate signal decoding. Proper adjustment of the free-running oscillator control VR202 is essential for stable and proper channel separation. The methods of making this adjustment are described below:

1. PLL ADJUSTMENT USING A DIGITAL FREQUENCY COUNTER AND AN FM STEREO GENERATOR: Tune the receiver to a point of no signal interference. Tune the generator to the receiver frequency and adjust it for an unmodulated signal at 100 microvolt output. With the digital frequency counter probe attached to pin 10 (Test Point 3, TP-3 provided) of IC202, adjust VR202 (FM MPX VCO) for 19KHz ±10Hz. Using a stereo signal, adjust VR203 for best total separation and minimum difference in the right-to-left and left-to-right separation. The separation should be 40dB minimum in reference to a 100% modulated audio at 1KHz.

   If 40dB is not obtainable, apply the pilot signal only and check the left and right multiplex outputs for 19KHz/38KHz residual. It should be a minimum of -60dB below audio reference.

www.hifiengine.com

2. PLL ADJUSTMENT USING AN FM STEREO GENERATOR: With the receiver tuned to a stereo signal, adjust VR202 to determine the end-points for stereo lock-in and then set VR202 halfway between these end-points. Using a stereo test signal, adjust VR203 for best separation.

STEREO THRESHOLD ADJUSTMENT: This receiver incorporates a stereo threshold circuit which automatically switches from mono to stereo FM mode if the station to which the receiver is tuned is transmitting a stereo program and if the station's signal strength (signal to noise ratio) is considered acceptable for stereo listening. Should the noise increase, the receiver will automatically switch to the mono mode.

To adjust the stereo threshold switching level, connect a FM Stereo Generator and an oscilloscope as used for multiplex alignment. With the receiver front panel STEREO/MONO switch in the STEREO mode, slowly increase the generator output from Zero to the automatic threshold level. Prior to the automatic switching point, the receiver will have equal (mono) Left and Right channel outputs. After the receiver's stereo threshold level is reached, the multiplex generator's Left channel modulation will appear only on the receiver's Left channel.

The receiver's desired stereo signal threshold level can be set by adjusting VR201. The recommended threshold level is 4 microvolts.

AM TUNER AND IF ALIGNMENT:

1. Set the receiver SELECTOR switch to AM. Tune the receiver to a point of no signal or interference near 600KHz. Connect the scope/VTVM to the REC output jack or Test Point 4, (TP-4). Connect the AM Generator output to the receiver AM Antenna terminal through a 200pF capacitor.
2. Adjust the AM Generator for 455KHz RF output, modulated @ 400Hz, 50%. Tune the AM Converter/1st IF cores of T301 for maximum audio output.
3. Adjust the AM Generator for 600KHz. If required, adjust the AM Oscillator, L301, so that the generator signal is received by the receiver at 600KHz, as indicated on the dial scale. Adjust the Rod Antenna core, L901, located at the end of the antenna rod assembly for maximum output as indicated on the scope/VTVM.
4. Tune the receiver and generator to a point of no interfering signal near 1400KHz. Check the dial calibration and if necessary adjust the AM Oscillator Trimmer, TC105, for optimum dial calibration. Adjust the Antenna Trimmer, TC104, for maximum output.
5. Repeat Steps 3 and 4 until no further improvement is obtained.

SIGNAL METER CALIBRATION: Adjust potentiometer VR301 for a 4½ division meter deflection with a 10,000uV signal generator input.

S-7250 CP DIAL STRING ASSEMBLY

1). START WITH THE TUNING GANG CLOSED.
2). CONNECT ONE END OF DIAL STRING TO POINT (1), AND WIND A 1/2 TURN CLOCKWISE AROUND TUNING GANG PULLEY.
3). PROCEED TO POINTS (2) AND (3).
4). PLACE STRING IN SLOTS ON POINTER GLIDE, AND PROCEED TO POINT (4).
5). WIND STRING 3 TURNS COUNTER CLOCKWISE AROUND DIAL SHAFT AT POINT (5).
6). PROCEED TO POINT (6), THEN WRAP STRING 2 TURNS CLOCKWISE AROUND TUNING GANG PULLEY, AND CONNECT STRING TO SPRING AT POINT (7).
7). CONNECT SPRING TO RING AT POINT (8).
8). TEST FOR FULL POINTER TRAVEL, AND SMOOTH DIAL OPERATION.

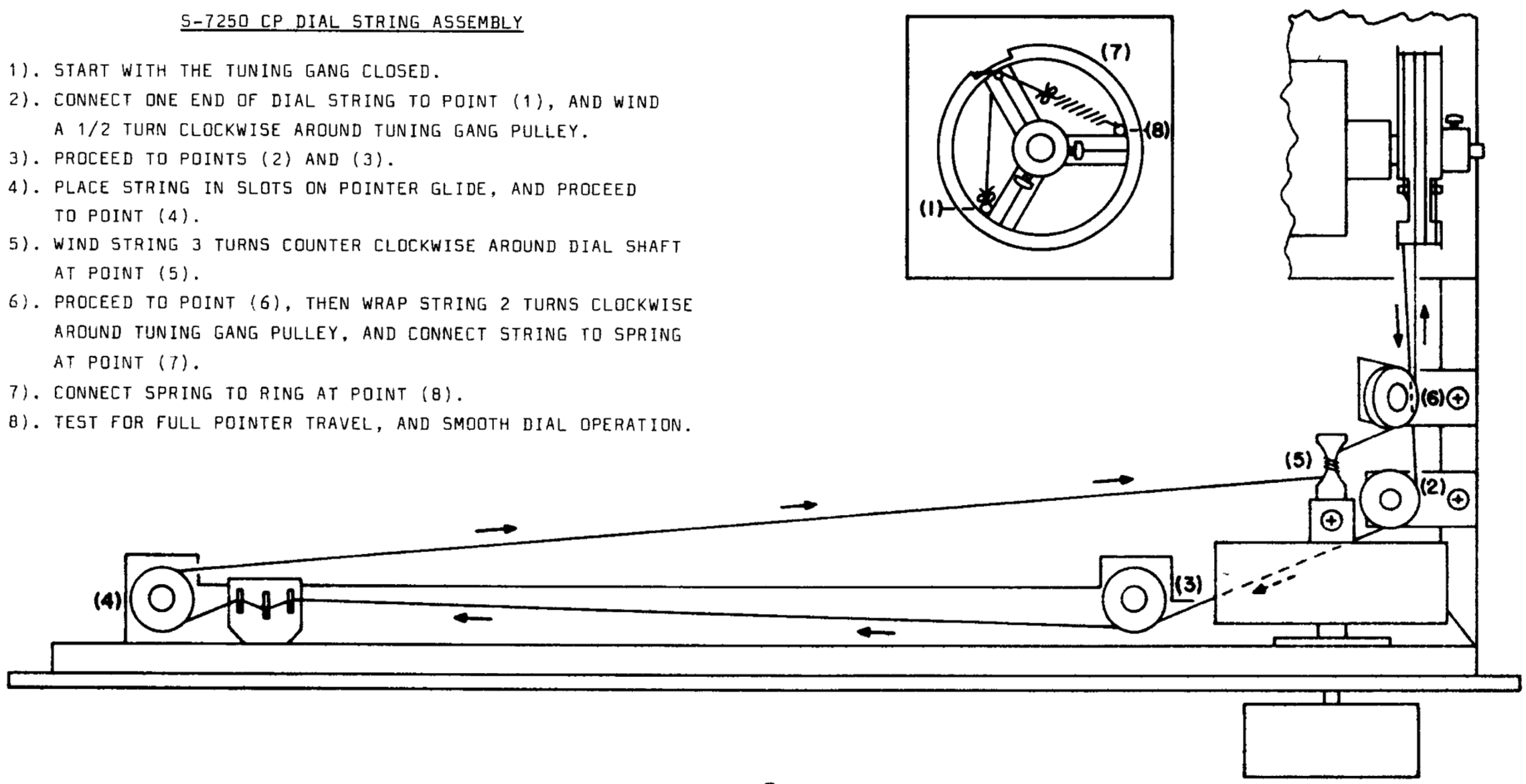

www.hifiengine.com

SPECIFICATIONS *

Power Amplifier

POWER OUTPUT: 20 watts per channel (13dBW) minimum RMS, at 8 Ohms from 20Hz-20KHz with no more than 0.2% Total Harmonic Distortion. 30 watts RMS, at 4 Ohms, at 1000Hz.

INTERMODULATION DISTORTION: (60 & 7000Hz, 4:1) Less than 0.2% @ 8 Ohm rated output.

DAMPING FACTOR: 30:1 @ 8 Ohm

HEADPHONE OUTPUT: 30:1 @ 8 Ohm

Preamplifier

INPUT SENSITIVITY (and Impedance) FOR RATED OUTPUT @ 1KHz:
- Phono: 2.5mV (47K Ohm/220pF)
- Aux: 160mV (50K Ohm)
- Tape Monitor: 160mV (50K Ohm)

PHONO INPUT CAPABILITY° FOR 0.2% THD @ 9V, RECORD OUTPUT:

	(1000Hz)	(10,000Hz)
Phono:	140mV	680mV

INPUT CAPABILITY FOR 0.2% THD, 1000Hz:
- Aux: Greater than 10V
- Tape Monitor: Greater than 10V

SIGNAL TO NOISE: (IHF "A" Wtg.) (Unweighted)

Referenced to 10mV at Phono Input.

Phono:	92dB	80dB

Referenced to Input Sensitivity.

Phono:	80dB	68dB
Aux:	95dB	85dB
Volume Minimum:	100dB	90dB

PHONO EQUIVALENT INPUT NOISE:
- Unweighted: -120dBV, 1.0uV
- IHF "A" weighting: -132dBV, 0.25uV

PHONO GAIN: 36dB

AUX GAIN: 38dB

RECORD OUTPUT IMPEDANCE: 1.5K Ohm

DIN RECORD OUTPUT IMPEDANCE: 18K Ohm

FREQUENCY RESPONSE:
- Phono: ±0.5dB RIAA Standard. Subsonic response: -6dB @ 10Hz, -15dB @ 4Hz
- Aux, Tape Monitor: 20-20,000Hz ±0.5dB
- Bass Control: ±14dB @ 50Hz (Detented)
- Treble Control: ±12dB @ 15,000Hz (Detented)
- High Filter: -3dB @ 7000Hz, -20dB @ 20KHz, 12dB/Octave
- LOUDNESS COMPENSATION @ -30dB setting: +8dB @ 100Hz, +2.5dB @ 10,000Hz

CROSSTALK: Better than 40dB from 20Hz-20KHz

*All specifications with 120VAC; specifications and design subject to possible change without notice.

°Since the RIAA Standard has a boost of 4.87 @ 10KHz, there is as much freedom from overload at 10KHz as at 1KHz.

FM Tuner

IHF SENSITIVITY: 10.8dBf (1.9uV)
- Mono Sensitivity for 50dB S/N: 16.11dBf (3.5uV)
- Stereo Sensitivity for 50dB S/N: 37.05dBf (39uV)

TOTAL HARMONIC DISTORTION (THD) @ 1000Hz:
- Mono: 0.15% @ 100% Modulation
- Stereo: 0.25% @ 100% Modulation

SIGNAL TO NOISE RATIO:
- Mono: -70dB
- Stereo: -66dB

CAPTURE RATIO: 1.0dB

STEREO SEPARATION:
- Better than 40dB @ 1000Hz
- Better than 30dB @ 20-10,000Hz

ALTERNATE CHANNEL SELECTIVITY (IHF): 60dB

SPURIOUS RESPONSE REJECTION: -60dB

IF REJECTION: -55dB

AM REJECTION: -55dB

SCA REJECTION: -60dB

FREQUENCY RESPONSE (Stereo and Mono): 20-15,000Hz +1dB, -2dB

AUTOMATIC STEREO THRESHOLD: 4uV

MUTING THRESHOLD: 4uV

AM Tuner

IHF SENSITIVITY: 31.25dBf (20uV)

TUNING RANGE: 530-1625KHz

SELECTIVITY: 25dB ±10,000Hz

FREQUENCY RESPONSE: -6dB @ 4000Hz

IMAGE REJECTION: -40dB @ 1MHz

IF REJECTION: -40dB @ 1MHz

SPURIOUS RESPONSE REJECTION: -40dB

General

POWER REQUIREMENTS:

Domestic Units:	115-125VAC,	50/60Hz
Export Units:	230-240VAC,	50/60Hz

RATED POWER CONSUMPTION: 20-100 watts

FUSES:

Power Line:	Domestic:	2.5 Amp 3AG
	Export:	1.5 Amp 3AG
Pilot Lamps:		1.5 Amp 3AG
Speaker Protection:		3.0 Amp 3AG
B+/B- Supply:		5.0 Amp 3AG

AC OUTLETS: 1 Unswitched. 150 watts Max.

SEMICONDUCTORS: 42 transistors, 1 J-FET, 3 integrated circuits, 4 power diodes, 3 zener diodes, 7 signal diodes, 1 LED.

SHIPPING WEIGHT: 18lbs/8.0 Kg.

www.hifiengine.com

PART LOCATION PICTORIALS

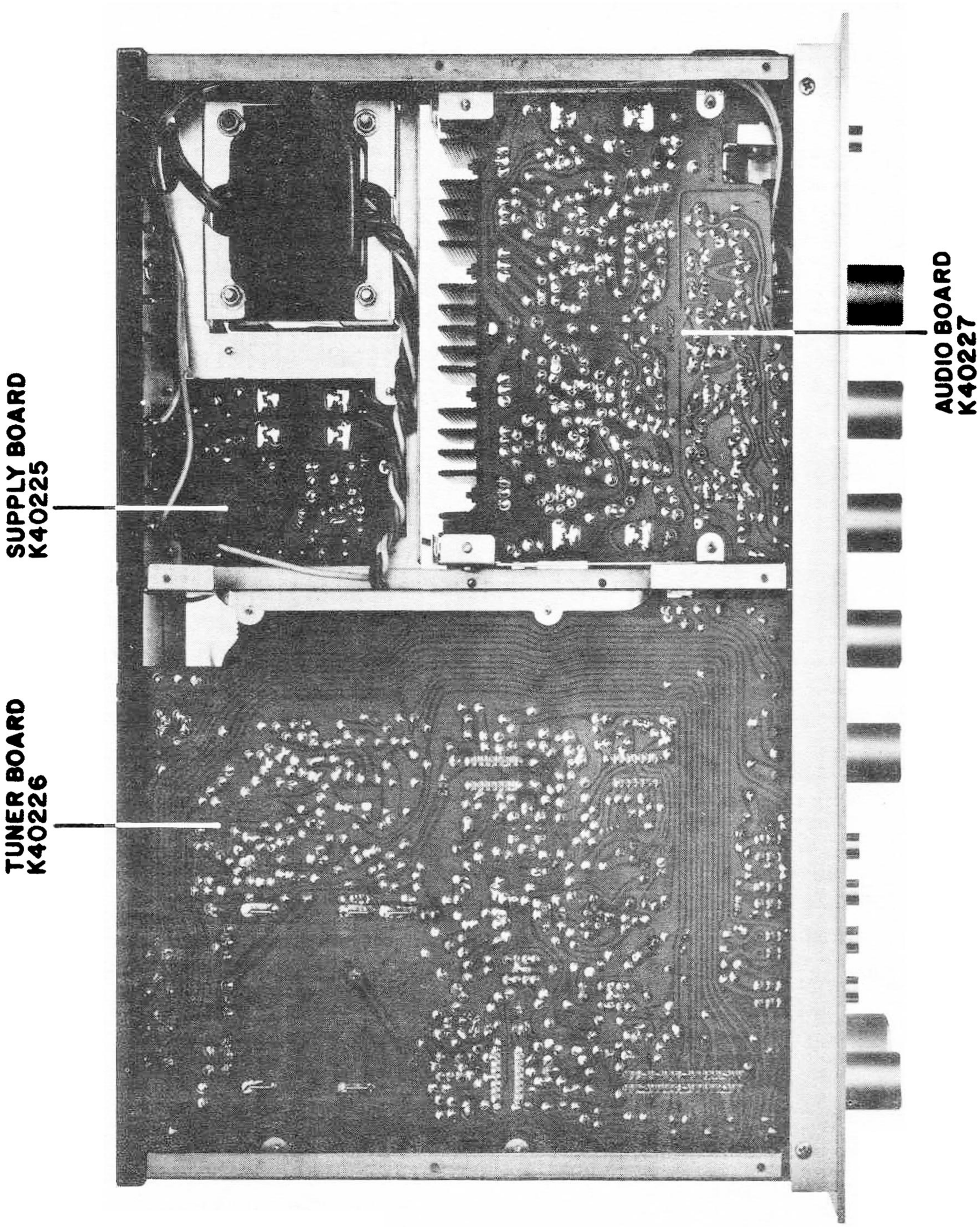

S-7250 CP
BOTTOM VIEW

www.hifiengine.com

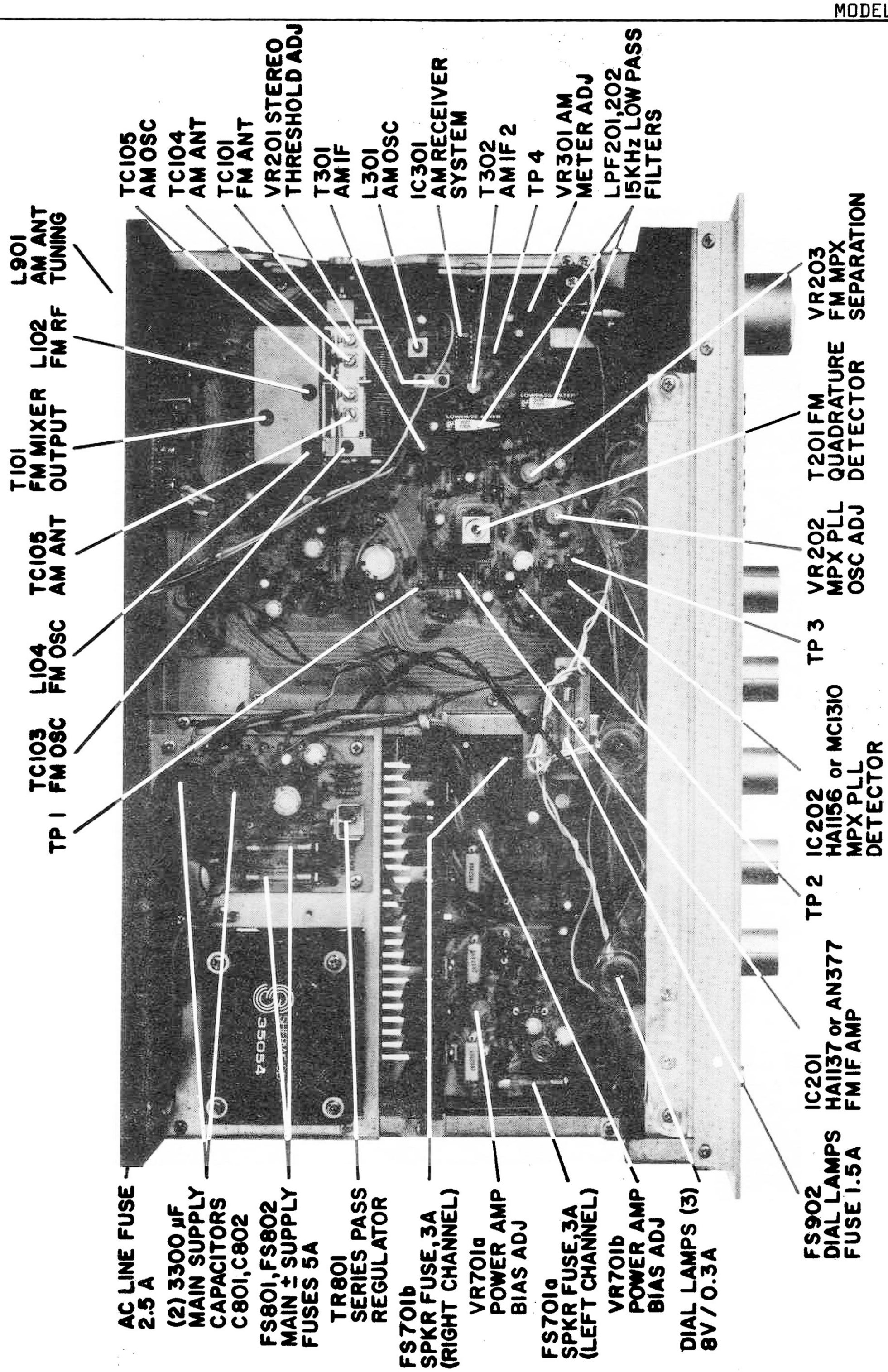

S-7250 CP
TOP VIEW

REPLACEMENT PARTS LIST

TRANSISTORS AND FETS	REFERENCE NUMBERS	PART NO.	LIST PRICE
2SA841	TR402a,b; 602a,b		$1.24
2SB595 (PNP OUTPUT)	TR710a,b		3.04
2SC374	TR802, 803		.84
2SC535	TR102		1.47
2SC1000	TR701a,b; 702a,b		1.28
2SC1342	TR103		1.56
2SD234 or TIP31B	TR801		1.70
2SD525 (NPN OUTPUT)	TR709a,b		2.40
2SK19 (FET, N-Channel)	TR101		2.05
CS9012	TR706a,b		.87
CS9013	TR704a,b		.87
CS9018 or 9016	TR201		.87
MPS-A06	TR707a,b		1.18
MPS-A56	TR703a,b; 708a,b		1.18
MPS-9630	TR202, 203, 705a,b		.85
MPS-9633	TR204, 205, 401a,b; 403a,b; 601a,b; 603a,b		1.03
INTEGRATED CIRCUITS			
HA1137	IC201		6.61
HA1156	IC202		6.44
HA1197	IC301		5.91
DIODES, SIGNAL, POWER, ZENER AND LED			
MA150 or CDG24 (Signal)	D201, 202, 501, 701a,b; 702a,b;		.59
1N5172, 2 Amp, 100PIV	D802, 803, 804, 805		1.03
1N757A, 9.1V Zener, 400mW	D801		.94
1N968B/BZY88C20, 20V Zener, 400mW	D401, 703		.89
LEDS, TIL209	D901		.94
ELECTROLYTIC CAPACITORS (Capacitance in microfarads. PC mounting unless otherwise specified)			
1/50WV	C713, 714	50AL-109-50E	.60
4.7/16WV	C208, 209, 213, 216, 227, 229, 311, 312, 408a,b; 605a,b; 611a,b; 715, 808	50AL-479-16E	.61
10/16WV	C309, 402a,b	50AL-100-16E	.63
22/35WV	C407a,b	50AL-220-35E	.81
47/16WV	C404a,b	50AL-470-16E	.81
100/16WV	C116, 409, 613, 704a,b; 811	50AL-101-16E	.86
220/16WV	C218	50AL-221-16E	1.00
220/16WV	C807	50AL-221-16E	1.13
1000/25WV	C410	50AL-102-25E	1.61
3300/35WV	C801, 802	50001-02	3.69
0.22/16WV(Solid Aluminum)	C223	50AS-228-16J	.59
0.47/16WV(Solid Aluminum)	C224, 225, 316, 601a,b	50AS-478-16J	.59
1.0/16WV (Solid Aluminum)	C205, 226, 228, 608a,b; 701a,b	50AS-109-16J	.59
COILS, TRANSFORMERS AND CERAMIC FILTERS			
ANTENNA, AM ROD ASSY.	L901	67025-06	3.65
COIL, QUADRATURE	T201 [#13]	30064	1.81
COIL, MPX FILTER	LPF201, 202	31007/35000070	2.57
COIL, AM OSCILLATOR	T301	30101	1.08
COIL, AM W/CERAMIC FILTER	T303	30102	1.67
COIL, AM IFT2	T302	30103	1.24
COIL, 18uH	L201 [144Hz-180J]	30112/35500310	.84
COIL, 2.7uH	L701a,b	30045	.84
COIL, 39mH	L601a,b	30113	.81
FILTER, CERAMIC, FM IF	CF201, 202 [SFE-10.7 MA8]	31008/35300012	1.61
TRANSFORMER, POWER	T1 120VAC, 50/60Hz	35054	28.78

www.hifiengine.com

ELECTRICAL COMPONENTS	REFERENCE NUMBERS	PART NO.	LIST PRICE
FUSE, 1.5 AMP, 3AG	F902 [Dial Lights]	312001.5	$ .30
FUSE, 2.5 AMP, 3AG	F901 [AC Line]	312002.5	.30
FUSE, 3.0 AMP, 3AG	F701a,b [Speaker Protection]	312003	.30
FUSE, 5.0 AMP, 3AG	F801, 802 [B- and B+ Supply]	312005	.30
LAMP, 8V, 300mA, w/leads	Dial Lights	64058	1.87
METER, FM/AM	M1	75019-02	7.30
POTENTIOMETER, DUAL, 100K	VR501a,b [Volume]	15063	3.28
POTENTIOMETER, DUAL, 100K	VR601a,b; 602a,b [Tone]	15064	2.40
POTENTIOMETER, 100K	VR702 [Balance]	15058-03	1.47
SWITCH, PUSH-BUTTON	S1 [Power On-Off] (TV3 Rated)	90125	2.93
SWITCH, PUSH-BUTTON, (DPDT)	S4, 5, 6, 7 [Loudness, FM Muting, Noise Filter, Tape Monitor]	90124A	4.07
SWITCH, ROTARY, 4 Pos.	S2 [Speaker Selector]	90133-02	2.45
SWITCH, ROTARY, 4 Pos.	S3 [Selector]	90129-01	5.13
SWITCH, SLIDE, (DPTT)	S8 [De-emphasis]	90138	1.24
TRIMMER RESISTOR, 4.7K	VR202 [MPX Osc. Adjustment]	16000	.84
TRIMMER RESISTOR, 47K	VR201 [Muting & Stereo Threshold Adj.]	16002	.84
TRIMMER RESISTOR, 22K	VR203 [Stereo Separation Adj.]	16003	.84
TRIMMER RESISTOR, 2.2K	VR301, 701a,b [AM Meter Adj: Output Bias]	16004	.84

MECHANICAL COMPONENTS		
ESCUTCHEON ASSEMBLY	61063A	21.08
DIAL POINTER	66028-02	1.44
DIAL GLASS	63053A-04	1.61
DIAL SCALE (Aluminum)	63063	7.07
FUSE HOLDER (Rear Panel)	69020-02	1.53
JACK, STEREO PHONE, OPEN CIRCUIT	95035	1.87
KNOB, TUNING	72134	4.00
KNOB, CONTROL	72135	1.87
KNOB, PUSH-BUTTON	72120-02	1.03
RECEPTACLE BOARD, 8 PHONO JACKS	95042-03	2.81
TERMINAL, SPEAKER, 4 SPRING POSTS	76003	1.93
TERMINAL, ANTENNA, 4 SCREW POSTS	76009	1.18
WOODEN CABINET ASSEMBLY (W/Grille)	74128	28.00

ORDERING REPLACEMENT PARTS

When ordering replacement parts, always include part numbers (see Parts List above).

When defective parts are retuened for replacement under warranty (Authorized Service Stations only) include a list by part number and value, of the part returned. Request either credit or replacement parts.

The returning of entire circuit boards for replacement is not covered by the warranty except where component failure has resulted in physical damage to the board itself.

If a set or board cannot be repaired, return the complete receiver to the Sherwood Factory Service Laboratory, 4300 N. California Ave., Chicago, IL 60618. Include a complete description of the malfunction.

SHERWOOD ELECTRONIC LABORTORIES, INC., 4300 N. CALIFORNIA AVE., CHICAGO, IL 60618 USA

(312)478-7300

Litho in USA 7/78

www.hifiengine.com

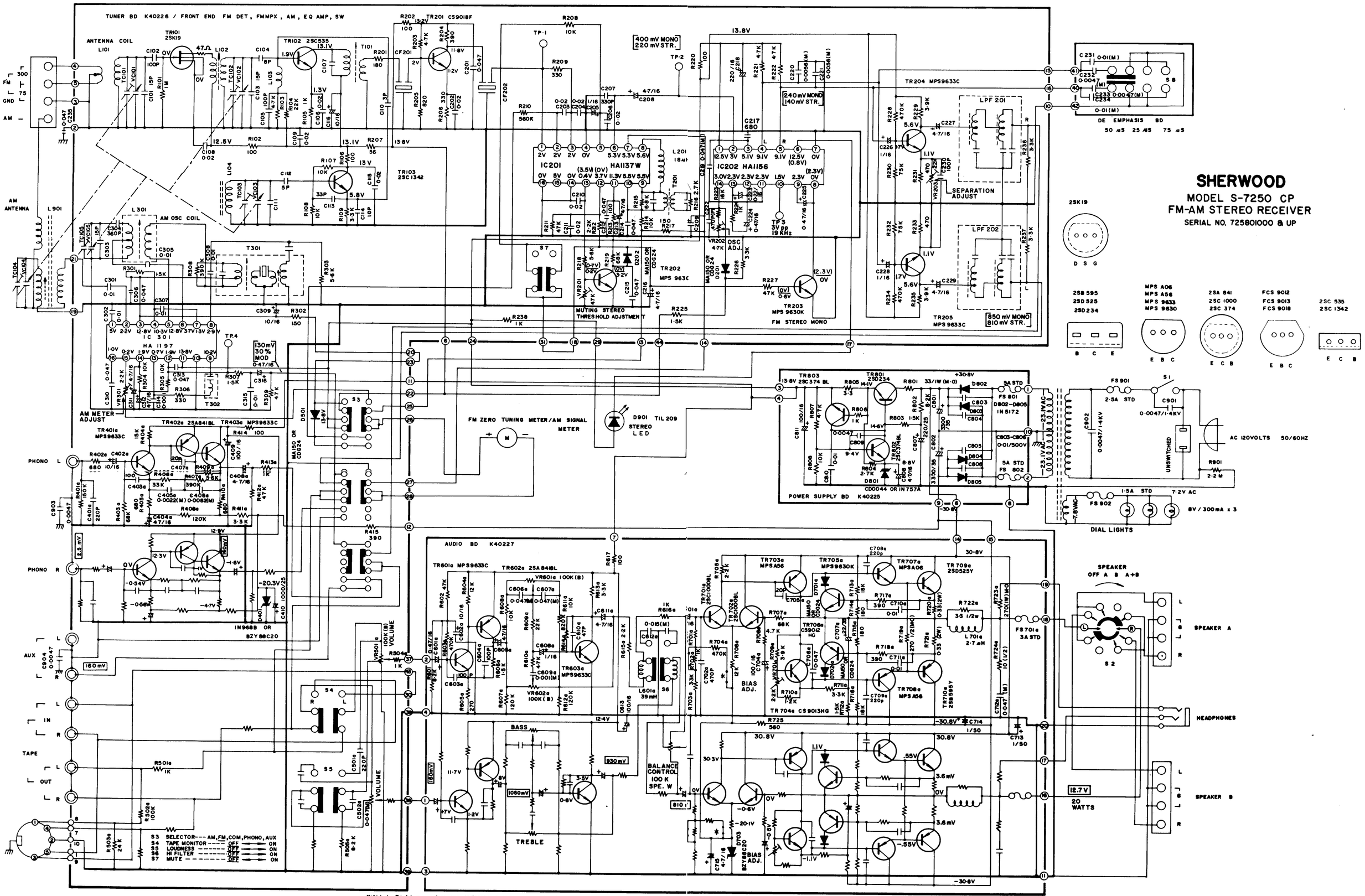

Note: 1. Resistance values are indicated in ohms unless otherwise specified (K=1,000, M=1,000,000)
2. Capacitance values are shown in microfarads unless otherwise noted. (P=micro—microfarads)
3. Component values are subject to change without notice.
4. MARKED ✱'s are for adjustment.
5. All voltages are referenced to ground under the following conditions:
( ) ..... DC: no signal except where indicated.
( ) ..... DC: 100μV FM stereo signal.
[V] ..... AC (at 1 KHZ, 8 ohm load, at rated output).
[ ] ..... STEREO or MONO audio (rms) with antenna inputs below:
FM MONO—100μV, L=R 100% modulation at 400Hz.
FM STEREO—100μV, Pilot 10%, L or R 90% modulation at 400Hz.
AM—5000μV/m, 30% modulation.

S-7250 CP

PRINTED CIRCUIT BOARD ASSEMBLIES

CIRCUIT BOARDS ARE SHOWN FROM THE COMPONENT SIDE; FOR A VIEW FROM THE COPPER SIDE, TURN THIS SHEET OVER AND HOLD UP TO A LIGHT.

SHERWOOD ELECTRONIC LABORATORIES, INC.
4300 NORTH CALIFORNIA AVENUE
CHICAGO, ILLINOIS 60618

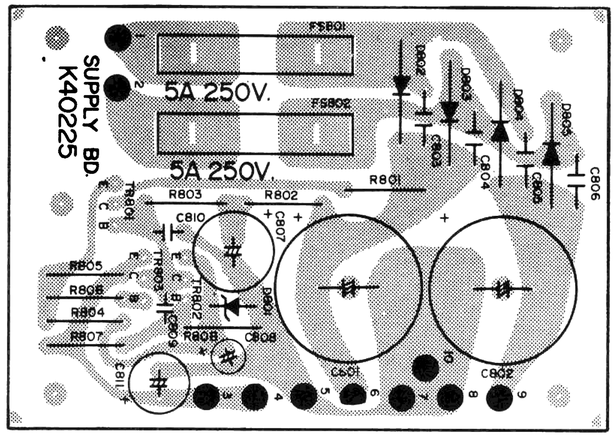

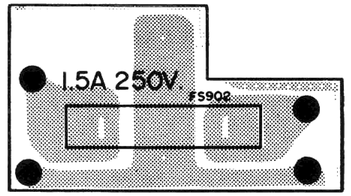

DIAL LIGHT
FUSE BOARD

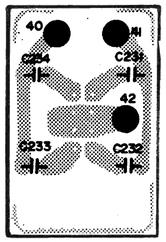

FM
DE-EMPHASIS
BOARD

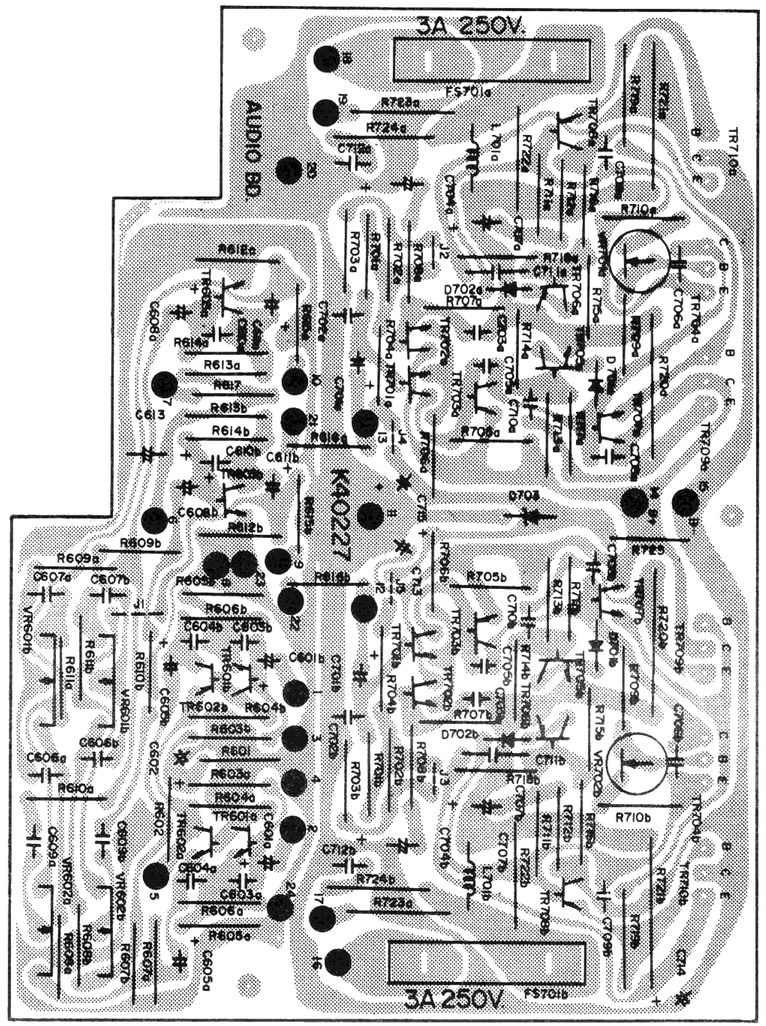

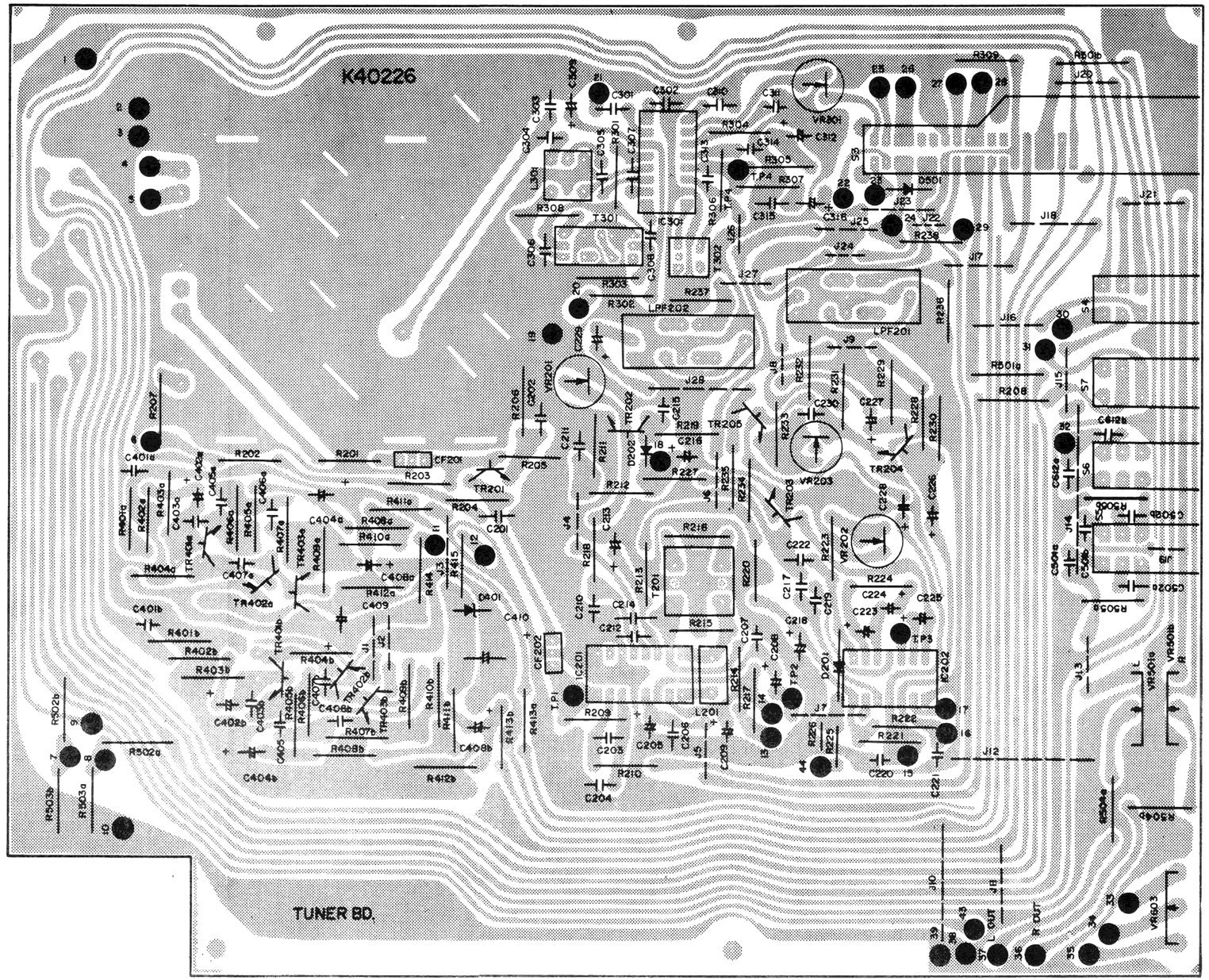

PRINTED IN U.S.A.

SHERWOOD ELECTRONIC LABORATORIES, INC.
4300 NORTH CALIFORNIA AVENUE, CHICAGO, ILLINOIS 60618

www.hifiengine.com