SHERWOOD MODEL S-7210

AM/FM STEREO
DYNAQUAD RECEIVER
SERVICE MANUAL

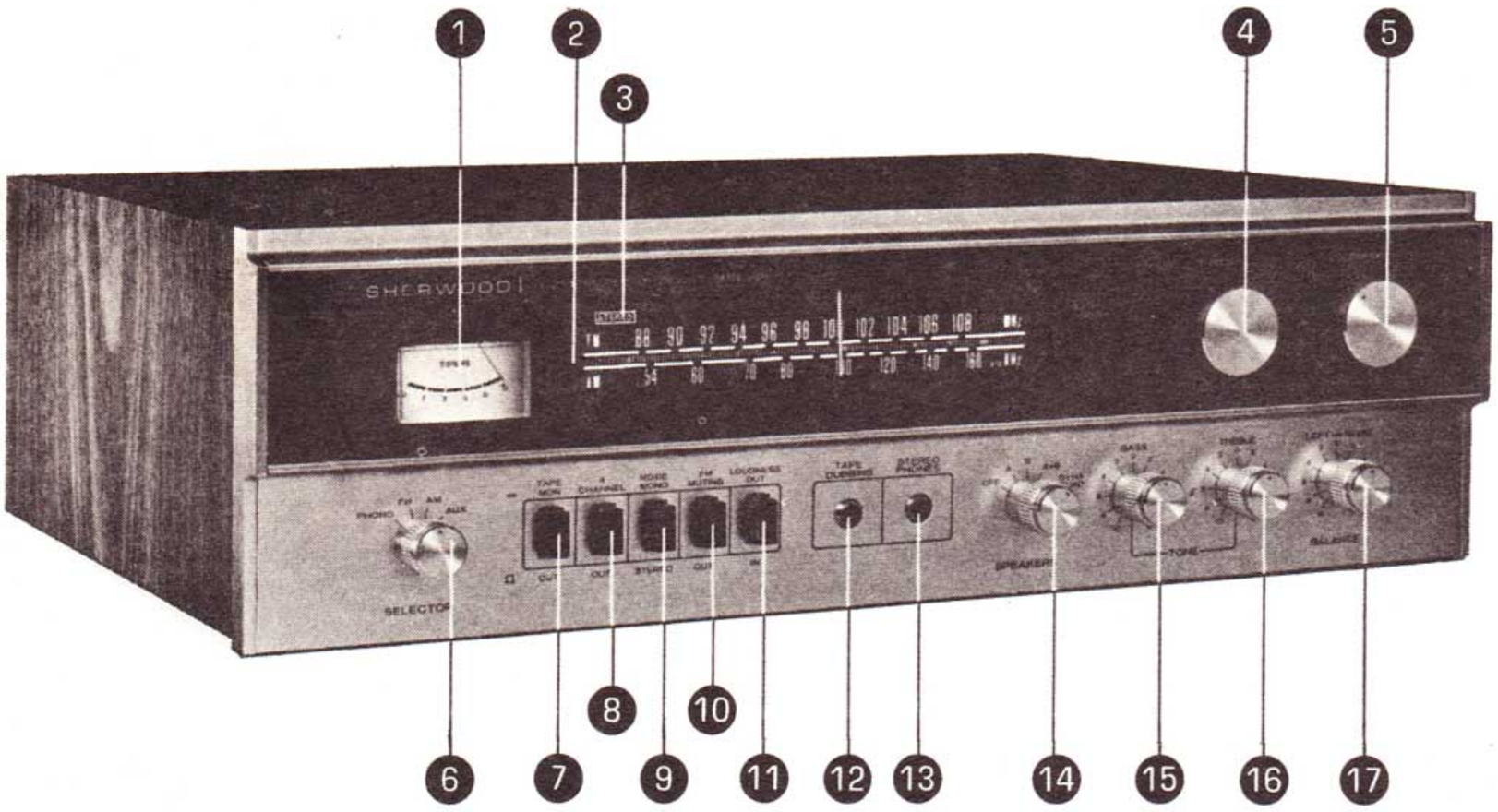

1 Tuning Meter
For precise tuning.

2 Tuning Scales
FM band in MHz; AM band in KHz.

3 Stereo Indicator
Indicates multiplex FM stereo broadcasts.

4 Tuning
Counterbalanced for easy tuning.

5 Loudness
Master power ON/OFF and volume control for your speakers. Also automatically adds bass compensation at low levels when the Loudness switch is used.

6 Selector Control
Selects your listening source: Phono, FM, AM, AUX.

7 Tape Monitor
Permits monitoring during tape recording.

8 4-channel
For connecting 4-channel decoder [also doubles as 2nd Tape Montr.].

9 Mode
Depress for Mono listening.

10 Muting
Removes FM interstation noise.

11 Loudness
Defeats loudness control compensation circuit.

12 Tape Dubbing
Permits recording to, or playback from a second recorder. Also, dubbing from one recorder to the other.

13 Stereo Phones
For private listening with headphones.

14 Speakers [Dynaquad]
Selects main speakers [A], remote speakers [B], both sets [A & B], or turns speakers off [for headphone listening]. Also activates Dynaquad 4-channel Matrix circuit.

15 Bass
Increases bass tones up to +14dB, decreases to -14dB at 50 Hz.

16 Treble
Increases treble tones up to +12dB, decreases to -12dB at 15 KHz.

17 Balance
Balances the relative volume levels between your right and left speakers.

SHERWOOD S7210 SPECIFICATIONS

Amplifier:

RMS POWER OUTPUT, both channels driven:
36 watts x 2 @ 4 ohms, 1 KHz.
32 watts x 2 @ 8 ohms, 1 KHz.
30 watts x 2 @ 8 ohms, 40-20,000 Hz.
26 watts x 2 @ 8 ohms, 20-20,000 Hz.

HARMONIC DISTORTION:
0.6% @ 8 ohms rated output.
0.15% @ 10 watts.

INTERMODULATION DISTORTION:
0.8% @ 8 ohms rated output.
0.2% @ 10 watts.

STEREO & MONO SPEAKER OUTPUT IMPEDANCE: 4, 8 or 16 ohms.

STEREO HEADPHONE OUTPUT:
High or low impedance.

STEREO RECORDING OUTPUT: 200 mV.

POWER BANDWIDTH: 8-50 KHz. 0.8% Dist.

FREQUENCY RESPONSE:
Auxiliary, 20-20,000 Hz. ± 0.5dB.
Phono, RIAA Standard ± 1dB.

DAMPING FACTOR: 30:1 @ 8 ohms.

BASS CONTROL: ± 14dB @ 50 Hz.

TREBLE CONTROL: ± 12dB @ 15 KHz.

INPUT SENSITIVITY [for rated output]:
Phono, 2.0 mV.
Auxiliary, 220 mV.

INPUT CAPABILITY for ½% distortion:
Phono, 100 mV.
Auxiliary, greater than 10V.

HUM AND NOISE:
Phono, -65dB.
Auxiliary, -80dB.
Volume Control Minimum, -85dB.

CROSSTALK: -40dB @ 20-20,000 Hz.

Tuner [FM]:

FM SENSITIVITY [IHF]:
1.9 uV [-30dB noise and distortion].

SIGNAL TO NOISE RATIO: -68dB.

CAPTURE RATIO: 1.4dB.

SUPPRESSION OF AM: -60dB.

TUNING RANGE: 87.5 to 108.5 MHz.

DISTORTION:
Mono, 0.3% @ 100% Modulation.
Stereo, 0.6% @ 100% Modulation.

SPURIOUS RESPONSE REJECTION: -90dB.

IMAGE REJECTION: -70dB.

AUTOMATIC STEREO THRESHOLD: 5 uV.

IF REJECTION: -85dB.

ALTERNATE-CHANNEL SELECTIVITY: 65dB.

STEREO SEPARATION: 40dB @ 1 KHz.

FREQUENCY RESPONSE:
20-15,000 Hz. ± 1 dB [Stereo].

ANTENNA: 300-ohm balanced.

Tuner [AM]:

SENSITIVITY [IHF]:
20 uV. [30% Modulation for 10dB S/N]

SELECTIVITY: ± 10 KHz, 25dB.

FREQUENCY RESPONSE: 4 KHz [-6dB].

TUNING RANGE: 530 to 1625 KHz.

IMAGE REJECTION: -40dB @ 1 MHz.

ANTENNA: Ferrite Rod [Rotatable].
High Input Impedance.

General:

POWER REQUIREMENTS: 115-125 Volts, 50/60 Hz.
[Export Model, 230V] 2 Amp, 20-180 watts fused.

AC OUTLET: 100 watts switched.

FUSES: Power Fuse 3 Amp, 3AG. Speaker Fuses 2.5 Amp, 3AG. Do not use Slo-Blo Fuses.

DIMENSIONS [Overall]: 17½" W x 5½" H x 13¼" D.

SHIPPING WEIGHT: 28.5 lbs.

www.hifiengine.com

RECEIVER SERVICE INFORMATION

CONTENTS:

	PAGE:
PARTS LOCATIONS [Figure 1]	Inside Covers
AMPLIFIER SERVICING AND ADJUSTMENT	1
POWER SUPPLY SERVICING	4
FM TUNER AND IF ALIGNMENT	4
MULTIPLEX ALIGNMENT	5
AM TUNER AND IF ALIGNMENT	6
MECHANICAL DETAILS	6
Push-Button Repair	6
Dial Stringing	7
ORDERING PARTS	8
PARTS LIST [See Supplements]	
SCHEMATIC DIAGRAM [See Supplements]	

-- -- -- -

SUGGESTED AMPLIFIER TEST BENCH SET-UP

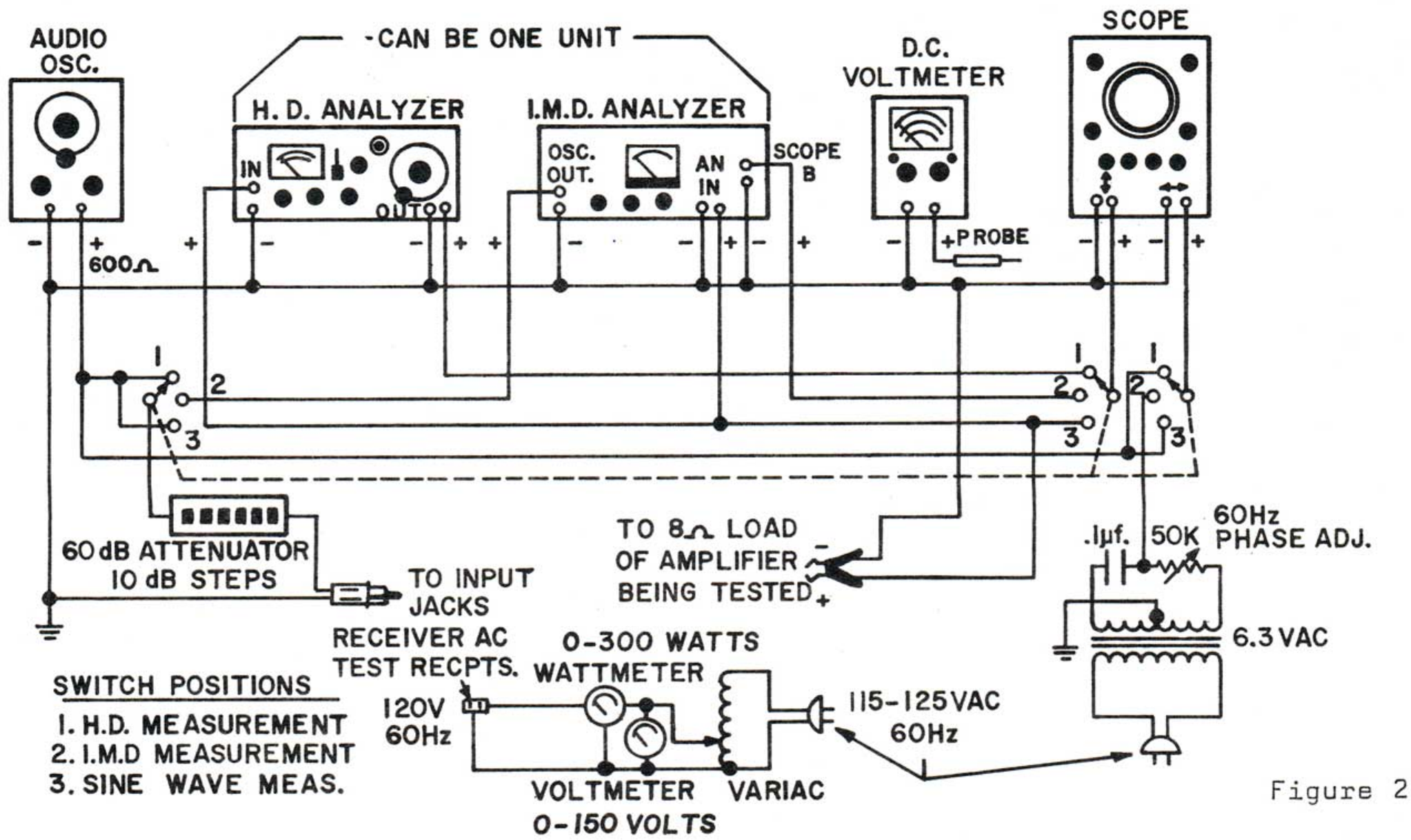

Figure 2

AMPLIFIER FAULT ANALYSIS:

If an amplifier channel is suspected, check circuit boards for burned parts and replace. Check all the transistors [TR601-610] with an ohmmeter, for opens or shorts and replace if defective.

WARNING: Some ohmmeters may damage sensitive solid-state devices. Whenever possible, use a high resistance range [at least RX10].

Use the centerpoint voltage [measured from the + speaker terminal to ground] as a guide. The centerpoint voltage should always be Zero ± 50mV. Any deviation suggests shorted or open devices.

If channel operation is still faulty, verify that there are no shorted capacitors, open resistors, etc., on the board.

Inspect the underside of the board for shorted pads, broken connections, etc.

When board is restored, readjust Output Bias [see below].

DISTORTION IN AMPLIFIER OUTPUT:

Distortion which exceeds the amplifier ratings (see Front Cover) may be due to the following:

1. Mismatched output transformers.
2. Defective (low-beta) driver transformers.
3. Incorrectly adjusted output transistor bias.

OUTPUT TRANSISTOR BIAS ADJUSTMENT:

Correct bias adjustment insures cool, low-distortion operation. Bias readjustment is necessary if any driver or output transistor is replaced, or the amplifier exhibits one or more of the following symptoms:

1. Overheating of the output transistors under normal operating conditions.
2. Excessive low level Intermodulation or Harmonic Distortion [more than 0.3% at 3.0 volts across 8 ohms].

www.hifiengine.com

The following are three methods for adjusting output transistor bias:

BIAS ADJUSTMENT USING AN INTERMODULATION DISTORTION [I.M.D.] ANALYZER:

1. Connect the receiver for testing similar to Figure 2.
2. Connect an Intermodulation Distortion Analyzer with a ratio of 4:1, using 60Hz and 7000Hz, to the receiver AUX 1 input and set the SELECTOR switch to AUX 1.
3. Set the volume control to maximum and adjust the generator for a receiver output of 3.0 volts across the 8 ohm load of the amplifier channel under test.
4. While observing the resultant distortion waveform, adjust bias potentiometer [VR601a] so that the crossover distortion is at a point of being eliminated [Class "AB"]. NOTE: Class "AB" operation [continued CW rotation] causes output transistors to overheat and draw excessive current. Refer to Figure 3 below.
5. Repeat Step 3 and 4 for the opposite channel.

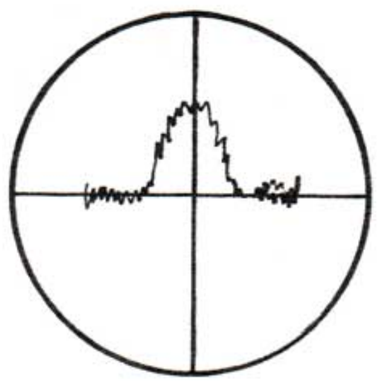

Improper Bias Adjustment

Proper Bias Adjustment

Figure 3

The following performance indicates a properly operating amplifier with both channels driven into 8 ohm loads:

1. Less than 0.3% Intermodulation Distortion [IMD] at 3.0 V., [typically 0.1%].
2. 30 watts output per channel at 0.8% IMD.

BIAS ADJUSTMENT USING HARMONIC DISTORTION ANALYZER:

1. Connect the receiver for testing similar to Figure 2.
2. Connect an oscillator with less than .05% distortion at 1KHz to the receiver AUX 1 input and set the SELECTOR switch to AUX 1.
3. Set the volume control to maximum and adjust the oscillator for a receiver output of 3.0 volts across the 8 ohm load of the amplifier channel under test.
4. Using the Harmonic Distortion Analyzer looking at the distortion of the receiver, properly nulled, make the adjustment as follows: Adjust the bias for Class "AB" operation by turning the bias potentiometer [VR601a] so that the crossover is at a point of being eliminated. NOTE: Class "A" operation [continued CW rotation] causes the output transistors to draw excessive current and overheat. Refer to Figure 4 below.
5. Repeat Steps 3 and 4 for the opposite channel.

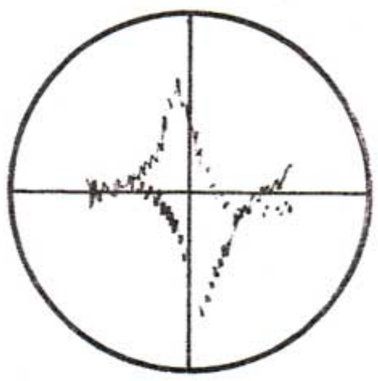

Improper Bias Adjustment

Proper Bias Adjustment

Figure 4

www.hifiengine.com

The following performance indicates a properly operating amplifier with both channels driven into 8 ohm loads:

1. Less than 0.1% THD at 3.0 volts, [Typically 0.05%].
2. 30 watts per channel at 0.8% THD [40-20KHz].
3. 32 watts of power per channel at 0.9% THD [1KHz].

BIAS ADJUSTMENT USING LINE WATTMETER:

1. Turn the loudness control to minimum.
2. Adjust the bias potentiometers [VR601a & VR601b] one at a time, to the point at which the receiver begins to cause a very slight increase in line wattage consumption.

POWER SUPPLY SERVICING AND FAULT ANALYSIS

Power supply malfunctions are usually due to shorted or open diodes [D801-804] or a defective power transformer.

The transformer's operation may be checked by measuring secondary voltages with the associated circuit legs disconnected. Shorted windings can cause abnormal power consumption in a unit that otherwise functions well.

FM TUNER AND IF ALIGNMENT (refer to Figure 1 for parts locations)

1. Set the SELECTOR switch to FM. Connect an FM Generator to the 300 ohm antenna terminals using a matching network, if necessary, as shown below [Figure 5].

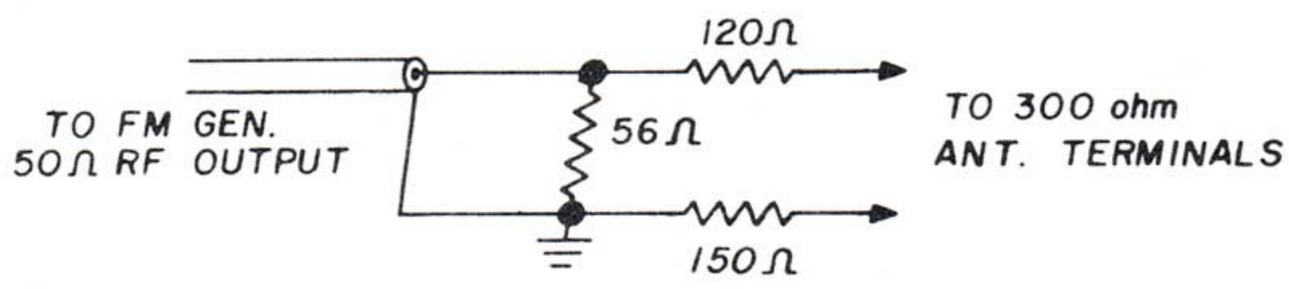

Figure 5

2. Tune the receiver to a point of no signal or interference near 90MHz.
3. Tune the FM Generator, modulated ±300KHz at approximately 20uV output level, to the receiver frequency. Connect an RF Detector Probe to Pin 5 of the AN217 [IC202] and center the FM IF response on the oscilloscope. The FM IF bandpass characteristics are now displayed. Adjust the transformer core of the RF Converter [T101] for maximum gain and symmetry [Figure 6].

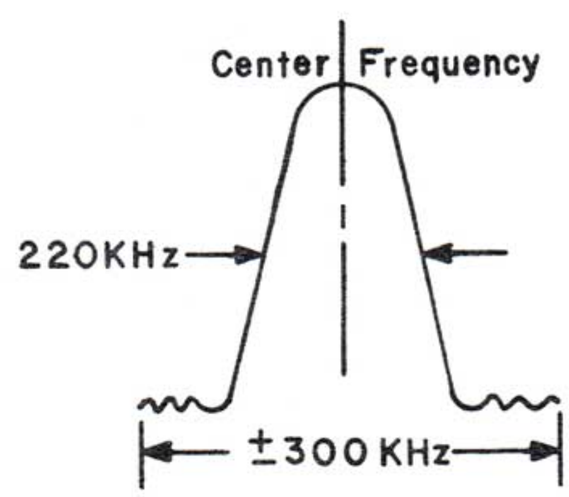

Figure 6

4. The FM front end alignment can also be determined while observing the oscilloscope display of Step 3. Tune the receiver and generator to a point of no interfering signal near 90MHz. Check that the receiver dial pointer indicates within ±100KHz from the generator frequency. (If the generator output frequency is not accurately calibrated, a FM station can be used as a calibration reference). If the dial deviation exceeds 100KHz, adjust the local oscillator coil [L103] slightly, until optimum dial calibration is obtained. Next, adjust the RF amplifier coils [L101 and L102] for maximum gain. Tune the receiver and the generator to a point of no signal

www.hifiengine.com

or interference near 106MHz. Check the dial calibration. If required, adjust the local oscillator trimmer [TC103] until optimum dial calibration is obtained. Now, adjust the RF amplifier trimmers [TC101 & 102] for maximum gain. Repeat alignment at 90MHz and 106MHz until no further improvement is obtained.

5. DETECTOR ALIGNMENT USING OSCILLOSCOPE: To align the FM Detector, leave the FM Generator connected as in Step 1, and move the oscilloscope lead to the REC output jack on the rear panel. Reduce the modulation to ±75KHz. Adjust the top core of the detector transformer [T201] for 0 DC reading on a voltmeter connected across C222 or connect direct to the 4-Channel output jack. The bottom core of the transformer [T201] is adjusted for best gain and linearity as observed on the oscilloscope [see Figure 7]. Recheck the voltmeter 0 voltage reading and readjust the top core again, if necessary.

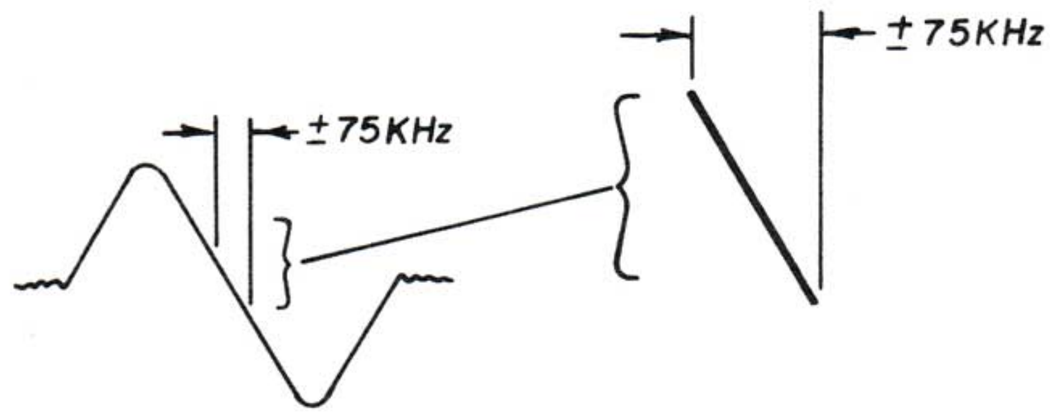

Figure 7

6. DETECTOR ALIGNMENT USING HARMONIC DISTORTION ANALYZER: A Distortion Analyzer should be used in conjunction with an oscilloscope to obtain the best linearity, using 400Hz at ±75KHz modulation. Fine adjust the bottom core of the detector transformer [T201] for the lowest distortion (slight adjustment only).

7. MUTING/STEREO THRESHOLD ADJUSTMENT: This receiver is equipped with a muting circuit which automatically removes or reduces the noise (rushing sound) normally heard between broadcast channels on highly sensitive FM receivers. The noise threshold level in this electronic circuit can be adjusted with the Muting Threshold control [VR201] located on the FM IF board. Normal threshold level is 5 microvolts.

   To adjust the muting sensitivity, connect the FM Generator and oscilloscope as in Step 5 of the FM Alignment. With the MUTING switch in, slowly increase the generator output from zero to the automatic muting threshold level. Audio can now be obesrved on the oscilloscope. The desired threshold level can be set by adjusting VR201 and repeating the above.

MULTIPLEX ALIGNMENT

NOTE: The FM IF must be properly aligned before attempting the multiplex alignment.

1. Set up the equipment as shown in Figure 8. Set the composite generator for pilot only. The oscilloscope is connected to Pin 1 of AN211 [IC301].

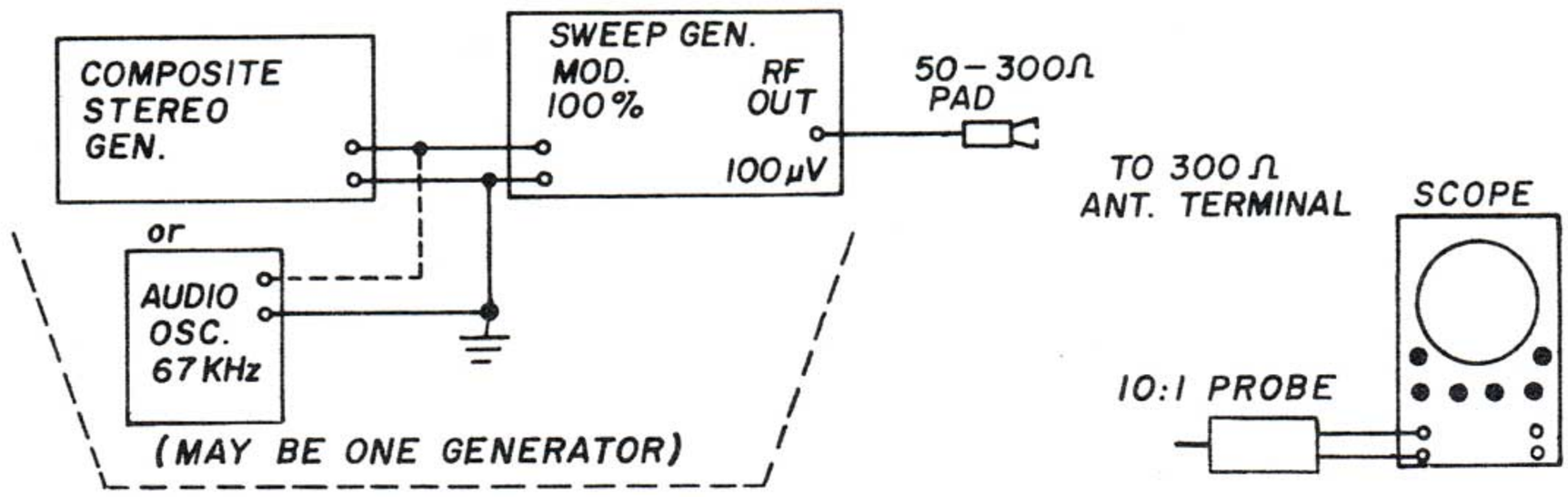

Figure 8

2. Tune the receiver to a point of no signal interference near 90MHz and tune the sweep generator to this frequency and adjust it for an unmodulated signal at 100uV output.

3. Adjust transformer T301 [black core] for maximum 19KHz signal at Pin 1 of IC301, [approximately 2.4 V P-P).

4. Connect the oscilloscope to Pin 3 of IC301. Adjust transformer T301 [yellow core]

www.hifiengine.com

for maximum 38KHz signal (approximately 1.9 V P-P).

5. To align for minimum multiplex distortion, proceed as follows: NOTE: This step requires a LOW DISTORTION FM Generator, an accurate Harmonic Distortion Analyzer and a low pass filter. If this equipment is not available, omit this step.

   Set the composite multiplex generator to 400Hz Left Channel only, making sure the receiver is correctly tuned to the sweep generator frequency. Connect the low pass filter to the Left Channel Record Output jack and the harmonic distortion analyzer to the output of the low pass filter. Adjust the 38KHz coil [T301 - yellow core] for minimum distortion. Only a slight adjustment should be necessary.

6. To adjust multiplex separation, use a stereo test signal and adjust VR301 for best total separation and minimum difference in left to right and right to left separation. The separation should be 40dB minimum with reference to 100% modulated audio signal at 1KHz.

7. If 40dB is not obtainable, apply pilot signal only and check the left and right multiplex outputs for 19KHz/38KHz residual. It should be a minimum of -50dB below audio reference.

AM TUNER AND IF ALIGNMENT

1. Set the receiver SELECTOR switch to AM. Tune the receiver to a point of no signal or interference near 600KHz. Connect the oscilloscope/VTVM to the REC output jack. Connect the AM Generator output to the receiver AM Antenna terminal through a 330 ohm resistor.
2. Adjust the AM Generator to 455KHz RF output, modulated 400Hz, at 50%. Tune the AM Converter/AM IF [T401] cores and the 2nd AM IF [T402] core for maximum audio output.
3. Adjust the AM Generator for 600KHz. If required, adjust the AM Oscillator [L401] so that the generator signal is received by the receiver at 600KHz, as indicated on the dial scale. Adjust the Rod Antenna core [L451] located at the end of the antenna rod assembly for maximum output as indicated on the oscilloscope/VTVM.
4. Tune the receiver and generator to a point of no interfering signal near 1400KHz. Check the dial calibration and if necessary, adjust the AM oscillator trimmer [TC105] for optimum dial calibration. Adjust the Antenna trimmer [TC104] for maximum output.
5. Repeat Steps 3 and 4 until no further improvement is obtained.

MECHANICAL DETAILS

PUSH-BUTTON REPAIR PROCEDURE:

To repair a defective section of the push-button assembly, proceed as follows:

1. Each button may be disassembled individually.
2. Remove the push-button cover.
3. Hold your finger on the plunger so that the plunger can not push outward and by using a long nose pliers, move the plunger spring away from the switch body until the locking pin can be removed.
4. Remove the locking pin and slowly release the push-button plunger and remove it from the assembly.
5. Locate the malfunction and repair the defective part by reference to the push-button detail for disassembly and reassembly of the various sections. [See Figure 9].
6. Replace the plunger spring and insert the push-button plunger into the switch assembly holding it in, to about the normal out position.
7. Carefully grasp the locking pin at its front edge with long nose pliers and slowly compress the plunger spring until the locking pin can be inserted in the switch body.
8. Replace the spring, being careful of correct assembly.
9. Replace the push-button cover.

www.hifiengine.com

A - PUSH-BUTTON
B - PUSH-BUTTON SHAFT
C - CONTACT SPRINGS
D - CONTACTS
E - SPRING
F - FRAME
G - SWITCH BODY
H - LOCKING PIN

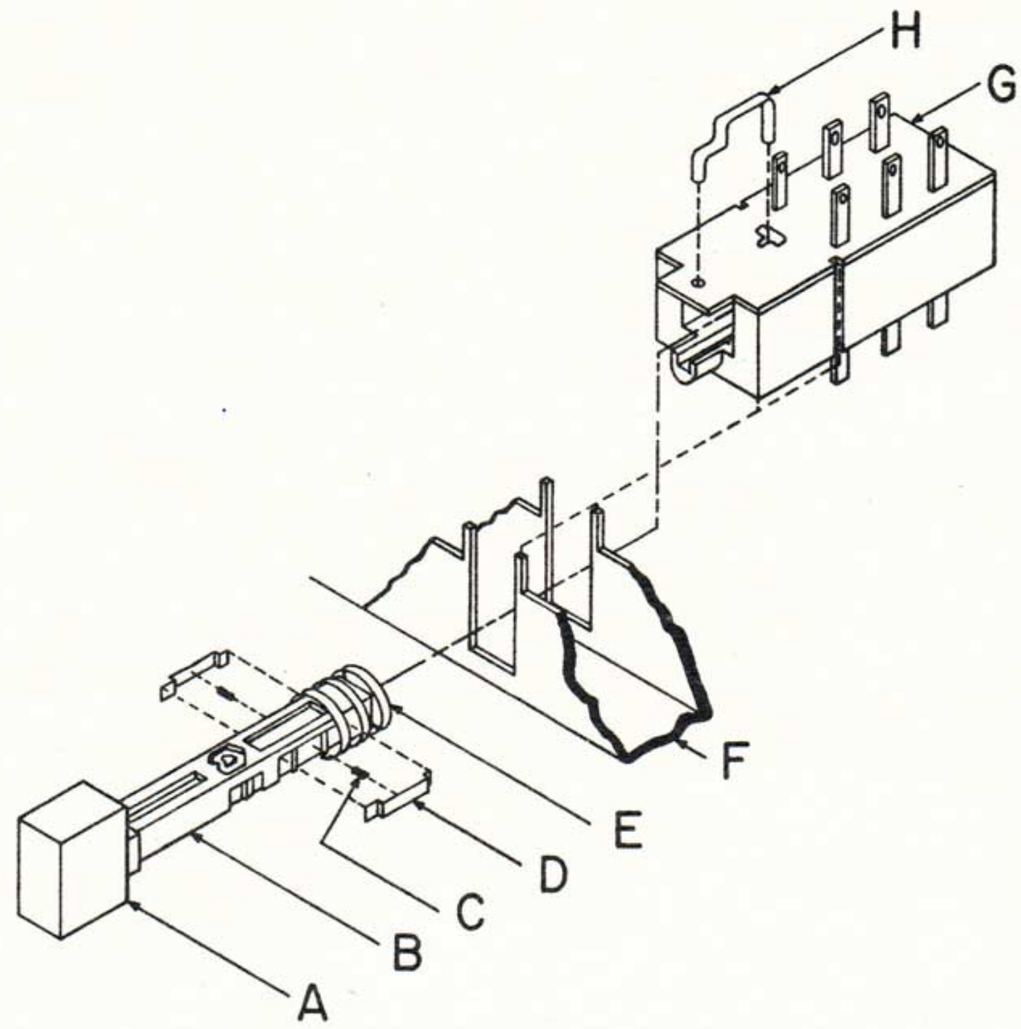

Figure 9 PUSH-BUTTON SWITCH DETAIL

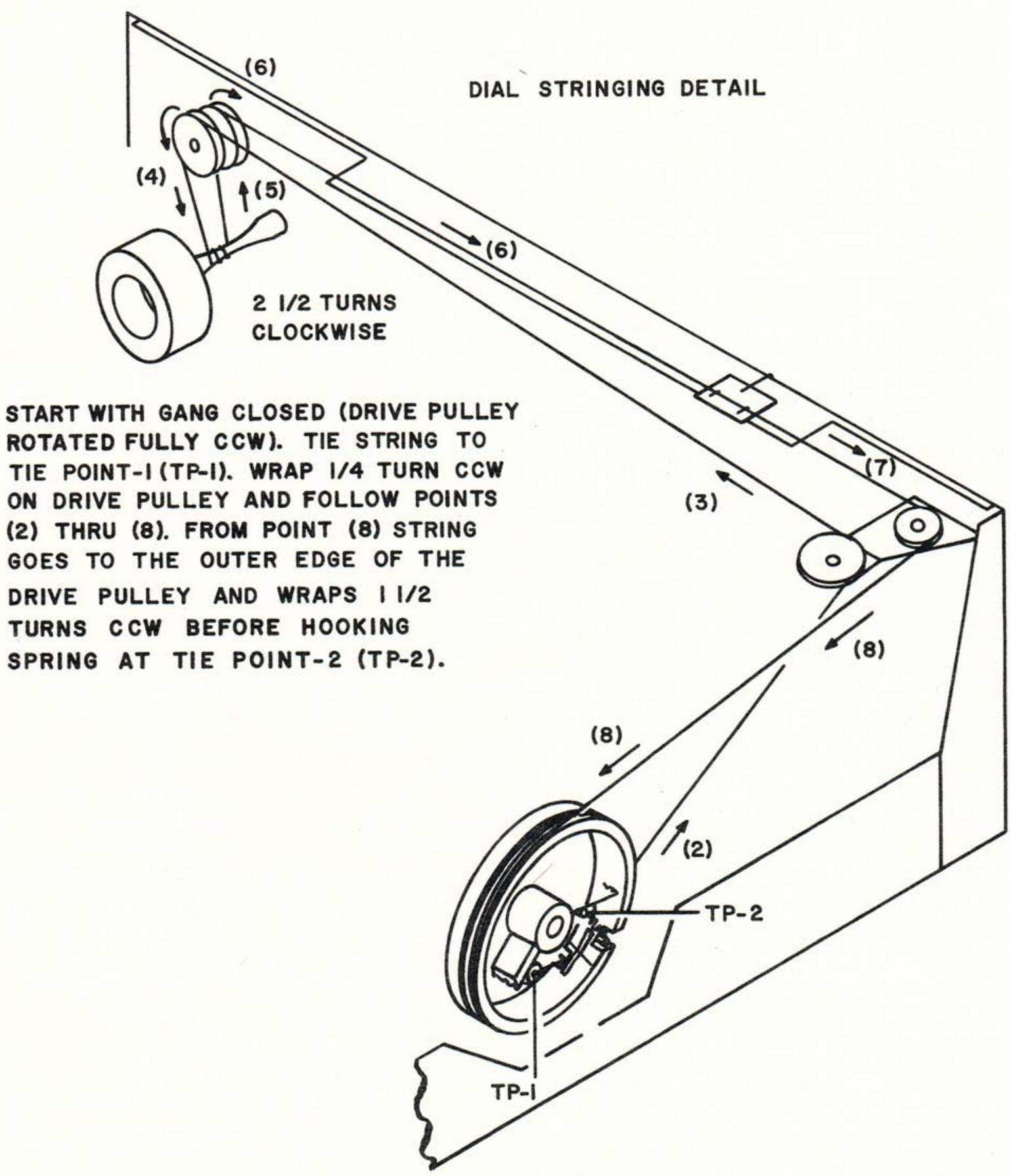

DIAL STRINGING DETAIL

ORDERING PARTS

When ordering replacement parts, always include part numbers (see Parts List).

When defective parts are returned for replacement under warranty (Authorized Service Stations only) include a list, by part number and value, of the parts returned. Request either credit or replacement parts.

The return of entire circuit boards for replacement is normally not covered by warranty, except in case where component failure has resulted in physical damage to the board itself.

If a set or board cannot be repaired, return the complete receiver to Sherwood Factory Service Laboratory, 4300 North California Avenue, Chicago, Illinois 60618. Include a description of the malfunction.

- N O T E S -

www.hifiengine.com

SHERWOOD MODEL S-7210 REPLACEMENT PARTS LIST

ALL PRICES ARE SUBJECT TO CHANGE WITHOUT NOTICE

TRANSISTOR'S, FET'S	REFERENCE NO.	PART NO.	LIST PRICE
2SA640K	TR601a,b; 602a,b	30000241	$ .98
2SA678	TR504	30000302	.91
2SA733	TR206, 207, 208, 209, 301, 303, 304, 606a,b	30000423	.98
2SA763WL	TR510a,b	30000331	.98
2SA777	TR608a,b	30000373	1.95
2SB511B	TR801	30100031	2.60
2SC693F	TR901a,b; 902a,b	30200124	.91
2SC710C	TR201, 203	30200381	.72
2SC710D	TR202	30200382	.72
2SC839	TR103	30200832	.67
2SC945	TR204, 205, 210, 605a,b	30200522	.65
2SC1000GR	TR502a,b	30200710	.91
2SC1364	TR503	30200862	.59
2SC1509R	TR603a,b; 607a,b	30200963	1.89
2SC1539	TR604a,b	30200921	.86
2SD188 [Output]	TR609a,b; 610a,b	30300240	5.62
3SK45 [FET]	TR101, 102	30400071	3.97

INTEGRATED CIRCUITS

AN211	IC301	30900180	5.59
AN217	IC202	30900170	5.46
BA401	IC201	30900230	1.95

DIODES, SIGNAL, POWER & ZENER

1N60	D205, 209, 401, 601a,b; 602a,b	30600010	.31
1N60P	D201, 202, 203, 207, 208	30600011	.31
1S2473	D301, 302	30600410	.31
RD12E [12VZ, 400 mW]	D603, 805	30600650	.91
V03C [1.3A, 200 PIV]	D801, 802, 803, 804	30600040	.70

ELECTROLYTIC CAPACITOR'S [PC unless otherwise specified]

0.47 @ 50V	C318, 319, 405 412	64045474	.33

ELECTROLYTIC'S (Cont)	REFERENCE NO.	PART NO.	LIST PRICE
1 @ 50V	C224, 230, 310, 311, 403, 505a,b; 601a,b; 901a,b; 902a,b	64045105	$ .33
3.3 @ 25V	C229, 305	64043335	.45
4.7 @ 16V [Tantalum]	C501a,b	66062475	1.00
4.7 @ 25V	C219, 304, 611, 906a,b	64043475	.71
10 @ 16V	C302, 303, 309, 320, 401, 410	64041476	.44
10 @ 16V [Axial]	C309	64142106	.62
10 @ 25V	C506a,b; 514,	64043106	.47
22 @ 6.3V	C503a,b	64040226	.41
33 @ 6.3V	C504a,b; 604a,b	64040336	.48
33 @ 16V	C807, 808	64042336	.50
33 @ 25V	C512, 513	64043336	.52
33 @ 35V	C605a,b	64044336	.70
47 @ 10V	C210	64041476	.43
100 @ 6.3V	C306	64040107	.54
100 @ 10V	C207	64041107	.56
100 @ 35V	C606a,b	64044107	.87
220 @ 25V	C908	64043227	.87
470 @ 25V	C909	64043477	1.02
1000 @ 10V	C301	64041108	1.10
3300 @ 35V	C805, 806	64144338	5.68

COIL'S & TRANSFORMER'S

COIL, FM ANTENNA	L101	#118A	35501181	1.09
COIL, FM RF	L102	#120B	35501202	1.25
COIL, FM OSCILLATOR	L103	#115L	35501156	.94
COIL, RF CHOKE, 1mH	L201	#102K	35500150	.52
COIL, 40 mH	L301, 302		35500250	1.17
COIL, AM OSCILLATOR	L401	#413L	35504136	.94
COIL, AM ROD ANTENNA	L451		35400371	4.39
COIL, RESISTOR WITH OVERWINDING	L601a,b; R627a,b		35500050	.94
TRANSFORMER, POWER	T1		35900162	48.60
TRANSFORMER, FM IF	T101	#204E	35702045	1.20
TRANSFORMER, FM IF	T201	#214D	35702144	2.65
TRANSFORMER, MPX	T301	#314A	35603141	4.44
TRANSFORMER, CERAMIC	T401	CFT-455B	35704061	3.35
TRANSFORMER, AM IF	T402	#401D	35704014	1.09

(Over)

ELECTRONIC COMPONENTS	REFERENCE NO.	PART NO.	LIST PRICE
CERAMIC FILTER [SFE10.7MA-8]	CF201a,b; 202	35300012	$1.80
FUSE, 2.5 AMP, 3AG	[Speakers]	31202.5	.23
FUSE, 3 AMP, 3AG	[Power Line]	312003	.23
METER, TUNING	M	60200010	7.14
PILOT LIGHT, 8V/0.25A	PL1, 2, 3, 4	37008019	.82
PILOT LIGHT, 8V/.05A	PL5 [Stereo Ind]	37008034	1.09
PILOT LIGHT, 8V/0.25A	PL6 [Fuse Type]	37008006	.88
POTENTIOMETER, 100K	VR651 [Balance]	28000092	2.98
POTENTIOMETER, 100K	VR652 [Loudness]	28000051	5.97
POTENTIOMETER, 100K	VR901, 902 [Tone]	28000093	2.98
SWITCH, ROTARY, SLIDE	SW1 [Selector]	27100099	7.30
SWITCH, 5 PUSH-BUTTON	SW2, 3, 4, 5, 6	27200060	6.45
SWITCH, ROTARY	S7 [Speakers]	27100098	5.20
TRIMMER CAPACITOR	TC103	26010023	.76
TRIMMER RESISTOR, 20K	VR201	28100075	.72
TRIMMER RESISTOR, 5K	VR301, 401	28100060	.66
TRIMMER RESISTOR, 1K	VR601a,b	28100059	.62
TUNING GANG, AM/FM	VC101	26250091	9.24

MECHANICAL COMPONENTS		
ESCUTCHEON ASSEMBLY	10147001	29.60
DIAL SCALE	20075001	4.20
DIAL STRING DRUM	21010001	.72
FLYWHEEL & SHAFT ASSEMBLY	23039001	4.65
DIAL POINTER, ILLUMINATED	25030001	3.85
KNOBS, SMALL, WITH INDICATOR	29066001	1.70
KNOB, LARGE, WITHOUT INDICATOR	29067001	1.40
KNOB, LARGE, WITH INDICATOR	29068001	1.48
KNOBS, PUSH-BUTTON, BLACK	29069001	.23
JACK, STEREO HEADPHONE (Open Ckt.)	33030400	1.20
RECEPTACLE BOARD, 5 PHONO JACKS	33050300	2.52
RECEPTACLE BOARD, 8 PHONO JACKS	33080600	3.57
LAMP HOLDER, FUSE TYPE	34001003	.94
FUSE HOLDER, LINE FUSE	34032001	1.81
FUSE HOLDER, DUAL [Speaker Fuses]	34045001	1.76
TERMINAL BOARD, 4 SCREWS [AM/FM Ant.]	53041600	2.28
TERMINAL BOARD, 8 SCREWS [Speakers]	53080230	4.80
AM ANTENNA ROD HOLDER, BLACK PLASTIC	63030001	.48
FEET, PLASTIC	74074001	.16
WOODEN CABINET	85054001	28.00
CARTON, SHIPPING WITH POLYFORMS	86146001	5.00

SHERWOOD ELECTRONIC LABORATORIES, INC., 4300 N. CALIFORNIA AVE., CHICAGO, ILLINOIS 60618 312-478-7300

Litho in USA 12/74

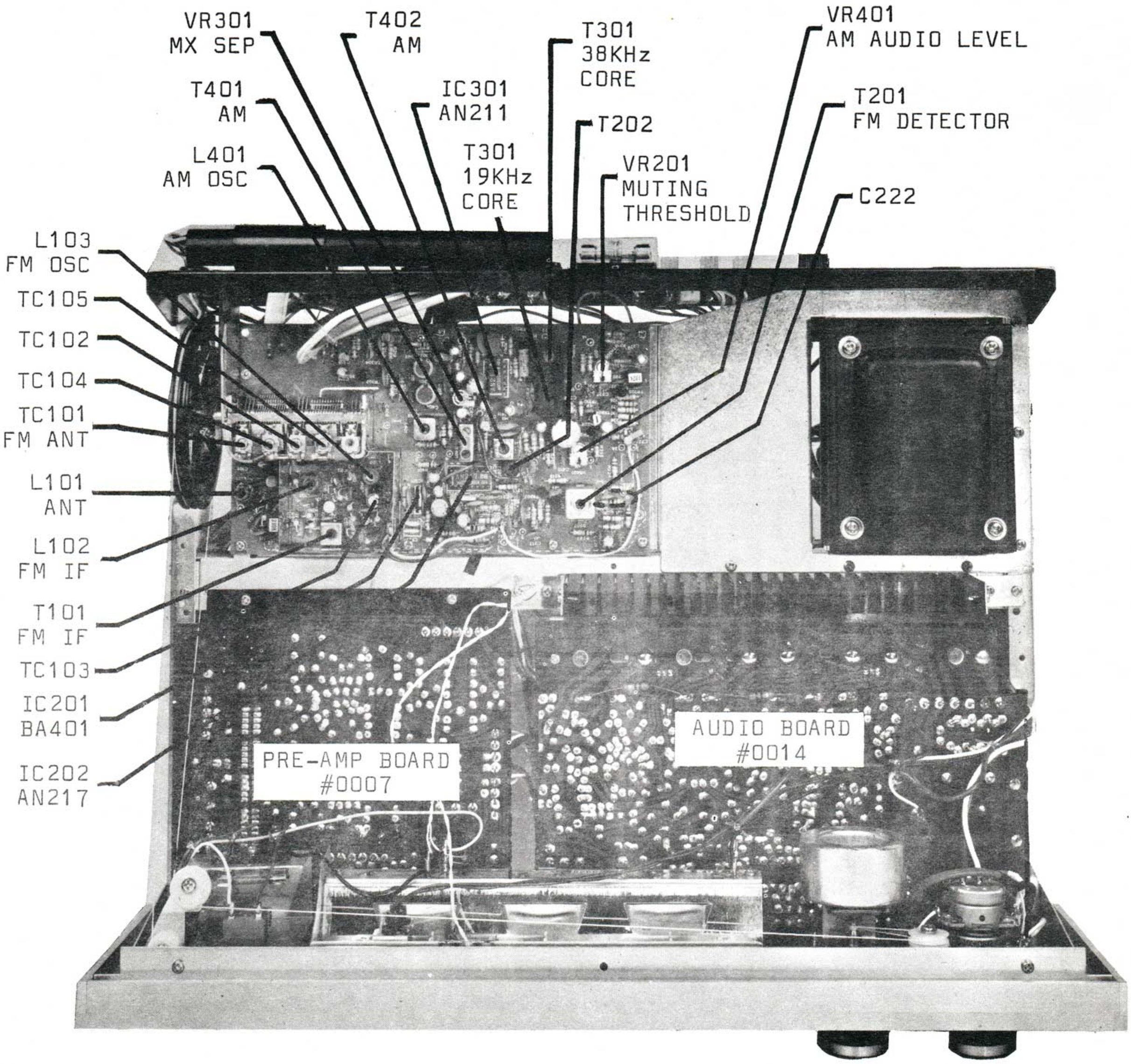

FIGURE 1 (TOP VIEW)

www.hifiengine.com

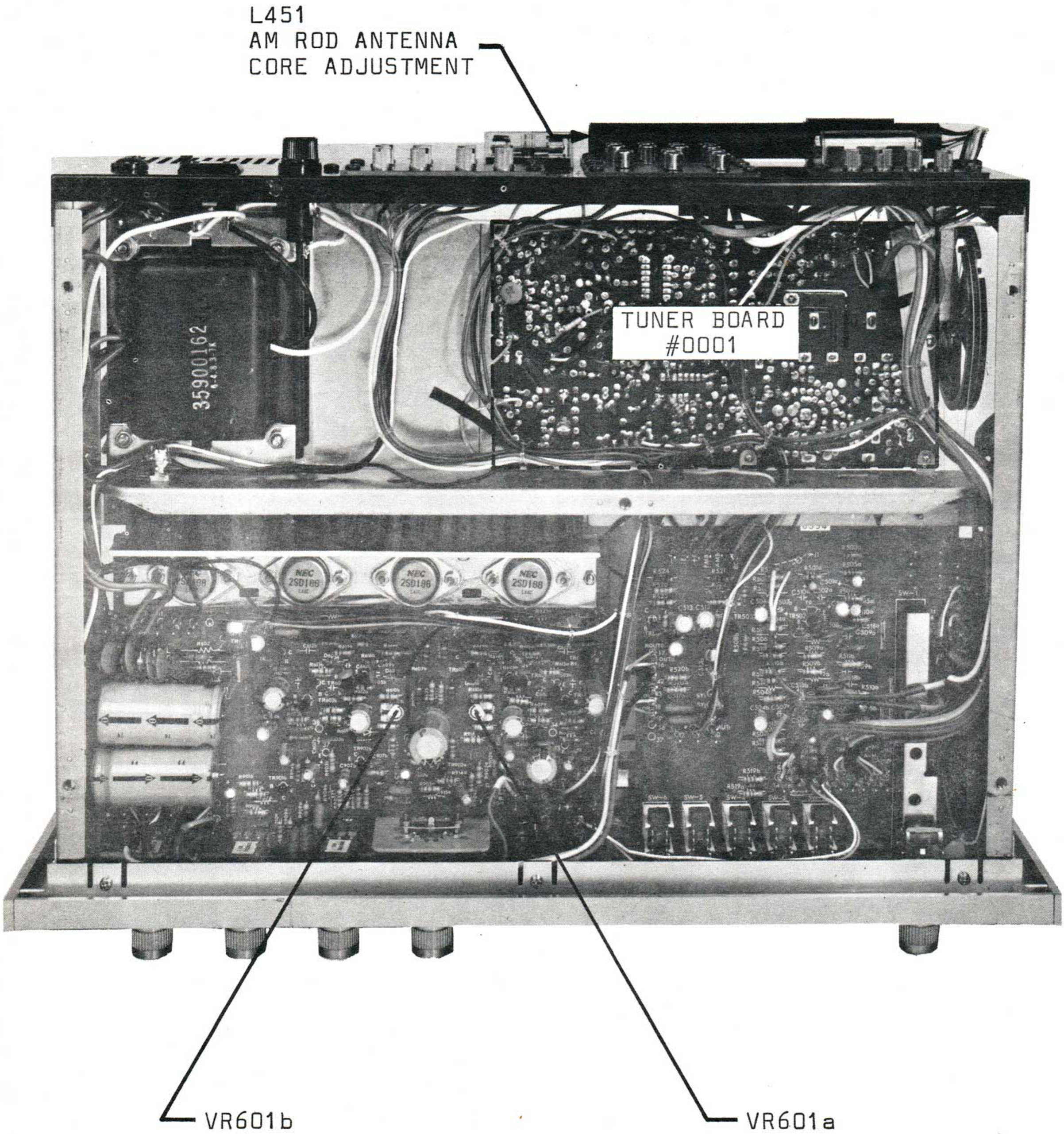

FIGURE 1 (BOTTOM VIEW)

SCHEMATIC DIAGRAM

SHERWOOD S-7210 AM/FM STEREO/ DYNAQUAD RECEIVER

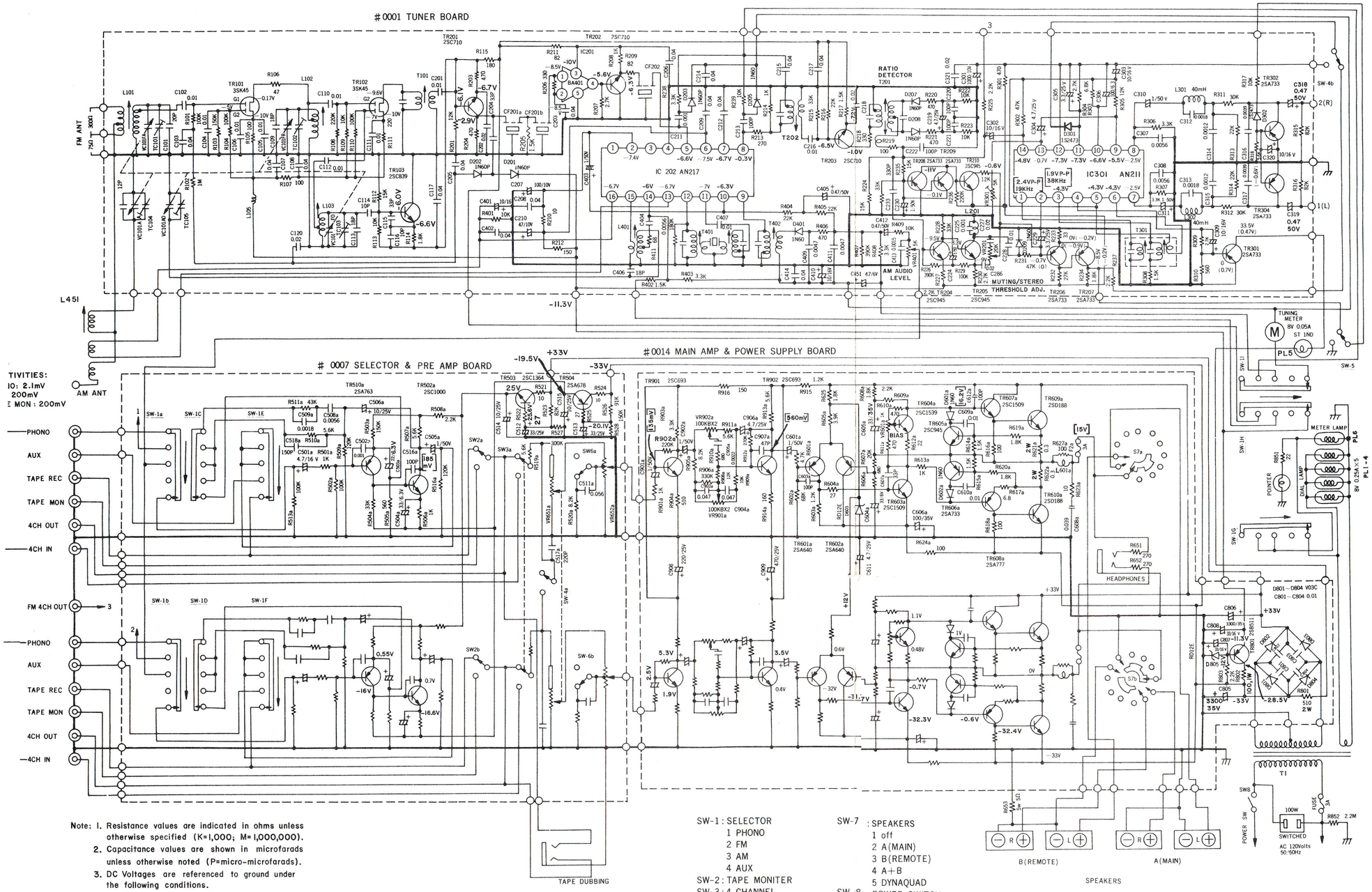

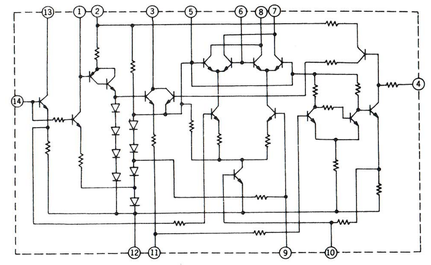

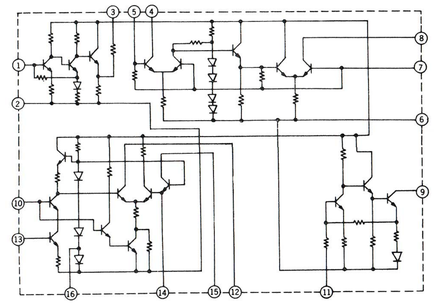

Note: 1. Resistance values are indicated in ohms unless otherwise specified (K=1,000; M=1,000,000).
2. Capacitance values are shown in microfarads unless otherwise noted (P=micro-microfarads).
3. DC Voltages are referenced to ground under the following conditions.
No signal.
( ) 1000μV FM Stereo signal.
AC Voltages [ ] are RMS unless otherwise indicated and are referenced to ground under the following conditions.
TUNER: 1000μV FM Stereo signal except where indicated, 400Hz, 100% Modulation.
AMPLIFIER: Signals at rated output with an 8 ohm load and volume control at maximum, 1KHz.

12-27-74 – 1-3-75

SW-1: SELECTOR
1 PHONO
2 FM
3 AM
4 AUX
SW-2: TAPE MONITER
SW-3: 4 CHANNEL
SW-4: MODE STEREO/MONO
SW-5: FM MUTING
SW-6: LOUDNESS

SW-7: SPEAKERS
1 off
2 A(MAIN)
3 B(REMOTE)
4 A+B
5 DYNAQUAD
SW-8: POWER SWITCH
VR 651: BALANCE CONTROL
VR 652: VOLUME "
VR 901: BASS "
VR 902: TREBLE "

S G1 D G2	B C E	B C E	E C B	B C E	B C E	B C E	B C E	(CASE) B E C	B C E
3SK45 3SK41	2SC1000 2SA493 2SC380	2SC1364 2SC1362	2SC710 2SC711	2SC693 2SC536 2SC930 2SC929	2SA763 2SC1222 2SC945 2SA733 2SA735 2SC839 2SC828 2SC900 2SC1509 2SA777	2SC1345	2SB511 2SB524	2SD188 2SD371 2SC1030 2SC1051	2SA678

ALTERNATE PRIMARY CIRCUITS FOR EXPORT MODELS.

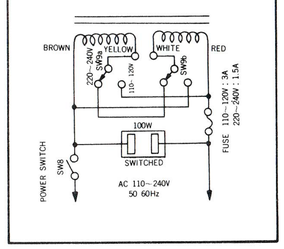

SUBSTITUTE TRANSISTORS & IC	
TR101, TR102	3SK41
TR103	2SC710, 2SC930
TR201, 202 203	2SC930, 2SC380, 2SC929
TR204, 205	2SC1364, 2SC711, 2SC828 2SC536
TR206, 207 301, 302, 304	2SA678, 2SA735
TR501	2SA763, 2SA493
TR502	2SC1222, 2SC1345, 2SC1570
TR601, 602	2SA763, 2SA493
TR603, 607	2SD414
TR604	2SC1542
TR605	2SC711, 2SC536, 2SC1364
TR606	2SA641, 2SA678
TR608	2SB548
TR609, 610	2SC1030, 2SD371, 2SC1051
TR801	2SB524
TR901, 902	2SC900, 2SC1000, 2SC1222 2SC1345, 2SC1362
IC201	TA7060

SHERWOOD ELECTRONIC LABORATORIES, INC.

4300 NORTH CALIFORNIA AVENUE, CHICAGO, ILLINOIS 60618 312-478-7300

Litho in U.S.A. 12-74

www.hifiengine.com