MAIN AMP AND RESET CIRCUIT ALIGNMENT

NOTE
- Maintain line voltage at 120 volts. (UL, C.S.A.) (220/240 volts for European & Australian models).
- Set SELECTOR Switch to AUX.
- Set Mode Switch to Stereo.
- See P.C.B. illustrations for alignment points/adjustments.

MAIN AMPLIFIER ADJUSTMENT

STEP	ADJUSTMENT	EQUIPMENT	CONNECTION	AUDIO FREQ.	LEVEL	ADJUSTMENT
1	Check Balance by measuring DC voltage across OUTPUT TERMINAL of L and R channel.	DC Volt Meter	See Fig. 1.	No signal	DC voltage should be less than 30 mV.	Select value of R 409/410.
2	Idling current adjustment	DC Volt Meter	See Fig. 2.	No signal	Adjust voltage across Emittter resistors R 433 and R 434 to 10 mV. (8 Ω Load)	VR 401 VR 402

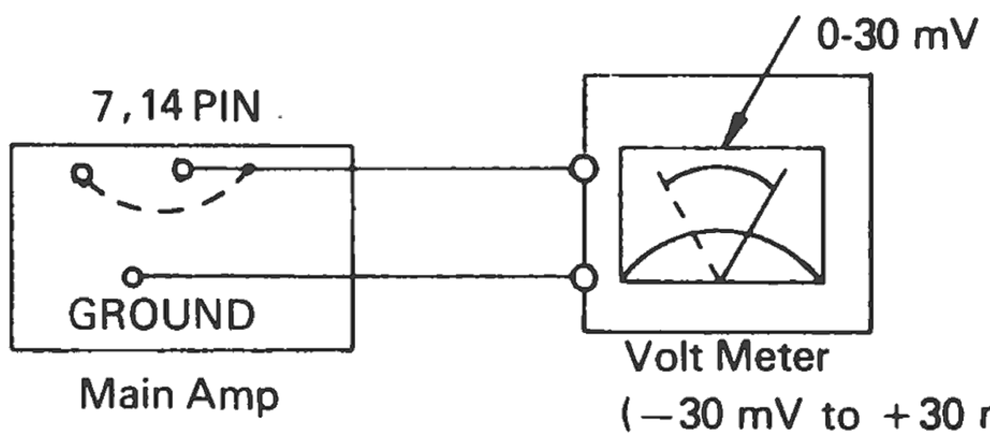

Figure 1

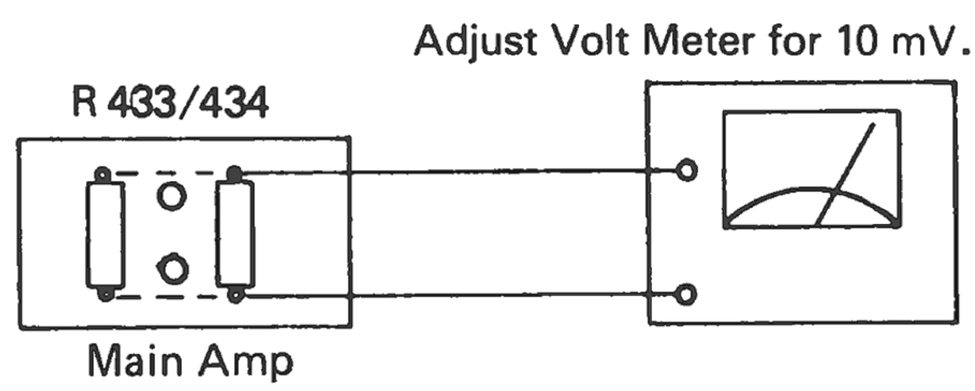

Figure 2

RESET CIRCUIT CHECK

STEP	ADJUSTMENT	EQUIPMENT	CONNECTION	AUDIO FREQ.	SETTING	LEVEL
1		Audio Osc. V.T.V.M. Oscilloscope	Fig. 3	1000 Hz	Volume: Max. BASS, TREBLE & BALANCE at center	Adjust input to AUX to get output level of about 3 Volts (8 ohm load).
2	Check if reset circuit is functioning.	Audio Osc. V.T.V.M. Oscilloscope	Fig. 4	1000 Hz	Same as above	No output signal after output is shorted.

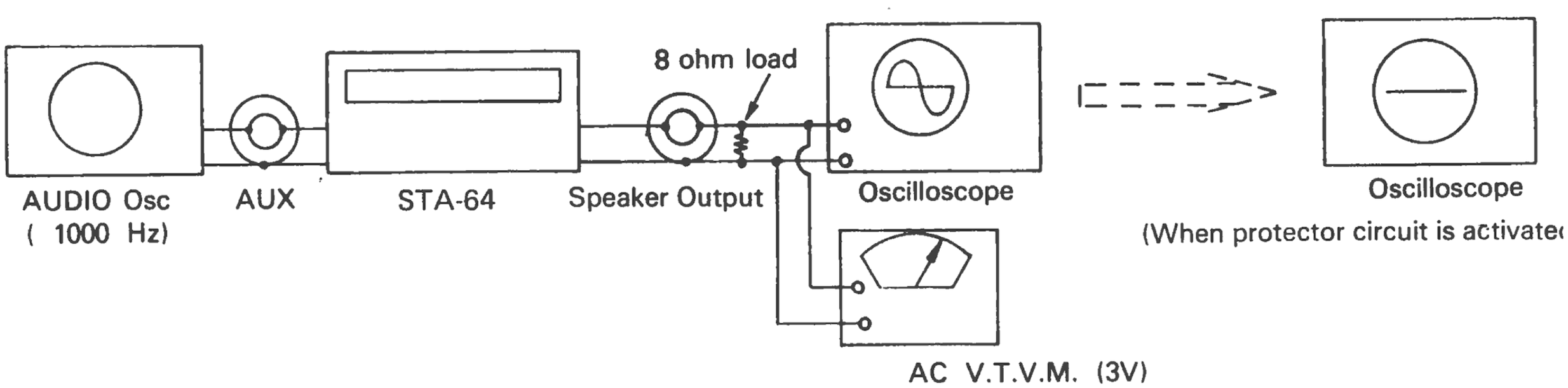

REPLACEMENT PARTS LIST

Ref. No.	Part No.	Description
17	SMQ1486	Metal, Pressure Roller Arm
18	SMQ1488	Spring, Pressure Roller Arm
19	SMQ1490	Head Housing
20	SMQ1492	Screw, Height Adjust
21	SMQ1494	Lug Bracket
22	WY823F	Head
23	SMQ1496	Head Base
24	SMQ1498	Spring, Head Support
25	SMQ342	Spring, Head Vertical Adjust
26	SMQ1500	Cord Clamp
27	MYF5BEX3-U7	Motor
28	SMQ1502	Belt
29	SMQ1504	Insulator
30	SMQ1628	Pulley, Motor
33	SMQ1634	REC Lever
34	SMQ1600	Collar, REC Lever
35	SMQ1636	Bracket
36	SMQ1638	Spring, REC Lever
37	SMQ1604	REC Push Arm A
38	SMQ1608	Collar, REC Push Arm
39	SMQ1516	Spring, REC Push Arm
40	SMQ1584-1	Switch Plate
41	SMQ1606	REC Push Arm B
42	SMQ1610	Gear
43	SMQ1612	Kick Plate Ass'y
44	SMQ1614	Stop Plate
45	SMQ1616	Collar, Stop Plate
46	SMQ1618	EJECT Solenoid Ass'y
47	SMQ1620	Spring, Kick Plate
48	SUS208	Spring Plate, REC Switch
49	SMQ1632	Repeat Defeat Switch (S10)
100	XSN3+6S	Screw, 3 mm × 6
101	XSN3+8S	Screw, 3 mm × 8
102	XSN3+10S	Screw, 3 mm × 10
103	XSN3+12S	Screw, 3 mm × 12
104	XYN3+C5S	Screw w/Washer, 3 mm × 5
105	XSN3D6S	Screw, 3 mm × 6
106	XSN26+8	Screw, 2.6 mm × 8
107	XSN26+10	Screw, 2.6 mm × 6
108	XWE3D8	Washer, 3 mm
109	XWE3E10	Washer, 3 mm
111	XWE26D75	Washer, 2.6 mm
112	XWA3B	Spring Washer, 3 mm
113	XNG3B	Nut, 3 mm
115	XUC15FT	Circlip, 1.5φ
116	XUC23FT	Circlip, 2.3φ
117	XWE45E10	Washer, 4.5φ
118	XSN2+8	Screw 2 mm × 8

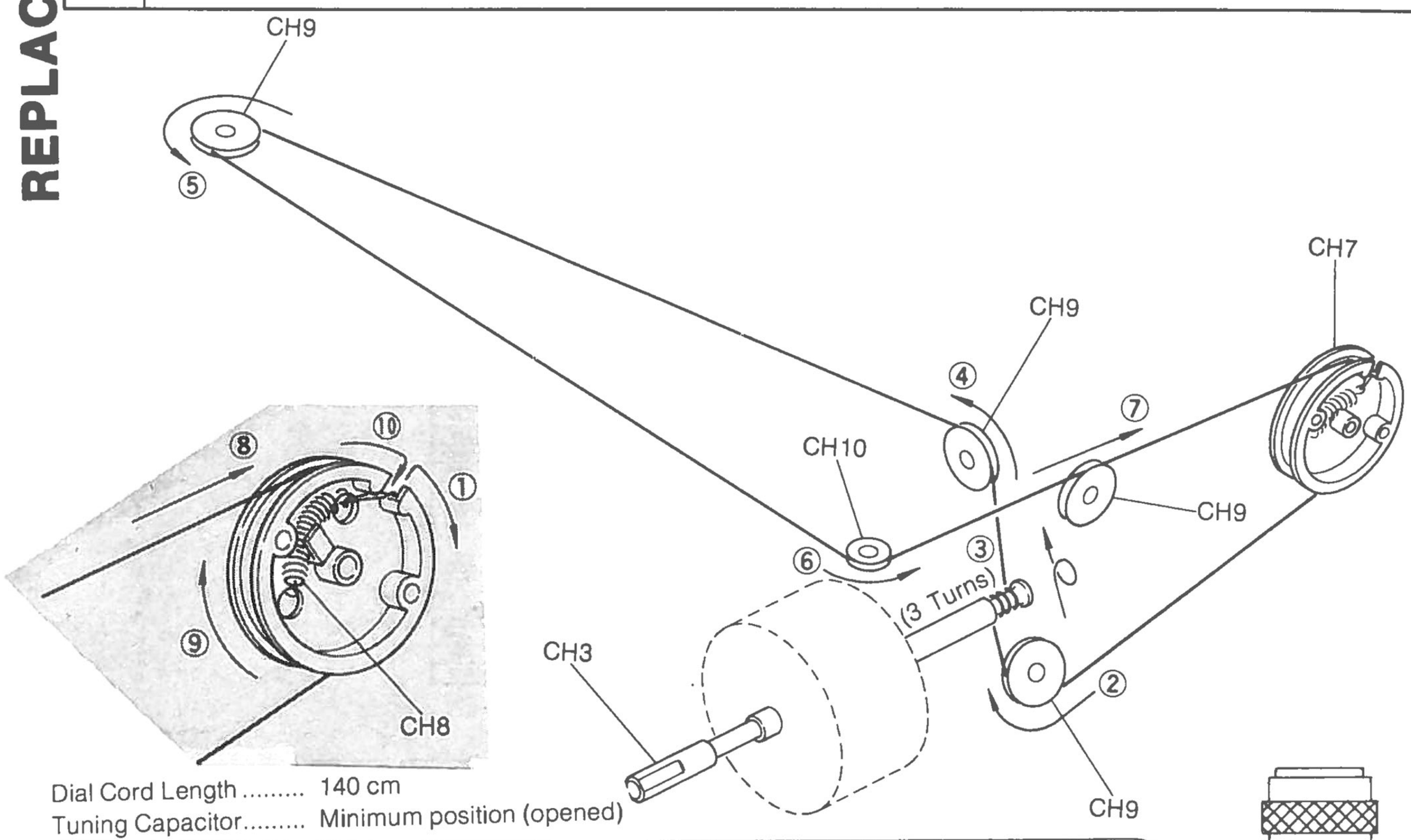

Dial Cord Length ..... 140 cm
Tuning Capacitor..... Minimum position (opened)

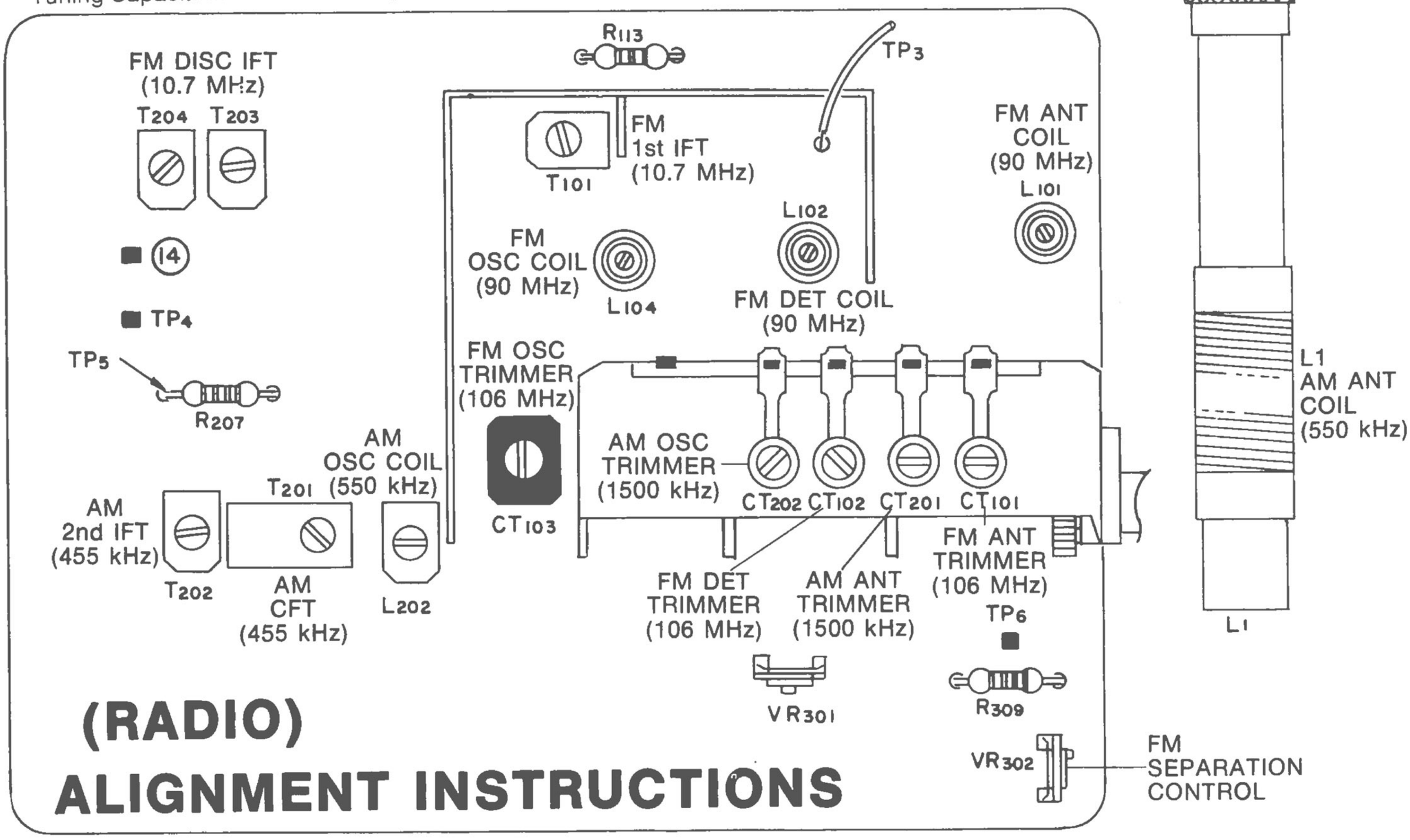

(RADIO) ALIGNMENT INSTRUCTIONS

EQUIPMENT REQUIRED

1. AM Signal Generator
2. AC Voltmeter
3. Oscilloscope

TUNER COIL & TRIMMER LOCATIONS

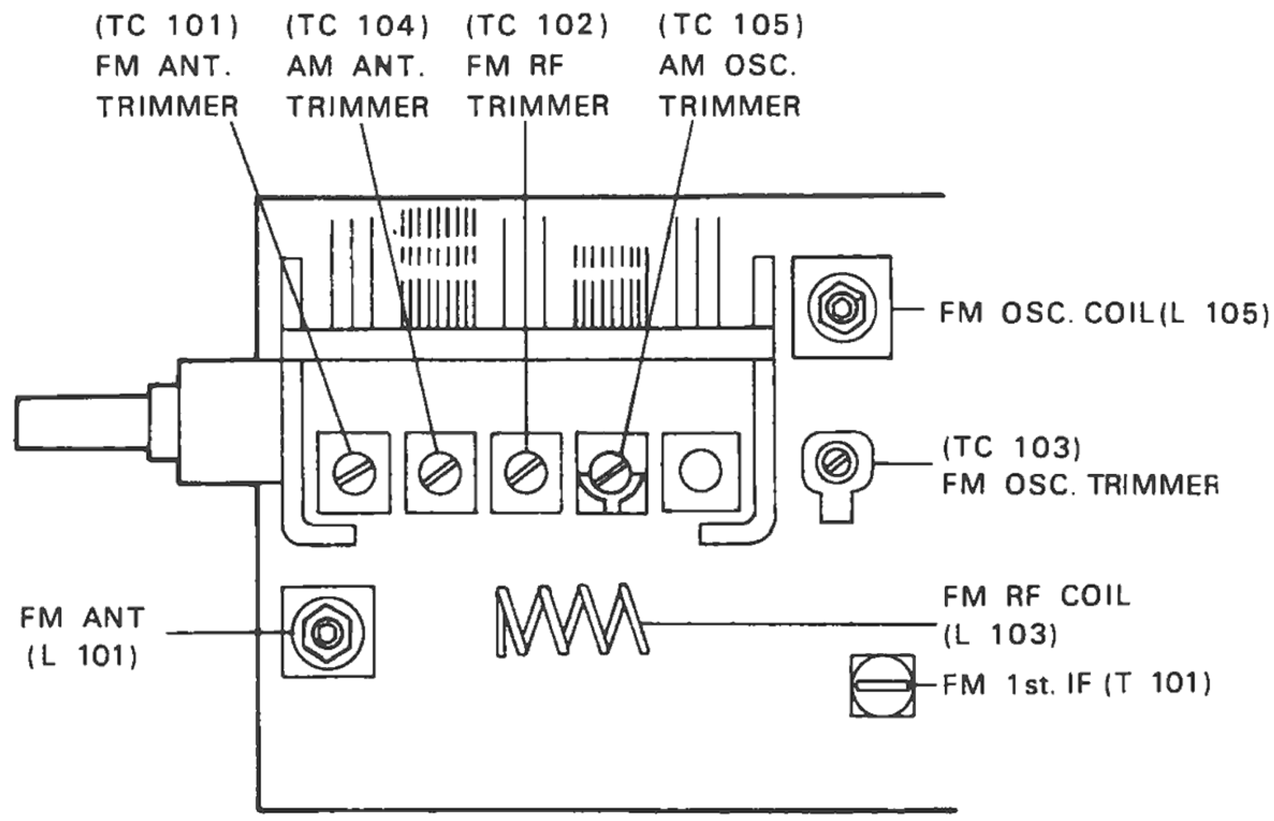

AM IF & RF ALIGNMENT

NOTE

- Signal generator output should be no higher than necessary to obtain an output reading.
- Maintain line voltage at 120 volts. (UL, C.S.A.) (Use 220/240V AC for European & Australian models.)
- Set SELECTOR Switch to AM.
- See P.C.B. illustrations for alignment points/adjustments.

STEP	SIGNAL GENERATOR COUPLING	SIGNAL GENERATOR FREQUENCY	DIAL SETTING	INDICATOR	ADJUSTMENT	REMARKS
1	Connect standard loop ANTENNA to Signal Generator and radiate signal into the AM Ferrite antenna. See Fig. 5.	455 kHz (400 Hz, 30% MOD)	Point of non-interference (near 600 kHz)	AC Voltmeter to TAPE OUT JACK	T 106 T 107 T 108 T 109	Adjust for maximum reading.
2	Same as above	600 kHz (400 Hz, 30% MOD)	600 kHz	Same as above	T 105 (OSC Coil) L 106 (AM ANT Coil)	Adjust for maximum reading.
3	Same as above	1400 kHz (400 Hz, 30% MOD)	1400 kHz	Same as above	TC 105 (OSC Trimmer) TC 104 (ANT Trimmer)	Adjust for maximum reading.
4	Repeat STEP 1 and then STEPs 2 and 3 until no further change is noticed.					
5	Same as step 1	1000 kHz (400 Hz, 30% MOD) Output level to 100 mV/m	Point of non-interference and no signal	AM Strength Meter	Select value of R 160.	Meter Pointer on Receiver should indicate between 80% and 90% on the Meter.

AM ALIGNMENT SET-UP

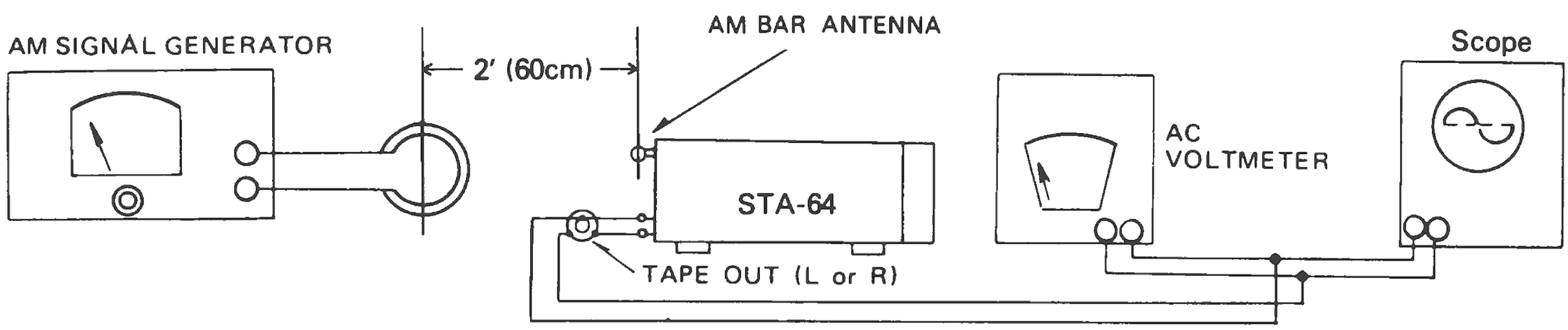

Figure 5

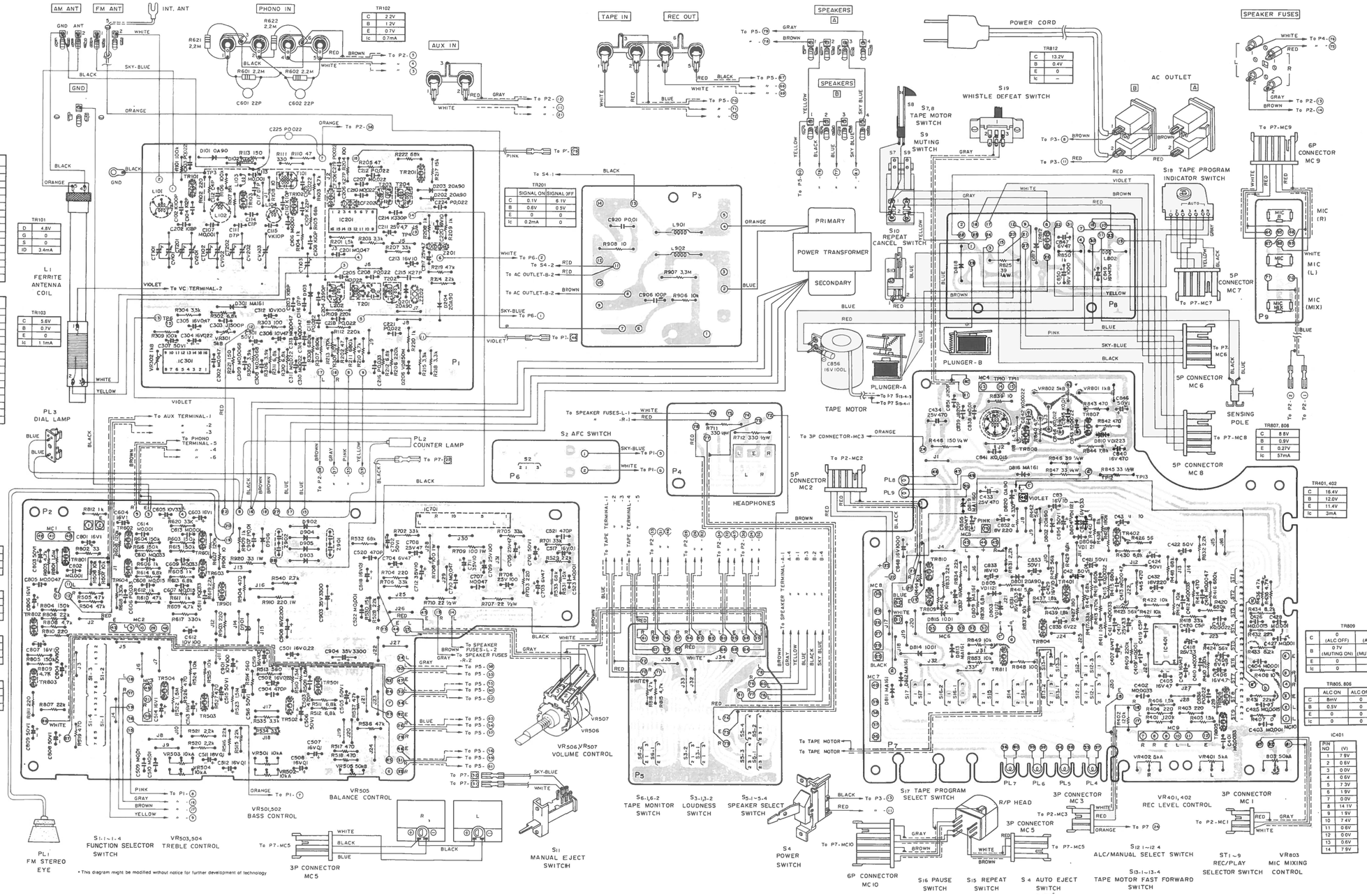

TR102	C 2.2V, B 1.2V, E 0.7V, Ic 0.7mA
TR812	C 13.2V, B 0.4V, E 0, Ic –
TR804	ALC ON: C 16V, B 1.1V, E 0.5V, Ic 0; ALC OFF: C 16.4V, B 0.1V, E 0, Ic 0
TR811	C 0, B 0.5V, E 13.1V, Ic –
TR201	SIGNAL ON: C 0.1V, B 0.6V, E 0, Ic 0.2mA; SIGNAL OFF: C 6.1V, B 0.5V, E 0, Ic 0
TR901	C 13.9V, B 9.3V, E 8.7V, Ic 34mA
TR503, 504	C 3.2V, B 0.6V, E 0.2V, Ic 0.5mA
TR101	D 4.8V, G 0, S 0, ID 3.4mA
TR103	C 5.6V, B 0.7V, E 0, Ic 1.1mA
TR501, 502	C 3.4V, B 1V, E 0.4V, Ic 0.7mA
TR807, 808	C 8.8V, B 0.9V, E 0.27V, Ic 57mA
TR401, 402	C 16.4V, B 12.0V, E 11.4V, Ic 3mA
TR601, 602	C 1.1V, B 0.5V, E 0.04V, Ic 0.02mA
TR603, 604	C 3.0V, B 1.1V, E 0.5V, Ic 0.5mA
TR801	C 2.5V, B 0.6V, E 0.03V, Ic 0.7mA
TR802, 803	C 3.3V, B 0.7V, E 0.1V, Ic 0.6mA
TR809	C 0 (ALC OFF) 0.7V (MUTING ON); B 8mV (ALC ON) 0.3V (MUTING OFF); E 0, Ic 0
TR805, 806	ALC ON: C 8mV, B 0.5V, E 0, Ic 0; ALC OFF: C 0, B 0, E 0, Ic 0

IC201 PIN NO	FM (V)	AM (V)
1	0.8V	0.8V
2	0.0V	0.0V
3	2.2V	2.2V
4	4.9V	4.9V
5	1.1V	1.1V
6	0.0V	0.0V
7	1.1V	1.1V
8	6.1V	6.1V
9	0.8V	6.8V
10	1.0V	1.5V
11	0.8V	0.8V
12	0.8V	6.8V
13	0.5V	0.7V
14	0.8V	1.7V
15	0.8V	6.8V
16	0.5V	0.7V

IC301 PIN NO.	FMST (V)	FM (V)
1	8.3V	8.4V
2	2.7V	2.7V
3	4.8V	4.8V
4	5.2V	5.3V
5	5.2V	5.2V
6	1.0V	13.9V
7	0.0V	0.0V
8	0.3V	0.2V
9	6.3V	6.3V
10	2.1V	2.1V
11	2.1V	2.1V
12	2.4V	2.4V
13	2.1V	2.1V
14	2.1V	2.1V
15	2.1V	2.1V
16	2.7V	2.7V

IC701 PIN NO	(V)
1	0.0V
2	0.0V
3	0.0V
4	20.6V
5	16.3V
6	22.9V
7	0.0V
8	21.5V
9	22.9V
10	0.0V
11	22.9V
12	14.2V
13	20.6V
14	0.0V
15	0.0V
16	0.0V

IC401 PIN NO	(V)
1	7.9V
2	0.6V
3	0.0V
4	0.6V
5	7.3V
6	1.9V
7	0.0V
8	14.1V
9	1.9V
10	7.4V
11	0.6V
12	0.0V
13	0.6V
14	7.9V

FM RF & IF ALIGNMENT

EQUIPMENT REQUIRED

1. FM Signal Generator ..... Output Level: 1 mV
2. Sweep Generator
3. AC Voltmeter
4. Oscilloscope
5. Distortion Meter

NOTE
- Signal Generator output should be no higher than necessary to obtain an output reading.
- Set SELECTOR Switch to FM.
- Maintain Line voltage at 120 volts. (UL, C.S.A.) (220/240 V AC for European & Australian models.)
- Refer to P.C.B. illustrations for test points/adjustments.

STEP	GENERATOR COUPLING	GENERATOR FREQUENCY	RADIO DIAL SETTING	INDICATOR	ADJUSTMENT	REMARKS
1	Sweep Generator to "FM ANT" terminal on FM Front end board	10.7 MHz (1400 kHz Sweep)	Any dial setting where no noise or interference exists	Scope to TP 7 at R 151 (MPX input) AM/FM/MPX Board	T 101, 102 103 T 104 (Primary) FM IFT	Adjust for maximum amplitude and proper linearity between ± 150 kHz markers. Refer to Fig. 6.
2	Sweep Generator to FM Antenna Terminal thru FM Dummy antenna (300 ohm)	"	"	"	T101, 102 FM IFT	"
3	Same as above	"	"	"	T 104 FM IFT. (Primary and Secondary)	Adjust for symmetrical "S" curve as shown in Fig. 6.
4	Signal Generator to FM Antenna Terminal thru FM Dummy antenna (300 ohm)	98 MHz (400 Hz, 100% MOD)	Tune for Maximum reading on meter.	Distortion Meter to TAPE OUT Jack	T 104 FM Discrim. (Secondary)	Adjust for minimum distortion.
5	Same as above	*86.5 MHz See Note in step 7.	Tuning gang fully closed	AC Voltmeter and Scope to TAPE OUT Jack	L 105 (FM OSC)	Adjust for maximum reading on meter.
6	Same as above	108.5 MHz	Tuning gang fully opened	"	TC 103 (FM OSC Trimmer)	"
7	Repeat STEPs (5) and (6) until Tuning Range Covers exactly from 86.5 MHz to 108.5 MHz. (*European models must not be able to tune below 87.5 MHz.)					
8	Signal Generator to FM Dummy antenna (300 ohm)	90 MHz	90 MHz Tune to Signal	AC Voltmeter and Scope to TAPE OUT Jack	L 101 (FM ANT Coil) L 103 (FM RF Coil; stretch or squeeze)	Adjust for maximum reading on AC Voltmeter.
9	Same as above	106 MHz	106 MHz Tune to Signal	"	TC 101 (FM ANT Trimmer) TC 102 (FM RF Trimmer)	"
10	Repeat STEPs (8) and (9) until no further improvement is noticed.					
11	Same as STEP (8) ANT. input: 1 mV	98 MHz	98 MHz Tune to Signal	———	T110	Adjust for maximum reading on the Receiver's meter.
12	Same as STEP (8) ANT. input: 100 mV	"	"	———	VR101	Adjust so the Meter Pointer on Receiver is full scale.

FM ALIGNMENT SET-UP

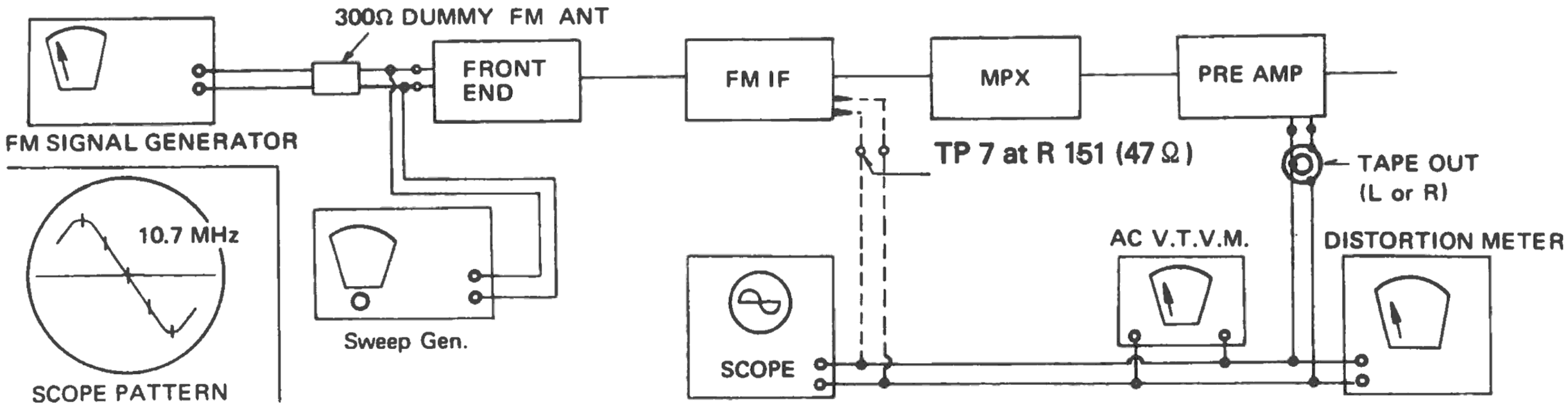

Figure 6 **Figure 7**

FM STEREO ALIGNMENT

Equipment Required

1. Stereo Modulator ..... Connect Stereo Modulator to EXT. Mod. terminal FM signal generator.
   Modulation Level of 19 kHz Pilot Signal ....8 — 10 %
2. FM Signal Generator .. Output Level ... 1 mV
   Frequency ..... Approximately 98 MHz
   Deviation ..... 75 kHz 100 % modulation of composite signal
3. Audio Generator
4. AC Voltmeter
5. Oscilloscope
6. Distortion Meter
7. Frequency Counter

Note: See P.C.B. illustration for alignment/test points.

Preliminaries

Set SELECTOR switch to FM STEREO.

MULTIPLEX & SEPARATION ALIGNMENT

STEP	SIGNAL GENERATOR COUPLING	STEREO MODULATION	INDICATOR	ADJUSTMENT	REMARKS
1	Connect to FM Antenna terminal thru FM dummy antenna(300 Ω).	Mono. 1 kHz (1000 Hz, No Mod) Input 1 mV	Counter connected to TP 14 at Pin 12 of IC	VR 103	Adjust for 19 kHz ±50 Hz on Counter. Refer to Fig. 8.
2	Same as above	Composite MPX Signal 1 kHz on Left channel ONLY	AC Voltmeter connected for TAPE OUT jack of Right channel	VR 102 (Separation)	Adjust for minimum reading. Refer to Fig. 9.
3	Same as above	Composite MPX Signal 1 kHz on Right channel ONLY	AC Voltmeter connected for TAPE OUT jack of Left channel	Same as above	Same as above
4	Repeat STEPs 2 and 3 until AC Voltmeter reading is at least —33 dB re same channel output (i.e. 33 dB separation).				
5	Same as step 1	Composite Signal 1 kHz	AC Voltmeter connected to TAPE OUT jack		With 10 μV antenna input signal, stereo indicator lamp should come on.

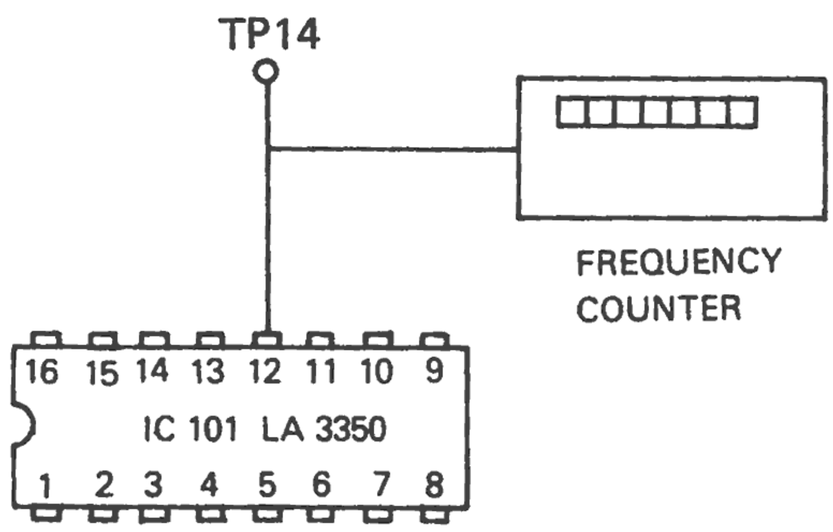

Figure 8

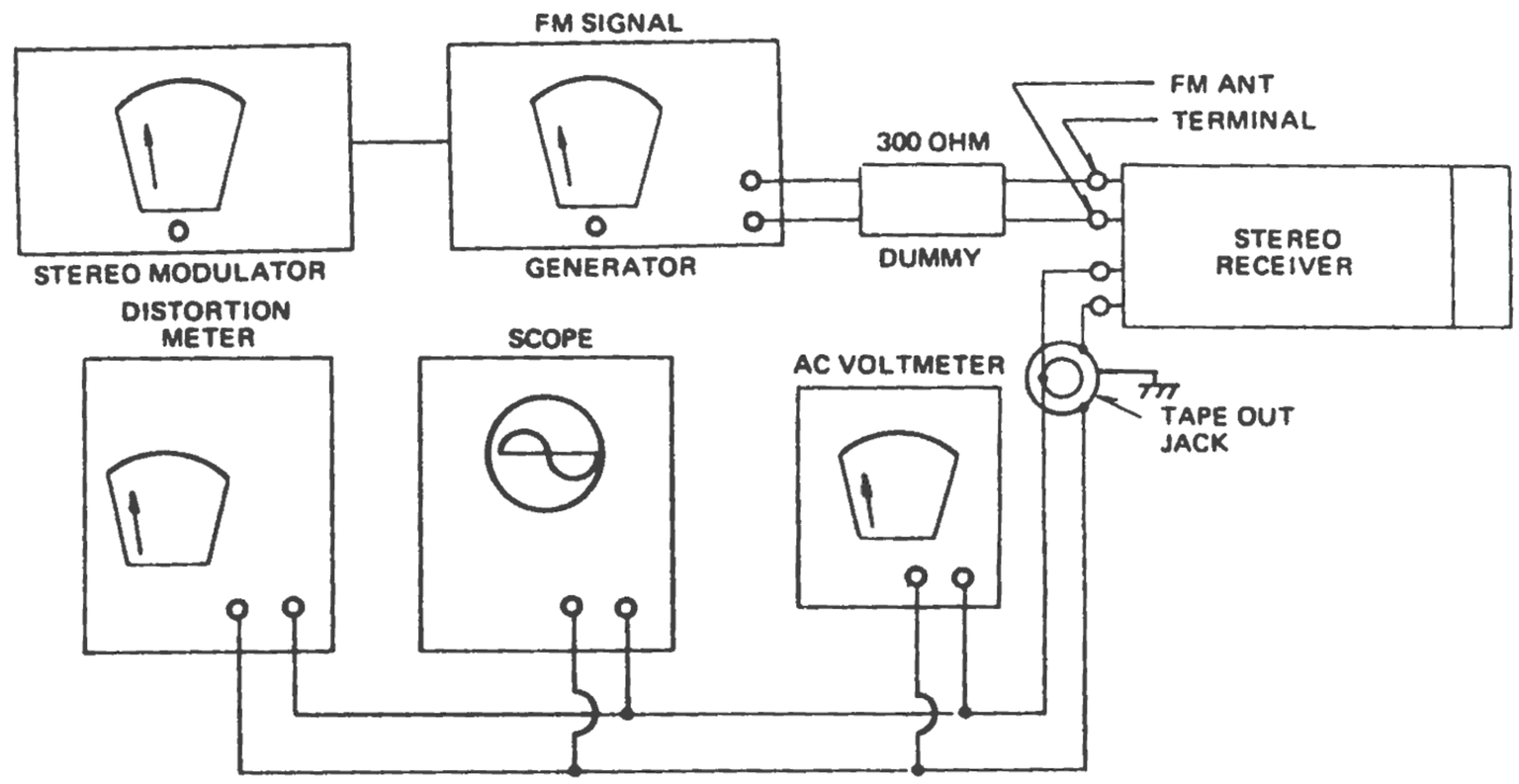

Figure 9

BRIEF DESCRIPTION OF PROTECTIVE CIRCUIT

If speaker terminals are shorted (or Load impedance of one channel [Left or Right] is less than 4 ohms), excessively high current flows from Emitter to Collector of TR 412 (or TR 414) and a high voltage appears across R 435 (or R 436). This high voltage goes to Gate of SCR after being rectified by D 510 (or D 511). When the voltage between Cathode and Gate increases to about 0.7 V, SCR will be turned on. Voltage at Pin No. 12 on Power Supply Board goes to −1 V to 0 V and TONE circuits will stop functioning and thus protect MAIN Amp.

If this should occur, the Amplifier will automatically shut down and output will drop to zero. Turn the Receiver off to reset the protective circuit. When the problem is corrected, turn the Receiver on again.

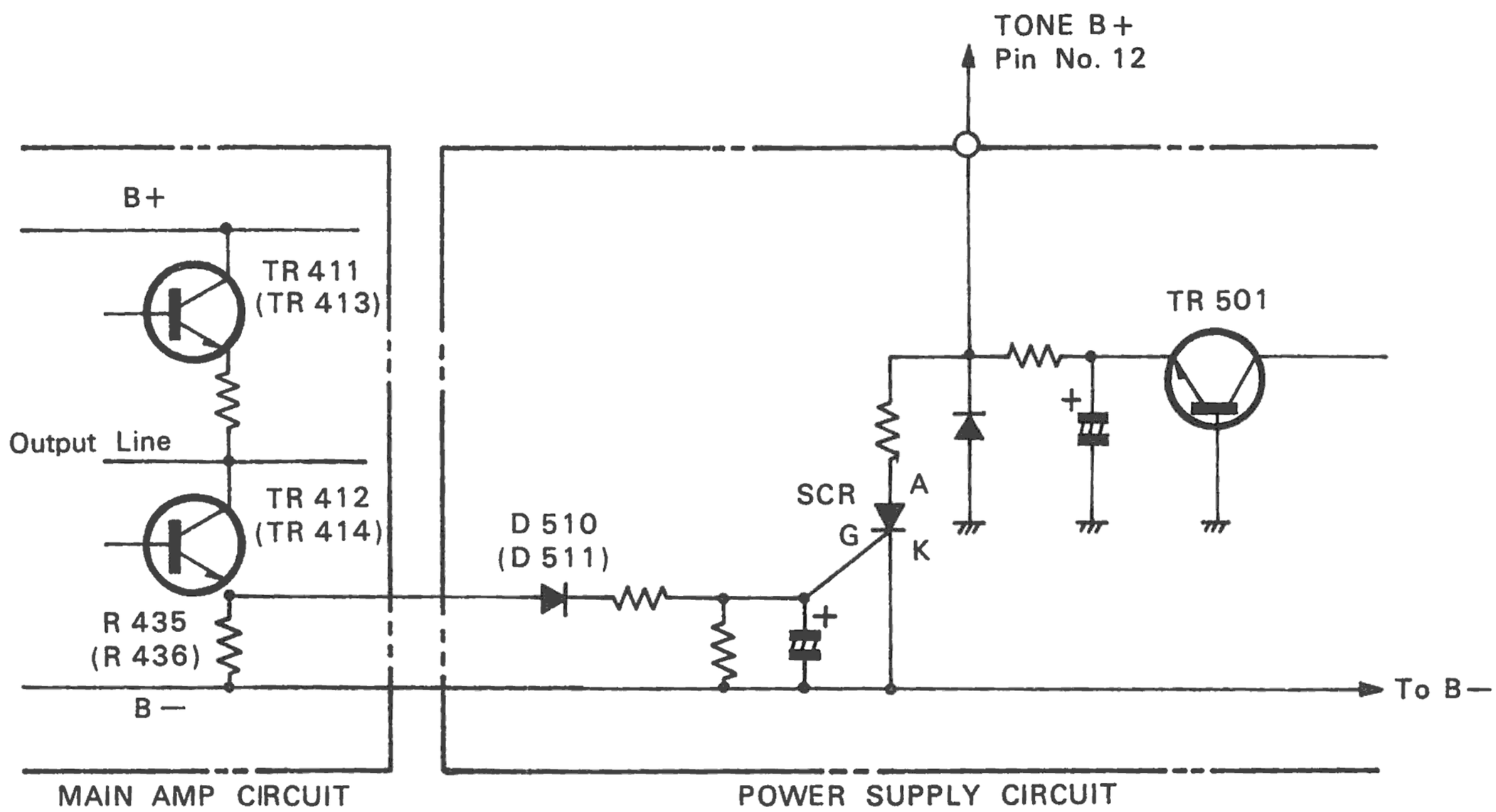

3. BLOCK DIAGRAM

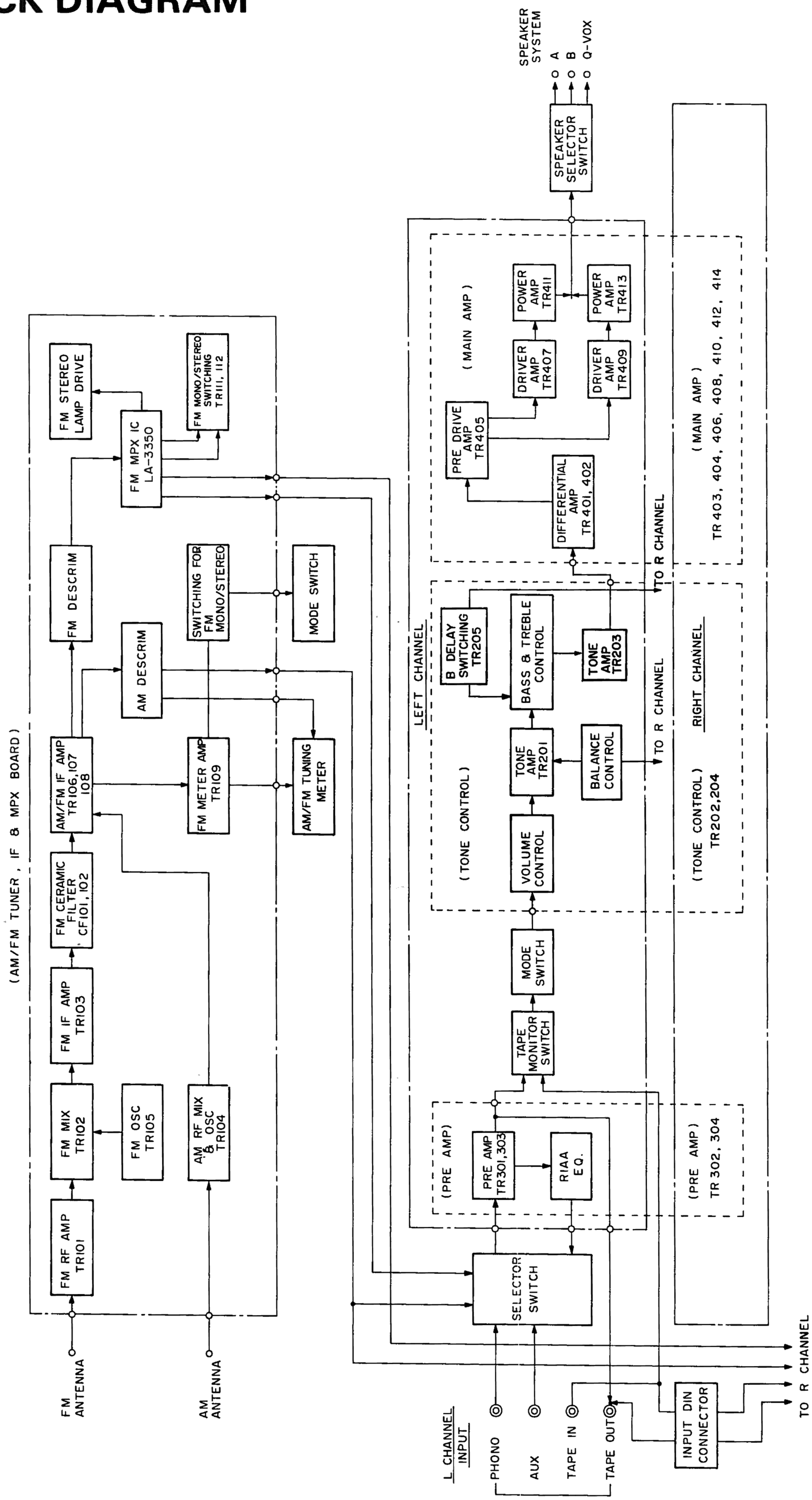

AM/FM TUNER, IF & MPX P.C.B.

Realistic STA-64 (31-2073)

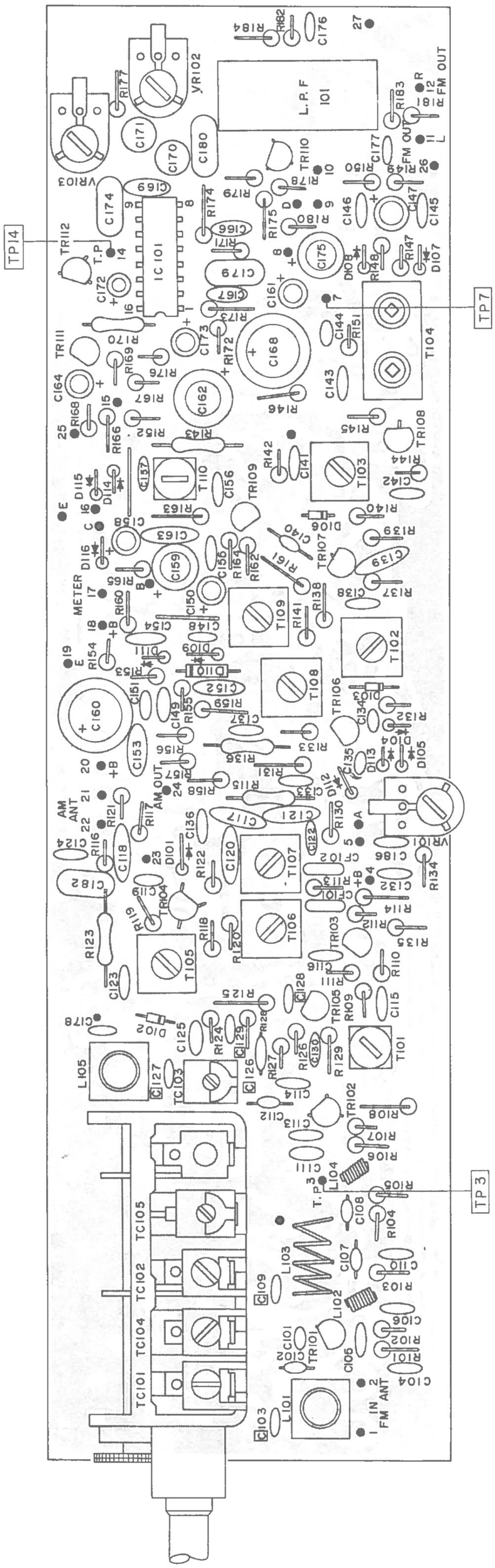

PRE AMP P.C.B.

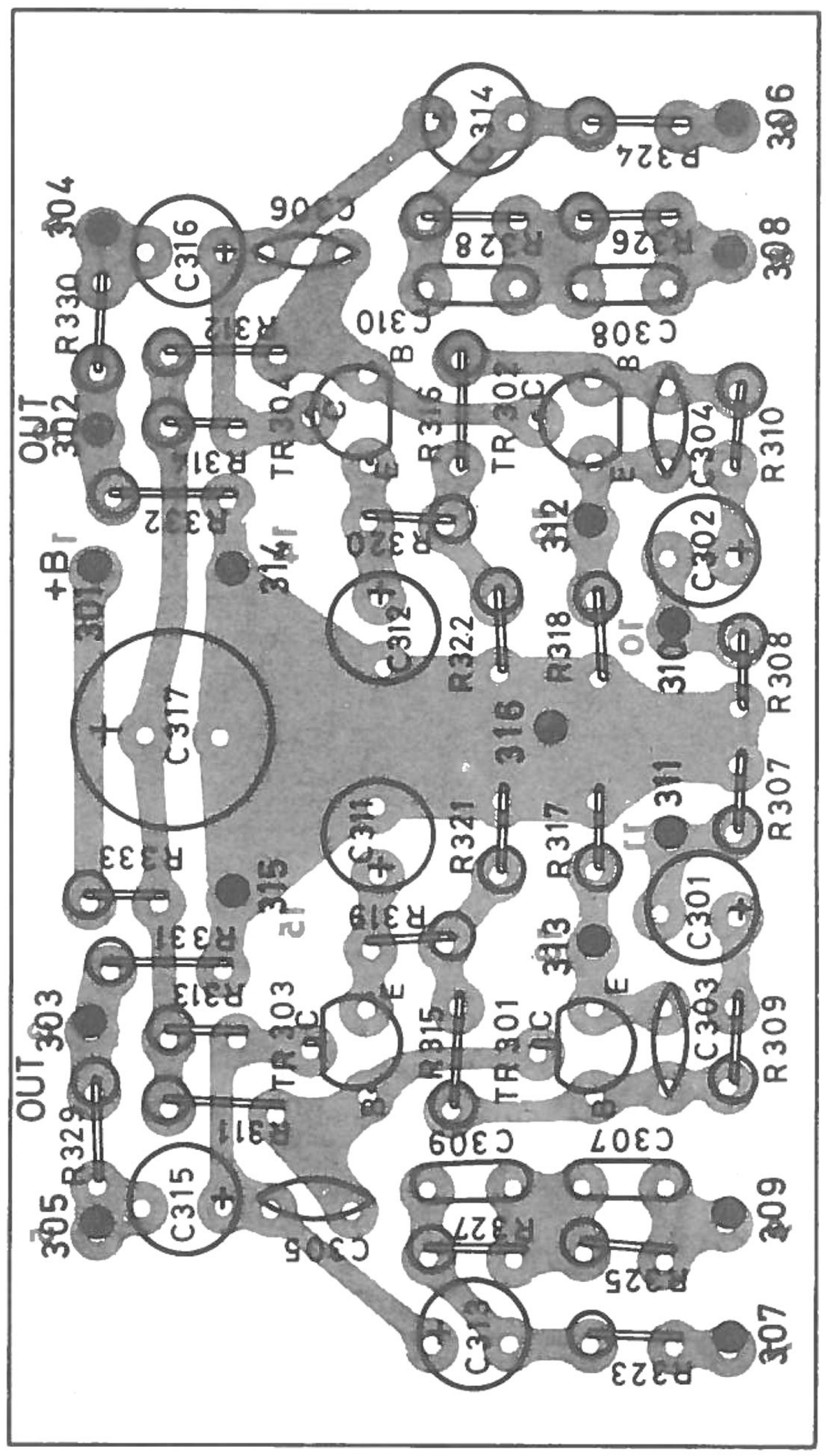

TONE CONTROL P.C.B.

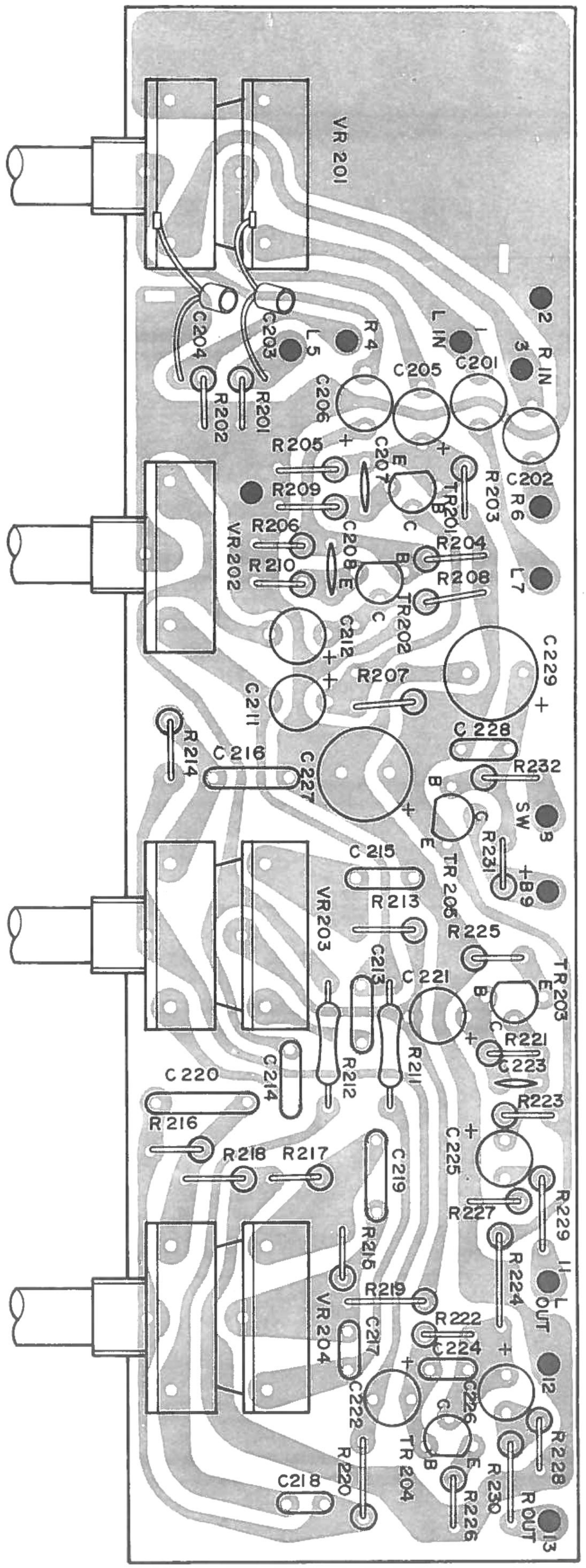

MAIN AMP P.C.B.

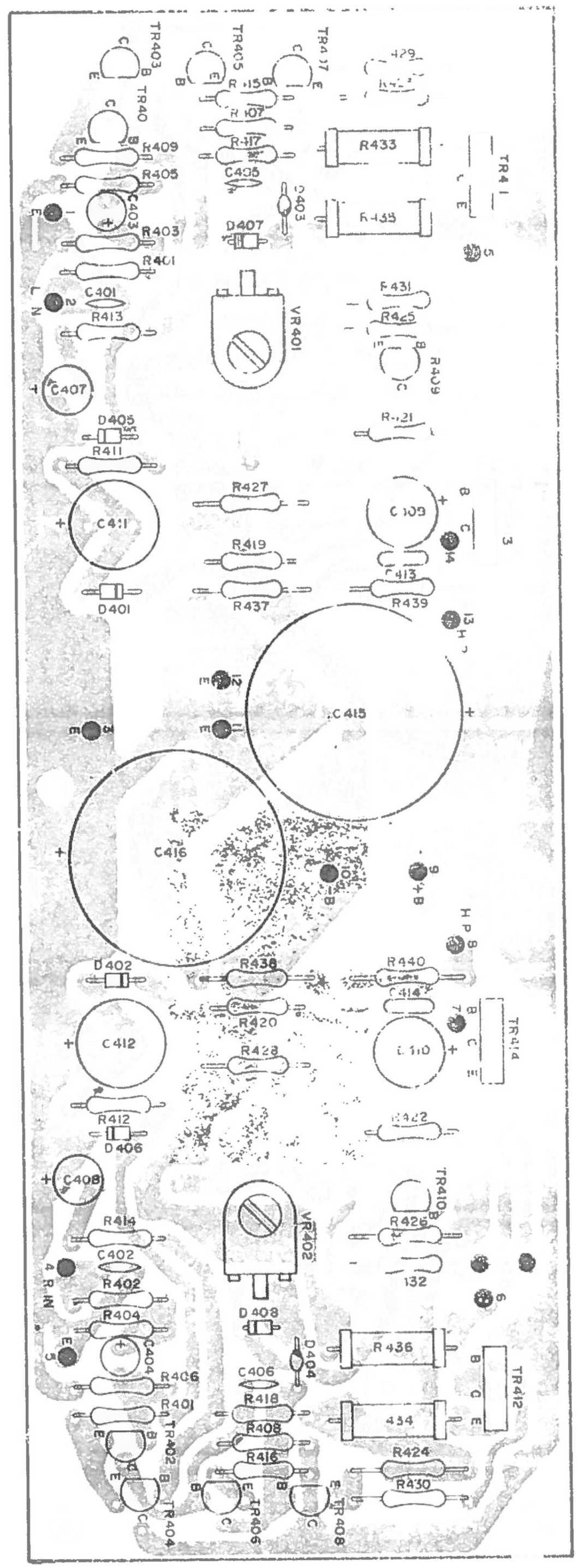

18. SCHEMATIC DIAGRAM

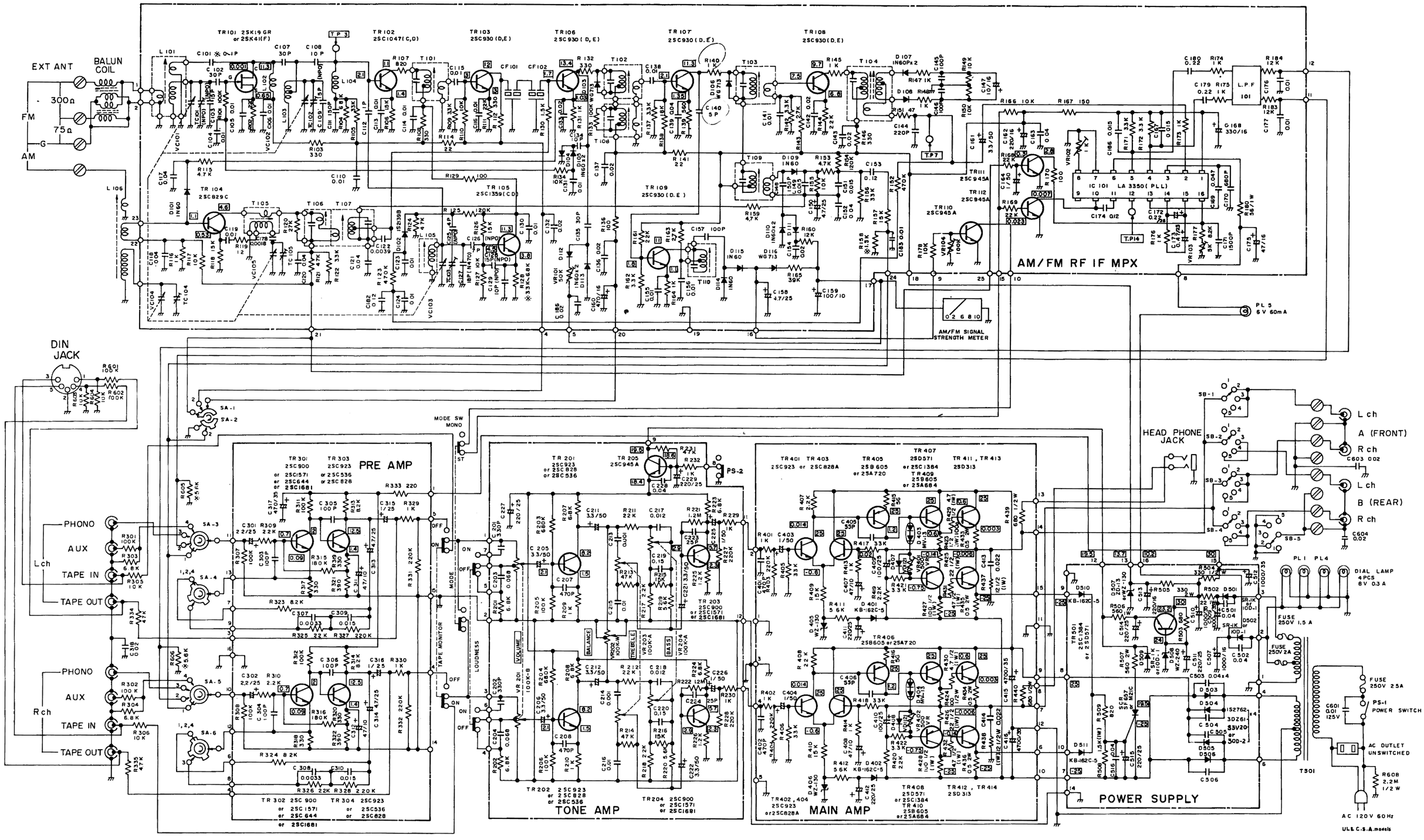

POWER SUPPLY CIRCUIT FOR AUSTRALIAN MODELS.

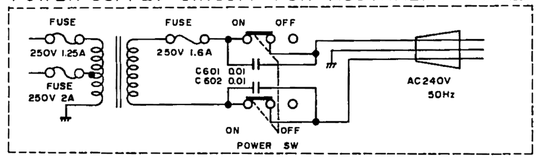

POWER SUPPLY CIRCUIT FOR EUROPEAN MODELS

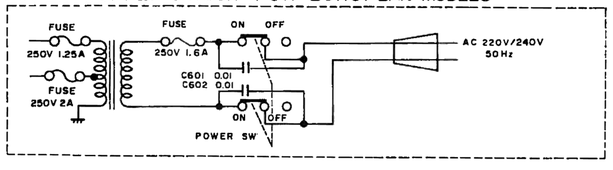

[NOTE]

(1) SA-1~SA-7 FUNCTION SWITCH 1-AM, 2-FM, 3-PHONO, 4-AUX

(2) SB-1~SB-5 SPEAKER SELECTOR SWITCH 1-OUT, 2-A, 3-QUATRAVOX 4-B, 5-A+B

(3) ALL RESISTANCE VALES ARE INDICATED IN "OHM" ($K=10^3$ OHM, $M=10^6$ OHM).

(4) ALL CAPACITANCE VALUES ARE INDICATED IN "MF" ($P=10^{-6}$ MF).

(5) ※ VALUE MAY VARY FROM UNIT TO UNIT FOR OPTIMUM PERFORMANCE.

(6) ( ) VALUES IS USED FOR C.S.A. MODELS ONLY.

(7) PS-1~PS-2 POWER SWITCH

POWER SUPPLY P.C.B.

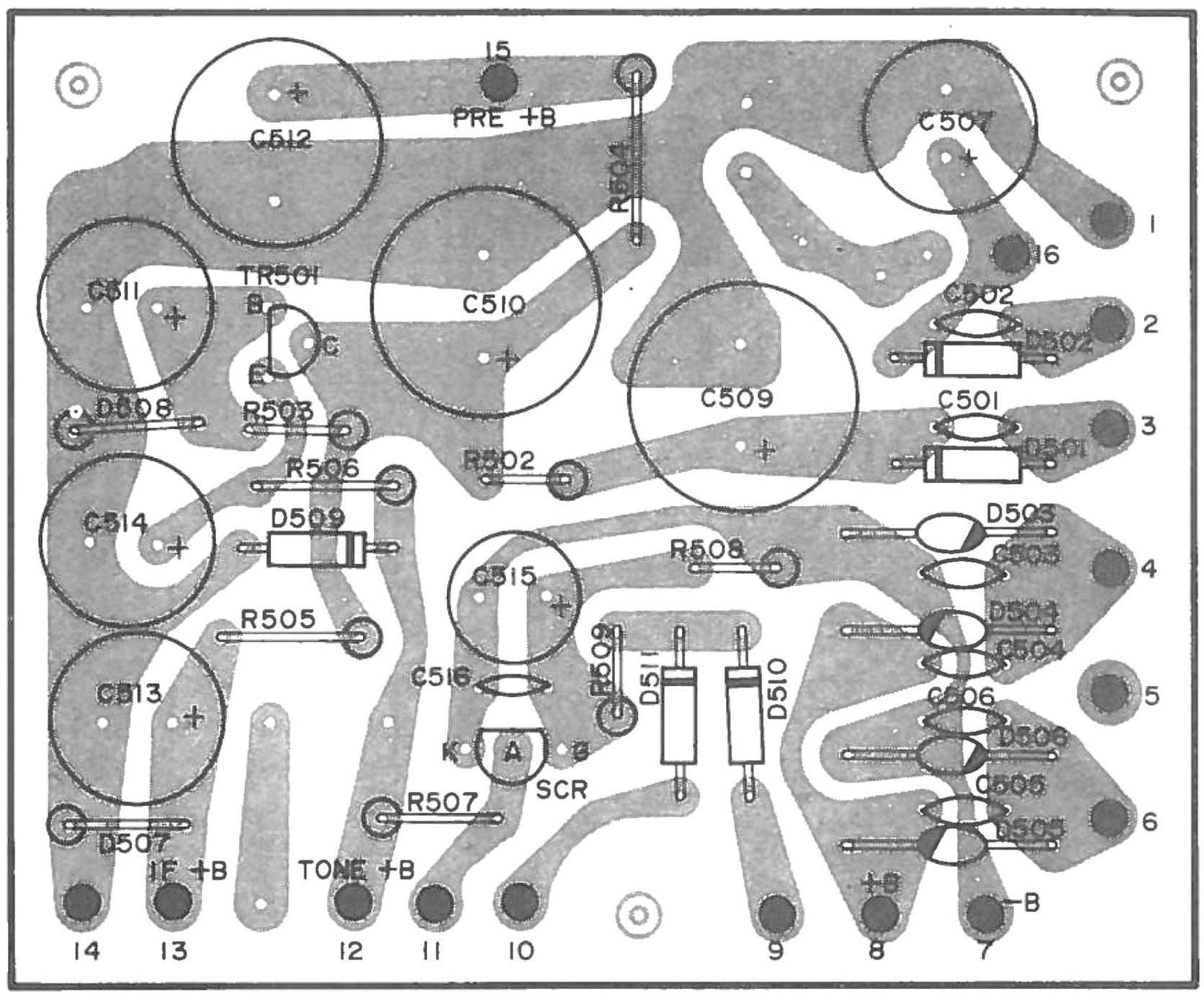

JACK P.C.B.

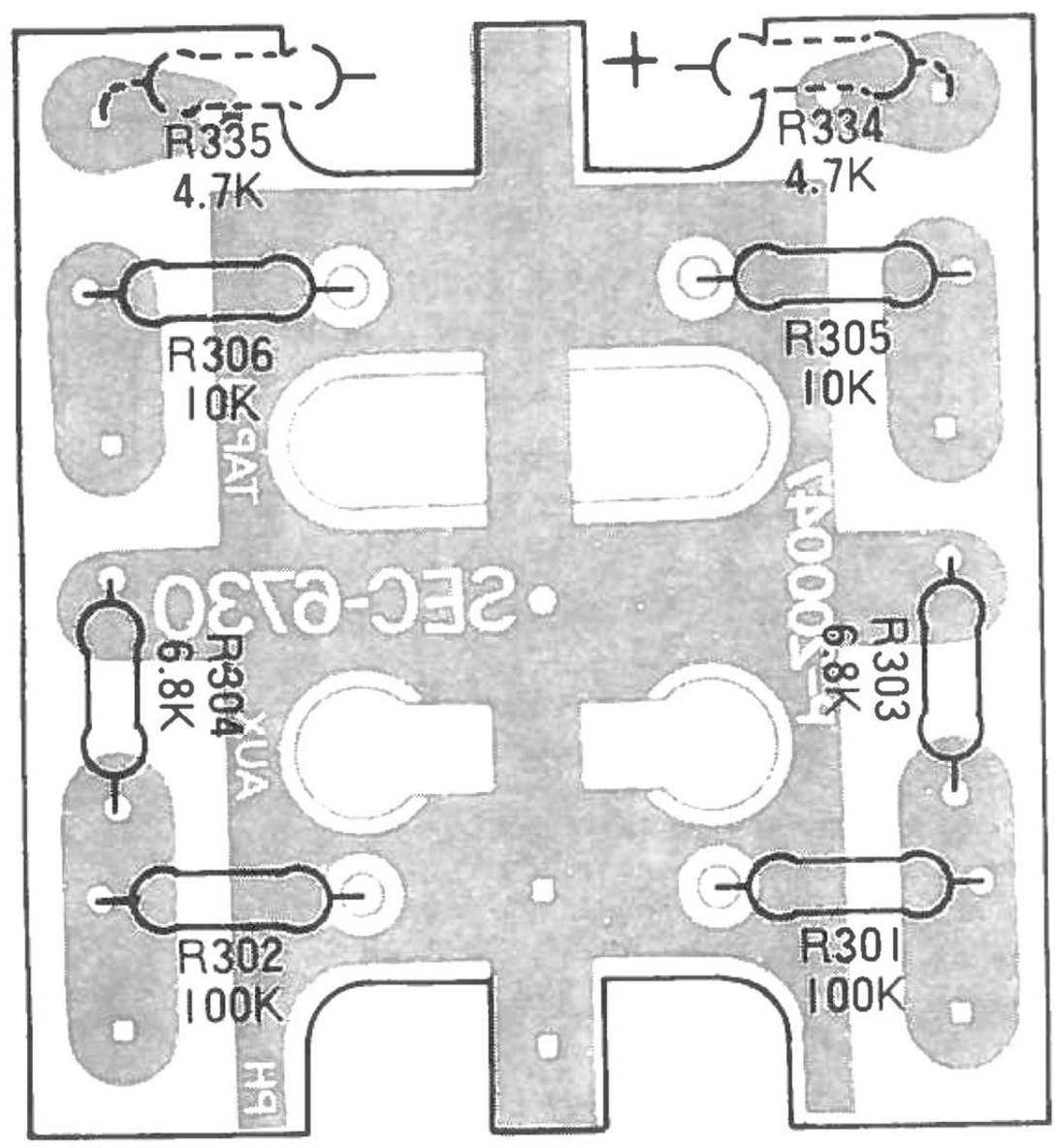

REF. NO.	DESCRIPTION	RS PART NO.	MFD. PART NO.
CAPACITORS			
C 101	Ceramic 1 pF 25 WV		
C 102	Ceramic 30 pF 25 WV		
C 103	Ceramic 15 pF 25 WV (NP0)		
C 104	Ceramic 0.01 μF 25 WV		
C 105	Ceramic 0.01 μF 25 WV		
C 106	Ceramic 0.01 μF 25 WV		
C 107	Ceramic 30 pF 25 WV		
C 108	Ceramic 10 pF 25 WV		
C 109	Ceramic 15 pF 25 WV (NP0)		
C 110	Ceramic 0.01 μF 25 WV		
C 111	Ceramic 150 pF 25 WV		
C 112	Ceramic 1 pF 25 WV (NP0)		
C 113	Ceramic 0.01 μF 25 WV		
C 114	Ceramic 0.01 μF 25 WV		
C 115	Ceramic 0.01 μF 25 WV		
C 116	Ceramic 0.01 μF 25 WV		
C 117	Ceramic 0.04 μF 25 WV		
C 118	Ceramic 0.04 μF 25 WV		
C 119	Mylar 0.01 μF 50 WV		
C 120	Ceramic 0.04 μF 25 WV		
C 121	Ceramic 0.04 μF 25 WV		
C 122	Mylar 0.0039 μF 50 WV		
C 123	Ceramic 0.01 μF 25 WV		
C 124	Ceramic 0.01 μF 25 WV		
C 125	Ceramic 4 pF 25 WV (NP0)		
C 126	Ceramic 7 pF 25 WV (NP0)		
C 127	Ceramic 18 pF 25 WV (N470)		
C 128	Ceramic 15 pF 25 WV (NP0)		
C 129	Ceramic 10 pF 25 WV (NP0)		
C 130	Ceramic 0.01 μF 25 WV		
C 131	Ceramic 0.01 μF 25 WV		
C 132	Ceramic 0.02 μF 25 WV		
C 133	Ceramic 0.02 μF 25 WV		
C 134	Ceramic 10 pF 25 WV		
C 135	Ceramic 30 pF 25 WV		
C 136	Ceramic 0.02 μF 25 WV		
C 137	Ceramic 0.02 μF 25 WV		
C 138	Ceramic 0.01 μF 25 WV		
C 139	Ceramic 0.04 μF 25 WV		
C 140	Ceramic 5 pF 25 WV		
C 141	Ceramic 0.01 μF 25 WV		
C 142	Ceramic 0.02 μF 25 WV		
C 143	Ceramic 0.02 μF 25 WV		
C 144	Ceramic 220 pF 25 WV		
C 145	Ceramic 100 pF 25 WV		
C 146	Ceramic 100 pF 25 WV		

REF. NO.	DESCRIPTION	RS PART NO.	MFD. PART NO.
C 147	Electrolytic 10 μF / 16 V		
C 148	Ceramic 150 pF 25 WV		
C 149	Mylar 0.015 μF 50 WV		
C 150	Electrolytic 4.7 μF / 25 WV		
C 151	Mylar 0.015 μF 50 WV		
C 152	Ceramic 0.04 μF 25 WV		
C 153	Mylar 0.12 μF 50 WV		
C 154	Ceramic 0.02 μF 25 WV		
C 155	Ceramic 0.01 μF 25 WV		
C 156	Ceramic 0.01 μF 25 WV		
C 157	Ceramic 100 pF 25 WV		
C 158	Electrolytic 4.7 μF / 25 WV		
C 159	Electrolytic 100 μF / 10 V		
C 160	Electrolytic 470 μF / 16 V		
C 161	Electrolytic 3.3 μF / 50 V		
C 162	Electrolytic 220 μF / 16 V		
C 163	Ceramic 0.04 μF 25 WV		
C 164	Electrolytic 1 μF / 50 V		
C 165	Not used		
C 166	Mylar 0.015 μF 50 WV		
C 167	Mylar 0.015 μF 50 WV		
C 168	Electrolytic 330 μF / 16 V		
C 169	Mylar 0.047 μF 50 WV		
C 170	Polystyrene 680 pF 50 WV		
C 171	Polystyrene 1500 pF 50 WV		
C 172	Aluminium 0.22 μF / 25 V		
C 173	Aluminium 0.47 μF / 25 V		
C 174	Mylar 0.12 μF 50 WV		
C 175	Electrolytic 47 μF / 16 V		
C 176	Mylar 0.01 μF 50 WV		
	(0.0056 μF for European and Australian models)		
C 177	Mylar 0.01 μF 50 WV		
	(0.0056 μF for European and Australian models)		
C 178	Mylar 0.0018 μF 50 WV		
C 179	Aluminium 0.22 μF / 25 V		
C 180	Aluminium 0.22 μF / 25 V		
C 182	Mylar 0.12 μF 50 WV		
C 183	Mylar 0.01 μF 50 WV		
C 186	Ceramic 0.02 μF 25 WV		
C 201/202	Polystyrene 330 pF 50 WV		
C 203/204	Mylar 0.068 μF 50 WV		
C 205/206	Electrolytic 3.3 μF / 50 V		
C 207/208	Ceramic 470 pF 25 WV		
C 209/210	Not used		
C 211/212	Electrolytic 3.3 μF / 50 V		
C 213/214	Mylar 0.001 μF 50 WV		
C 215/216	Mylar 0.01 μF 50 WV		

www.hifiengine.com

REF. NO.	DESCRIPTION	RS PART NO.	MFD. PART NO.
C 217/218	Mylar 0.012 μF 50 WV		
C 219/220	Mylar 0.15 μF 50 WV		
C 221/222	Electrolytic 3.3 μF / 50 V		
C 223/224	Ceramic 25 pF 50 WV		
C 225/226	Electrolytic 1 μF / 50 V		
C 227	Electrolytic 220 μF / 25 V		
C 228	Ceramic 0.04 μF 50 WV		
C 229	Electrolytic 220 μF / 25 V		
C 301/302	Tantalum 2.2 μF / 25 V		
C 303/304	Ceramic 100 pF 50 WV		
C 305/306	Ceramic 100 pF 50 WV		
C 307/308	Mylar 0.0033 μF 50 WV		
C 309/310	Mylar 0.015 μF 50 WV		
C 311/312	Electrolytic 47 μF / 10 V		
C 313/314	Electrolytic 4.7 μF / 25 V		
C 315/316	Tantalum 1 μF / 25 V		
C 317	Electrolytic 470 μF / 35 V		
C 318	Ceramic 0.02 μF 50 WV		
C 401/402	Ceramic 470 pF 50 WV		
C 403/404	Electrolytic 1 μF / 50 V		
C 405/406	Ceramic 55 pF 50 WV		
C 407/408	Electrolytic 47 μF / 10 V		
C 409/410	Electrolytic 100 μF / 25 V		
C 411/412	Electrolytic 220 μF / 25 V		
C 413/414	Mylar 0.022 μF 50 WV		
C 415/416	Electrolytic 4700 μF / 35 V		
C 501/502	Ceramic 0.04 μF 50 WV		
C 503/504	Ceramic 0.04 μF 50 WV		
C 505/506	Ceramic 0.04 μF 50 WV		
C 507	Electrolytic 1000 μF / 16 V		
C 508	Not used		
C 509/510	Electrolytic 1000 μF / 35 V		
C 511	Electrolytic 220 μF / 25 V		
C 512	Electrolytic 1000 μF / 35 V		
C 513	Electrolytic 220 μF / 16 V		
C 514	Electrolytic 220 μF / 25 V		
C 515	Electrolytic 220 μF / 25 V		
C 516	Ceramic 0.04 μF 50 WV		
C 601	*Ceramic 0.01 μF 125 V MR or UK-535 type (Use for UL models only)		
	**Ceramic 0.01 μF 125 V CP-3 Type (Use for C.S.A. models only)		
C 601/602	***Ceramic 0.01 μF 250 V VDE approved type (Use for European & Australian models)		P-220015

REF. NO.	DESCRIPTION	RS PART NO.	MFD. PART NO.
C 603/604	Ceramic 0.02 μF 50 WV		
CERAMIC FILTERS			
CF 101/102	Ceramic Filter SFE-10.7 MA-8	CA-7536	P-140030
COILS & TRANSFORMERS			
L 101	FM ANT Coil	CA-3593	P-110036
L 102	FM Trap Coil	CB-2171	P-360003
L 103	FM RF Coil	CA-4736	P-340015
L 104	FM Trap Coil		P-360003
L 105	FM OSC Coil		
	*Use for UL & C.S.A. models	CA-4528	P-120029
	**Use for European & Australian models		P-120033
	AM Bar Antenna Coil	CA-3464	P-110064
LPF 101	Low Pass Filter (19 kHz)	CA-3373	P-510006
T 101	FM IFT (7F-007)	CA-7265	P-140007
T 102	FM IFT (10F-011)	CA-7254	P-140011
T 103	FM IFT (10F-011)	CA-7254	P-140011
T 104	FM Discriminator (10F-014)	CA-7286	P-140014
T 105	AM OSC Coil (OC-008)	CA-4438	P-120008
T 106	AM IFT (OA-011)	CA-7281	P-130011
T 107	AM IFT (OA-010)	CA-7428	P-130010
T 108	AM IFT (OA-005)	CA-7112	P-130005
T 109	AM IFT (OA-012)	CA-7313	P-130012
T 110	FM IFT (7F-008)	CA-7266	P-140008
	Balun Coil (75 : 300 ohm)	CA-2942	P-110012
T 501	*Power Transformer Prim : 120 V AC Second : DC 46 V, 2 A AC 8 V, 1.2 A AC 24 V, 0.3 A (Use for UL models)	TA-0567	P-100391
	**Power Transformer Prim : 120 V AC Second : DC 46 V, 2 A AC 8 V, 1.2 A AC 24 V, 0.3 A (Use for C.S.A. models)		P-100421
	***Power Transformer Prim : 230 V/240 V AC Second : DC 46 V, 2 A AC 8 V, 1.2 A AC 24 V, 0.3 A (Use for European & Australian models) VDE approved type		P-100403

REF. NO.	DESCRIPTION		RS PART NO.	MFD. PART NO.
DIODES				
D 101	Ge Diode	1N-60P		
D 102	Varicap	1S 2139B		
D 103	Si Diode	WG-713		
D 104/105	Ge Diode	1N-60P		
D 106	Si Diode	WG-713		
D 107/108	Ge Diode	1N-60P		
D 109/110	Ge Diode	1N-60P		
D 111/112	Ge Diode	1N-60P		
D 113/114	Ge Diode	1N-60P		
D 115	Ge Diode	1N-60P		
D 116	Si Diode	WG-713		
D 201/202	Si Diode	WG-713		
D 401/402	Si Diode	KB-162C5		
D 403/404	Si Varistor	MV-13		
D 405/406	Zener Diode	WZ-130		
D 407/408	Si Varistor	VD-1121		
D 501/502	Si Diode	10D-1 or SR-1K-2		
D 503/504	Si Diode	1S 2762, 3DZ 61, S3V20 or 30D-2		
D 505/506	Si Diode	1S 2762, 3DZ 61, S3V20 or 30D-2		
D 507	Zener Diode	WZ-130		
D 508	Zener Diode	WZ-240		
D 509	Si Diode	10D-1 or SR-1K-2		
D 510/511	Si Diode	KB-162C-5		
FUSES				
	*Use for UL & C.S.A. models			
	Fuse	250 V, 2.5 A (Quick Acting)	HF-0069	P-250008
	Fuse	250 V, 1.5 A (Quick Acting)		P-250007
	Fuse	250 V, 2 A (Quick Acting)		P-250079
	**Use for C.S.A. models only			
	Fuse	250 V, 3 A (Quick Acting with Lead)		P-250014
	***Use for European & Australian models			
	Fuse	250 V, 1.6 A (VDE approved type)		P-250091
	Fuse	250 V, 1.25 A (VDE approved type)		P-250090
	Fuse	250 V, 2 A (VDE approved type)		P-250092
INTEGRATED CIRCUIT				
IC 101	IC	LA-3350		

TRANSISTORS

TR 101	FET	2SK-19 (GR) or 2SK-41 (F)		
TR 102	Si Transistor	2SC 1047 (C, D)		
TR 103	Si Transistor	2SC 930 (D, E)		
TR 104	Si Transistor	2SC 829 (C) or 2SC 929 (D, E)		
TR 105	Si Transistor	2SC 1359 (C, D)		
TR 106/107	Si Transistor	2SC 930 (D, E)		
TR 108/109	Si Transistor	2SC 930 (D, E)		
TR 110/111	Si Transistor	2SC 945A (P) or 2SC 536 (H)		
TR 112	Si Transistor	2SC 945A (P) or 2SC 536 (H)		
TR 201/202	Si Transistor	2SC 923 (U), 2SC 828 (S) or 2SC 536 (H)		
TR 203/204	Si Transistor	2SC 900 (U), 2SC 1571 (H) or 2SC 1681 (BL)		
TR 205	Si Transistor	2SC 945A (P)		
TR 301/302	Si Transistor	2SC 1571 (H), 2SC 900 (U) 2SC 644 (T) or 2SC 1681 (BL)		
TR 303/304	Si Transistor	2SC 923 (E, U), 2SC 828 (S, T) or 2SC 536 (H)		
TR 401/402	Si Transistor	2SC 923 (U) or 2SC 828A (T)		
TR 403/404	Si Transistor	2SC 923 (U) or 2SC 828A (T)		
TR 405/406	Si Transistor	2SB 605 (L, K) or 2SA 720 (R, S)		
TR 407/408	Si Transistor	2SC 1384 (R, S) or 2SD 571 (L, K)		
TR 409/410	Si Transistor	2SB 605 (L, K) or 2SA 684 (R, S)		
TR 411/412	Si Transistor	2SD 313 (D, E)		
TR 413/414	Si Transistor	2SD 313 (D, E)		
TR 501	Si Transistor	2SD 571 (L, K) or 2SC 1384 (R, S)		

VARIABLE CAPACITORS

VC 101-105	Variable Capacitor with Trimmers TC-101, 102, 104 FM : 3 Gang AM : 2 Gang	C-4301	P-150015
TC 103	Trimmer Capacitor 1T-P8 (8 pF)	C-0551	P-160001
TC 105	Trimmer Capacitor 1P x 10 (10 pF)	CA-0249	P-160007

VARIABLE RESISTORS

VR 101	Trimmer Resistor 50 k ohm B	P-6153	P-170037
VR 102	Trimmer Resistor 1 k ohm B	P-6152	P-170036
VR 103	Trimmer Resistor 5 k ohm B	P-6358	P-170070
VR 104	Trimmer Resistor 100 k ohm B		P-170237
VR 201	Potentiometer (VOLUME) 100 k ohm B x 2	P-1666	P-170213
VR 202	Potentiometer (BALANCE) 100 k ohm W	P-1468	P-170078
VR 203	Potentiometer (TREBLE) 100 k ohm A x 2	P-1677	P-170232
VR 204	Potentiometer (BASS) 100 k ohm A x 2	P-1677	P-170232
VR 401/402	Trimmer Resistor 500 ohm B	P-6155	P-170034

REF. NO.	DESCRIPTION	RS PART NO.	MFD. PART NO.
METER			
	AM/FM Signal Strength Meter	M-0305	P-230046
PILOT LAMPS			
PL 1/2/3/4	Pilot Lamp with Socket 8 V, 300 mA (Wedge type)	L-0690	P-240076
PL 5	Stereo Lamp with Lead 6 V, 60 mA	L-0691	P-240075
SB1—SB5	SPEAKERS Switch 3-6-5		P-180185
	Mode Switch		P-180208
S.C.R.			
SCR	SCR 2SF 657 or M21C		
SWITCHES			
PS-1—PS-2	*Power Switch (Use for UL & C.S.A. models)	S-7047	P-180214 or P-180044
	**Power Switch (SEMKO & VDE approved) (Use for European & Australian models)		P-180153
SA-1—SA-6	SELECTOR Switch 3-7-4		P-180187

6. DIAL STRINGING DIAGRAM

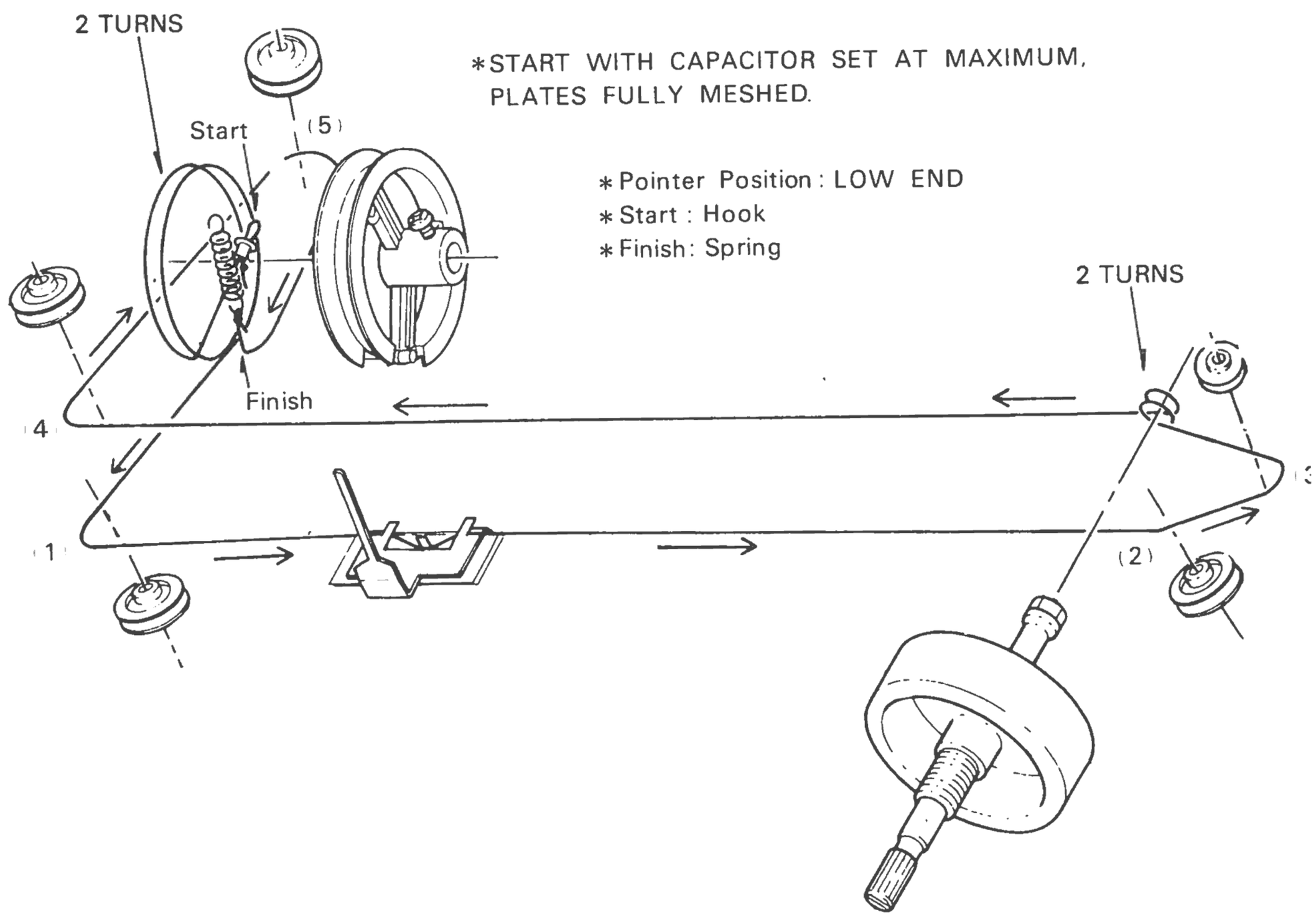

EXPLODED VIEW PARTS LIST

Realistic STA-64 (31-2073)

REF. NO.	DESCRIPTION	RS PART NO.	MFD. PART NO.
1	Front Chassis Ass'y		P-400154
2	Jack Bracket	MB-4684	P-410916
3	Power Switch		
	*Use for UL & C.S.A. models	S-7047	P-180044 or P-180214
	**Use for European & Australian models		P-680153
4	TONE CONTROL Assembled P.C.B.	X-2139	U-14061
5	Rotary Switch (SELECTOR)		P-180187
6	Headphone Jack		P-190096
7	Lever Switch	S-5037	P-180208
8	Rotary Switch (SPEAKER)		P-180185
9	Plate for Dial Scale	RT-0599	P-410901
10	Dial Bracket L	HB-4685	P-410895
11	Sub-Pulley (Large)	RA-2436	P-610162
12	Tuning Bracket Ass'y		P-411078
13	Tuning Shaft Ass'y	D-3199	P-420239
14	Stereo Lamp with Lead	L-0691	P-240075
15	Bushing		P-680098
16	Not used		
17	Sub-Pulley (Small)	D-0280	P-610049
18	Lamp P.C.B.		P-200256
19	Wedge Lamp with Socket	L-0690	P-240076
20	Lamp Bracket	HB-4682	P-410896
21	Dial Reflector	HB-4683	P-610403
22	Dial Scale		
	*Use for UL & C.S.A. models		P-640129
	**Use for European & Australian models		P-640130
23	Meter Ass'y	M-0305	P-230046
24	Dial Side Bracket L	HB-4689	P-700176
25	Dial Side Bracket R	HB-4690	P-700175
26	Pointer Ass'y		P-410422
27	TUNER & IF Assembled P.C.B.	C-4572	U-22021
28	PRE AMP Assembled P.C.B.	X-2138	U-14062
29	MAIN AMP Assembled P.C.B.	X-2140	U-16050
30	POWER SUPPLY Assembled P.C.B.	X-2141	U-17038
31	Lead Wire Holder		P-410030
32	Sub-Pulley Bracket B	HB-4692	P-410889
33	Power Transformer		
	*Use for UL models	TA-0567	P-100391
	**Use for C.S.A. models		P-100421
	***Use for European & Australian models		P-100403
34	Not used		
35	Fiber A		P-480131
36	Fiber B		P-480132
37	Soft Tape		P-680128
38	Back Panel		
	*Use for UL & C.S.A. models	Z-2830	P-410897
	**Use for European models only		P-410917
	***Use for Australian models only		P-410959

REF. NO.	DESCRIPTION	RS PART NO.	MFD. PART NO.
39	AC Cord		
	*Use for UL & C.S.A. models	W-1000	P-310001
	**Use for European models only		P-310068
	***Use for Australian models only		P-310041
40	Cord Stopper		
	*Use for UL, C.S.A. & European models	HB-0598	P-480010
	**Use for Australian models only		P-480037
41	AC Outlet		P-190098
42	Fuse Holder		
	*Use for UL & C.S.A. models	F-1017	P-260007
	**Use for European & Australian models		P-260015
43	Antenna Bracket		
	*Use for UL & C.S.A. models	HB-1110	P-410029
	**Use for European models only		P-410591
	***Use for Australian models only		P-410980
44	Insulation Sheet		
	*Use for UL, C.S.A. & European models	HB-1053	P-480005
	**Use for Australian models only		P-480138
45	Speaker Terminal A	J-4455	P-320086
46	Speaker Terminal B (RCA type)	J-4363	P-320043
47	5P DIN Connector	J-0747	P-190036
48	JACK Assembled P.C.B.	X-7180	U-23036
49	Antenna Terminal		P-320085
50	GND Screw	J-4454	P-420225
51	Antenna Holder	HB-2890	P-410856
52	AM Bar Antenna Coil	CA-3464	P-110064
53	Cord Stopper		P-480010
54	Balun Coil Assembled P.C.B.		
55	Dial Pulley	D-0288	P-610239
56	Dial Spring	RA-5847	P-440014
57	Hook		
58	Dial String		
59	Wire Stay D	HB-2425	P-450032
60	Fuse Assembled P.C.B.		U-25049
61	Fuse Bracket		P-411000
62	Front Panel Ass'y	Z-2831	P-700178
63	Push Button (POWER)	K-2225	P-650203
64	Control Knob (Small)	K-2220	P-650204
65	Control Knob (Large)	K-2229	P-650205
66	Tuning Knob	K-2228	P-650206
67	Lever Knob	K-2227	P-650207
68	Cabinet Ass'y	Z-2832	P-620060
69	Foot	F-0195	P-610361
70	Chassis Ass'y	Z-2829	P-400125
71	Heat Sink	HH-0183	P-410902