REALISTIC®

SOLID STATE HI-FI COMPONENTS

Operating Instructions and Service Data

Model STA-35B

Cat. No. 31-2020

A PRODUCT OF RADIO SHACK®
DIVISION OF TANDY CORPORATION

www.hifiengine.com

SECTION I

INTRODUCTION

The REALISTIC receiver you have just purchased is a high quality stereophonic instrument using the newest solid state transistor and diode devices throughout. Its careful design, quality construction and workmanship are combined with a rational arrangement of controls gracefully styled to give long and satisfying service.

For maximum satisfaction, please read and observe the instructions governing INSTALLATION.

You will notice the smooth, clean transient response your speakers will reproduce. The boomy juke box bass so often predominating in tube amplifiers will be lacking; reproduction of your record or tape library or favorite radio programs will now take on a new dimension. All this due to the inherent "low impedance" characteristics of transistors versus that of the "high impedance" vacuum tube.

Your loudspeaker is a "low impedance" device and is connected directly into the transistor circuitry without the necessity of a transformer to match the high impedance of vacuum tubes. Every transformer regardless of price will have limited range. Eliminating the output transformers allows the speakers to operate without limitation throughout the range and power the transistors are capable of. Loudspeakers are devices for converting electrical energy to mechanical acoustic energy (sound). The loudspeaker cone, the part that moves, should come to a stop as soon as the electrical impulse stops or goes to zero voltage. The inertia of the speaker cone will resist this stop and come to rest only when the inertia or bouncing back and forth dies down due to its own "damping." Just as the automobile safety belt provides a restraining force (damping) to overcome the inertia of the rider at a sudden stop, so does the transistor amplifier of extremely low internal impedance act as a safety belt to prevent the loudspeaker cone from override or false reproduction.

www.hifiengine.com

You will notice the freedom from loss of high frequencies as the volume control is reduced to even the lowest volume. Here again the low impedance of the transistor shows its superiority over the high impedance vacuum tube. Vacuum tube circuits utilize high resistance volume controls which are prone to loss of high frequencies at reduced volume setting. The low resistance volume controls as used in this transistor receiver reduce this loss to an insignificant amount.

The reduction of hum level is quite noticeable as transistors not having any filaments do not require filament power. Most vacuum tube amplifiers use alternating current to light the filaments which always presents a problem of residual background hum.

This transistor receiver is almost one third the weight of a corresponding tube receiver as the output transformers have been eliminated. The efficiency of the transistor is much higher than the vacuum tube, hence a smaller power supply will suffice for a given output power. This results in reduction of heat and power consumed from the AC line.

It is an accepted fact that heat and humidity are the major reasons of failure in electronic equipment. This is especially true when dealing with high voltage high impedance circuits. The maximum voltage applied to any of the transistors in this amplifier is no greater than 50 volts DC. Corresponding vacuum tube amplifiers might use as high as 350 to 400 volts DC. With the possibility of high voltage breakdown of components under humid conditions eliminated, and reduction of heat as explained in the previous paragraph, this transistor amplifier should give you many years of trouble-free enjoyment. Additionally, transistors, solid state devices, do not embody filaments or cathodes that gradually lose their emission or gain relative to the number of hours in use.

* * *

www.hifiengine.com

SECTION II

SPECIFICATIONS

AUDIO

Output Power - 8 ohms	18 watts/channel
Harmonic Distortion	Less than ½% at 1 KC at normal listening level
Frequency Response	± 3 db (20 - 50000) cps
Sensitivity - Mag phono	3 mv
Aux	300 mv
Power Bandwidth	30 - 15000 cps ± 1 db
Equalization - RIAA	± 1 db
Tone Control - @ 50 cps	± 7 db
@ 10000 cps	± 7 db
Loudness Compensation	
50 cps	+ 8 db
10 K cps	+ 5 db
@ - 40 DB Volume, Hum (below rated output)	Residual ····· > 70 db
	Aux ····· > 70 db
	Phono ····· > 60 db

FM

Sensitivity	3 μv for 20 db s/n
Image Rejection	35 db
Drift	Negligible
Multiplex Separation	25 db @ 1000 cps
Tuning Range	88 - 108 mc

AM

Sensitivity	150 μv/m for 20 db s/n
Image Rejection	45 db
Tuning Range	535 - 1605 kc

SECTION III

INSTALLATION

The efficient solid state devices used in the construction of your transistor receiver generate little excess heat despite its compact dimensions and generous power capability. Hence only ordinary logical provisions for ventilation need be made, and the receiver may be situated in almost any convenient location, and may be mounted with its front panel in any direction. An open back cabinet of any dimensions is satisfactory.

When mounting your receiver into an equipment cabinet, the following precautions must be observed:

1. Allow at least 3 inches above the top of the unit.

www.hifiengine.com

2. Allow at least 1 inch on each side of the chassis.
3. Leave the back of your equipment cabinet open to insure proper ventilation.

POWER REQUIREMENTS

Connect the AC line cord into any outlet furnishing 117 volts, 50 or 60 cycles AC current. The voltage may vary between 105 and 125 volts. One AC convenience outlet is located on the rear of the receiver for auxiliary equipment such as a tape deck, record player, or tuner. Power to this outlet is on at all times. This prevents formation of flat spots on the rubber drive wheels and pressure rollers of these units if the power were turned off during their operational cycle.

CONNECTING SPEAKERS

For best results, the two speakers should be identical and of 4 or more ohms impedance rating. Place them about 8 to 15 feet apart against one wall of the listening room. Whether to face the speakers straight out or slant them slightly depends on room size, acoustic effect and the listening area of the room. For best results, experiment with speaker placement. Ordinary lamp (zip) cord type wire should be used to connect speakers. Please take care when using stranded or solid wire that no wires touch the adjacent terminal. Speaker terminal leads on the amplifier, as well as the leads on the speaker itself, should be stripped of insulation approximately 1/2", twisted or tinned to prevent fraying. The bare ends should be formed into a ? mark shape and secured under the terminal screws. Failure in exercising this care will short circuit the output of the amplifier.

Neither conductor of the speaker lines should be connected to a ground. Speaker wires must not inadvertently be shorted together by stapling or chafing during installation.

www.hifiengine.com

STEREO TAPE RECORDER

Since most stereo tape recorders include their own record and playback pre-amplifiers, it is not desirable to connect the output of the recorder into any low level input receptacles. This will result in overloading of the low level stage and cause distortion.

Connect the two tape recorder output leads to the LEFT and RIGHT AUX receptacles on the rear panel of the receiver. This will enable you to play back your stereo tapes.

To make a recording, connect the inputs of your recorder to the LEFT and RIGHT TAPE OUT receptacles. This will enable you to make a stereophonic recording with the proper recording equalization as determined by your recorder, while simultaneously listening to the program material through your speaker system. The recording signals from the TAPE OUT receptacles are unaffected by the tone controls or volume setting of the receiver to insure an absolutely flat response.

SECTION IV
OPERATION

A stereo amplifier is actually two amplifiers in one. The number of operating controls would, therefore, normally be doubled. Since this would make the operation unnecessarily cumbersome, some of the duplicating controls of the MODEL STA-35B receiver are mechanically tied together (ganged) and operated by a single knob.

VOLUME & POWER SWITCH

Volume & Power off: When turned to the right, this control increases the volume; when turned to the left it decreases the volume, and shuts the receiver off.

TUNING CONTROL

The TUNING CONTROL is located directly to the right of the dial glass and is used to select the desired station.

www.hifiengine.com

Schematic Diagram

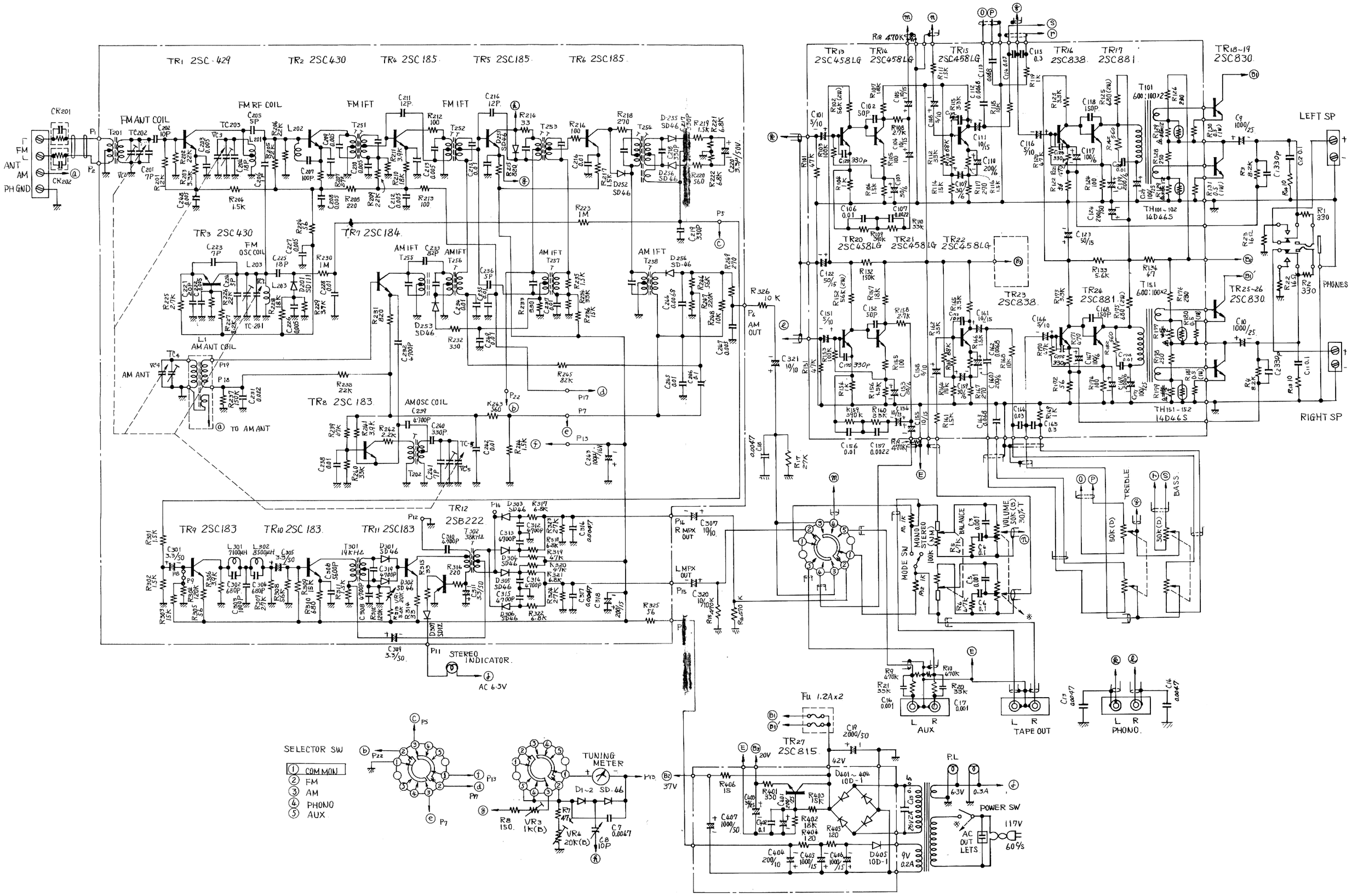

TUNING METER

Your receiver incorporates a D'Arsonval movement tuning meter for precise tuning. The TUNING METER is used to tune to the center of the station channel and proper tuning is achieved when you are on a station and the TUNING METER is at maximum position.

AUTOMATIC LOUDNESS

This receiver has built into it an automatic loudness circuit which becomes active when volume is reduced to a low level. Its purpose is to increase the bass tones while unchanging overall level.

FUNCTION SELECTOR SWITCH

The function selector switch selects the desired type of program source :

1. PHONO-Place selector switch in PHONO position. Some record players, in addition to the two output plugs, have a single wire lead for grounding the metal base or motor frame. Connect this lead to the GROUND binding post.

www.hifiengine.com

2. AUX- This position selects any high level equipment such as the output of your tape recorder, television set, or any other high level signal which is connected to the AUX receptacles on the rear of the receiver.
3. FM - In this position all monophonic and stereophonic FM broadcasts are reproduced. Illumination of stereo indicator light when tuned to an FM station indicates stereo MPX broadcasting. For stereo listening, selector switch should be placed in FM STEREO position.
4. AM - In this position all standard AM broadcasts are reproduced by your system.

BASS and TREBLE CONTROLS

The full range of tonal adjustment required for high fidelity listening is provided for by the BASS and TREBLE controls. They increase or decrease the bass and treble tones and should be set in accordance with listening preference, speaker characteristics, and room acoustics.

BALANCE CONTROL

To attain the greatest degree of faithfulness and space distribution in stereo reproduction, it is necessary to use two identical channels. A variation in the efficiency of one of the channels will disturb this relationship. Since there is apt to be a slight difference between the two speakers, tape heads, etc., a way must be provided for balancing one channel against the other. The balance control covers a sufficient range to allow balancing the over-all system, even where major unbalance exists.

It should be noted that the BALANCE control may be set anywhere within its range of adjustment to attain system balance.

www.hifiengine.com

MODE SWITCH

In the MONO position all progam material (stereo or mono) will be reproduced monophonically. In the STEREO position, all stereo program material will be reproduced stereophonically and all monaural program material will be reproduced monophonically.

PHONES

Stereo headphones, either high or low impedance may be plugged into the PHONE jack. A resistive matching network is incorporated in this amplifier so that the output of the headphones matches approximately the listening level of the speakers. Speakers are automatically disconnected when headphones are used.

www.hifiengine.com

SPEAKER PHASING

For optimum sound and maximum bass response in a stereo or multiple speaker monaural system, the speakers must be connected in the same polarity, in phase, (all speaker cones should move in the same direction when an equal signal is applied to both speakers simultaneously). If directions as outlined in paragraph CONNECTING SPEAKERS are followed, there will not be any need for checking this. In such instances where there is doubt as to the correct speaker phase, adjust system for proper balance as outlined in paragraph BALANCE. Reverse the leads that feed either one of the speakers. If the over-all volume especially the lower frequencies increases, the speakers are in phase. If the over-all volume decreases, the speakers are out of phase and the leads should be returned to their original connection.

An alternate method of checking phase is possible if the leads to the speakers are long enough so that both loudspeakers can be placed side by side. With both loudspeakers facing you, reverse the leads to one of the speakers. If the over-all volume, especially the low frequencies, increases, the speakers are in phase. If the over-all volume decreases, the speakers are out of phase and the leads should be returned to their original connection.

www.hifiengine.com

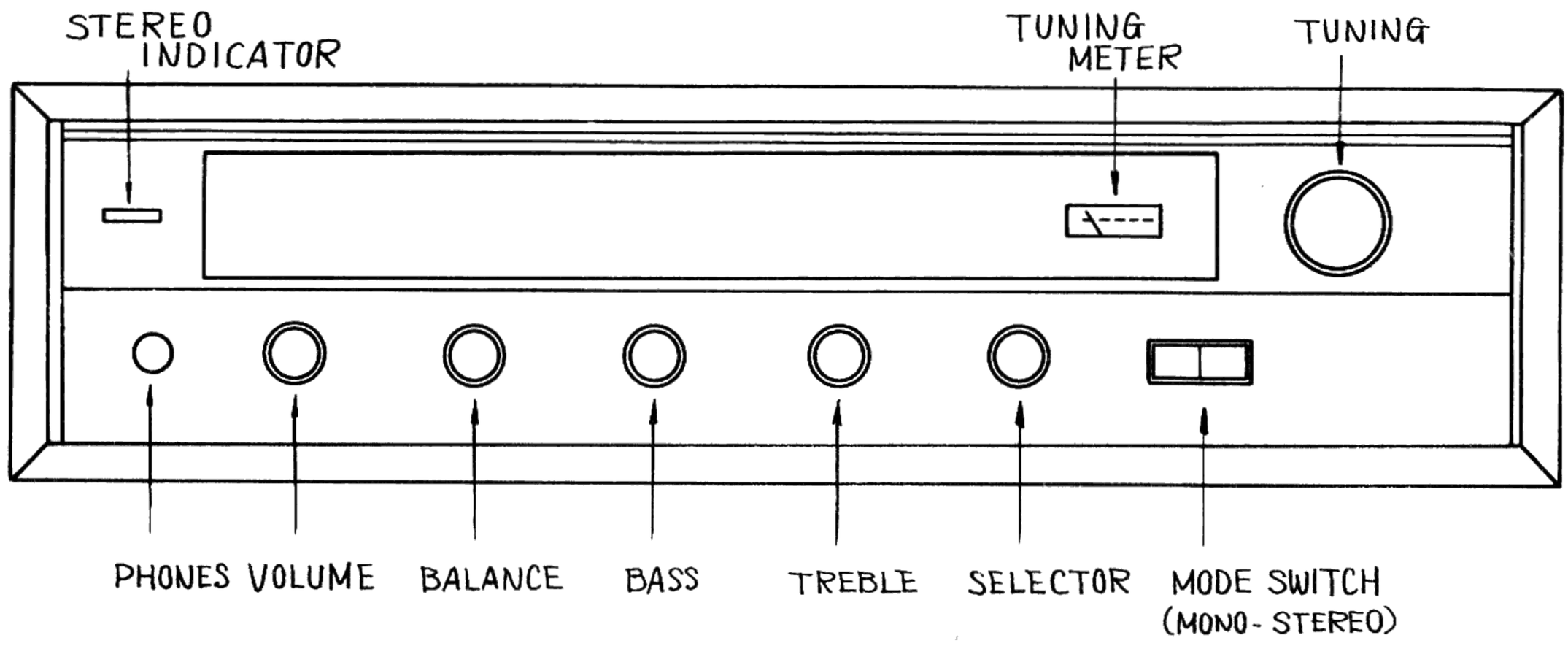

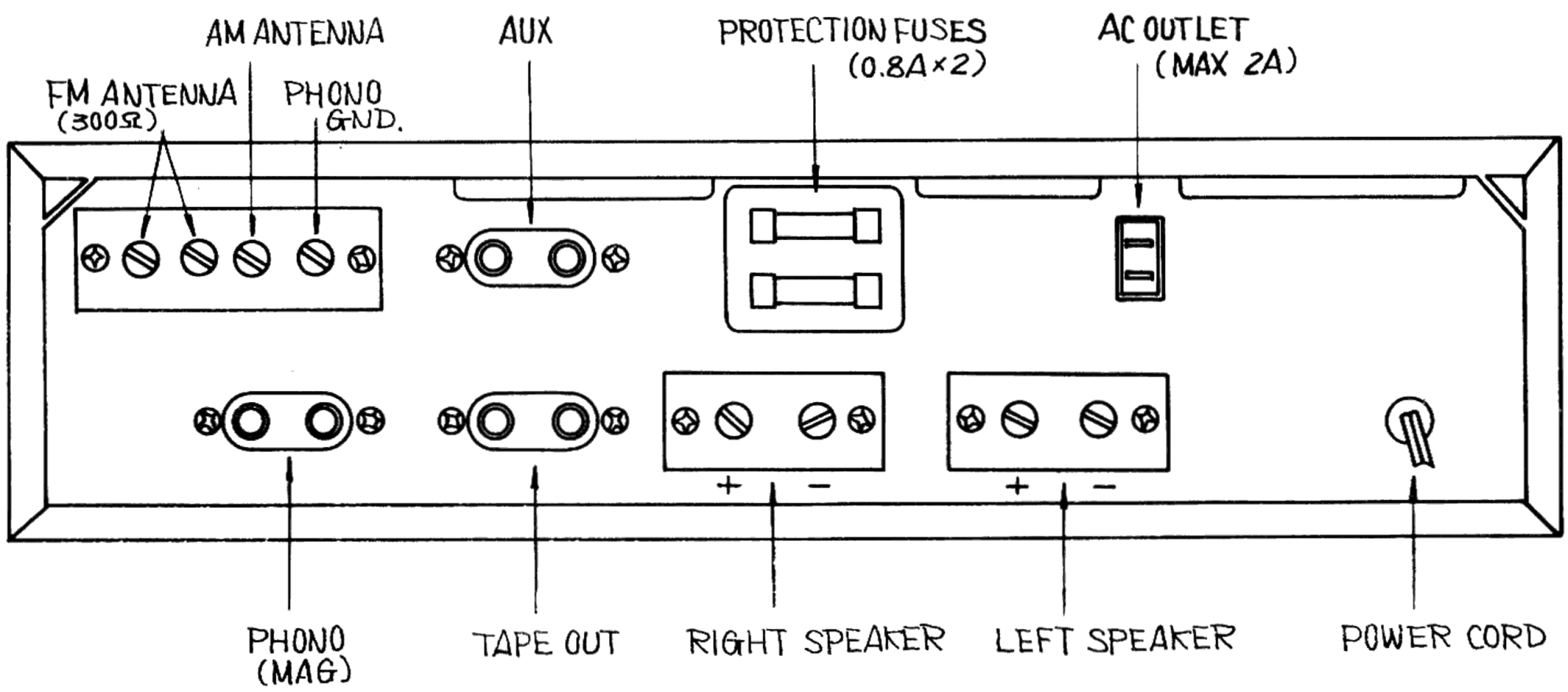

www.hifiengine.com

WARRANTY and SERVICE

Your REALISTIC STA-35B is warranted to be free from defects in materials and workmanship for a period of 90 days from date of purchase. To assure your rights under this warranty, be certain to mail the enclosed Warranty Registration Card within 10 days of your purchase.

Your Warranty may be voided for any of the following reasons :

1. Damage in transit due to inadequate packing for shipment or shipment by any carrier other than prepaid REA Express.

   DO NOT SHIP BY PARCEL POST.
2. Abuse in handling or repair by unqualified persons.
3. Short-circuiting of the speaker output terminals.

To obtain service under the warranty, contact the store from which purchased, giving Model Number and Serial Number and a description of the fault in operation. If your receiver was purchased by mail, send this information instead to :

Service Department
RADIO SHACK
Division of Tandy Corporation
730 Commonwealth Avenue
Boston, Massachusetts 02215

Instructions for obtaining warranty service will be sent to you. If factory service is judged necessary, a letter authorizing you to send receiver for repair will be sent to you, together with shipping instructions. DO NOT SHIP YOUR RECEIVER WITHOUT FIRST OBTAINING WRITTEN AUTHORIZATION from Radio Shack.

If service is required after the free warranty service period has expired, follow same procedure as above for warranty service. Fair charges will be made for factory service by skilled personnel using original parts.

www.hifiengine.com

Printed in Japan

www.hifiengine.com