MODEL STA-18 CIRCUIT DIAGRAM

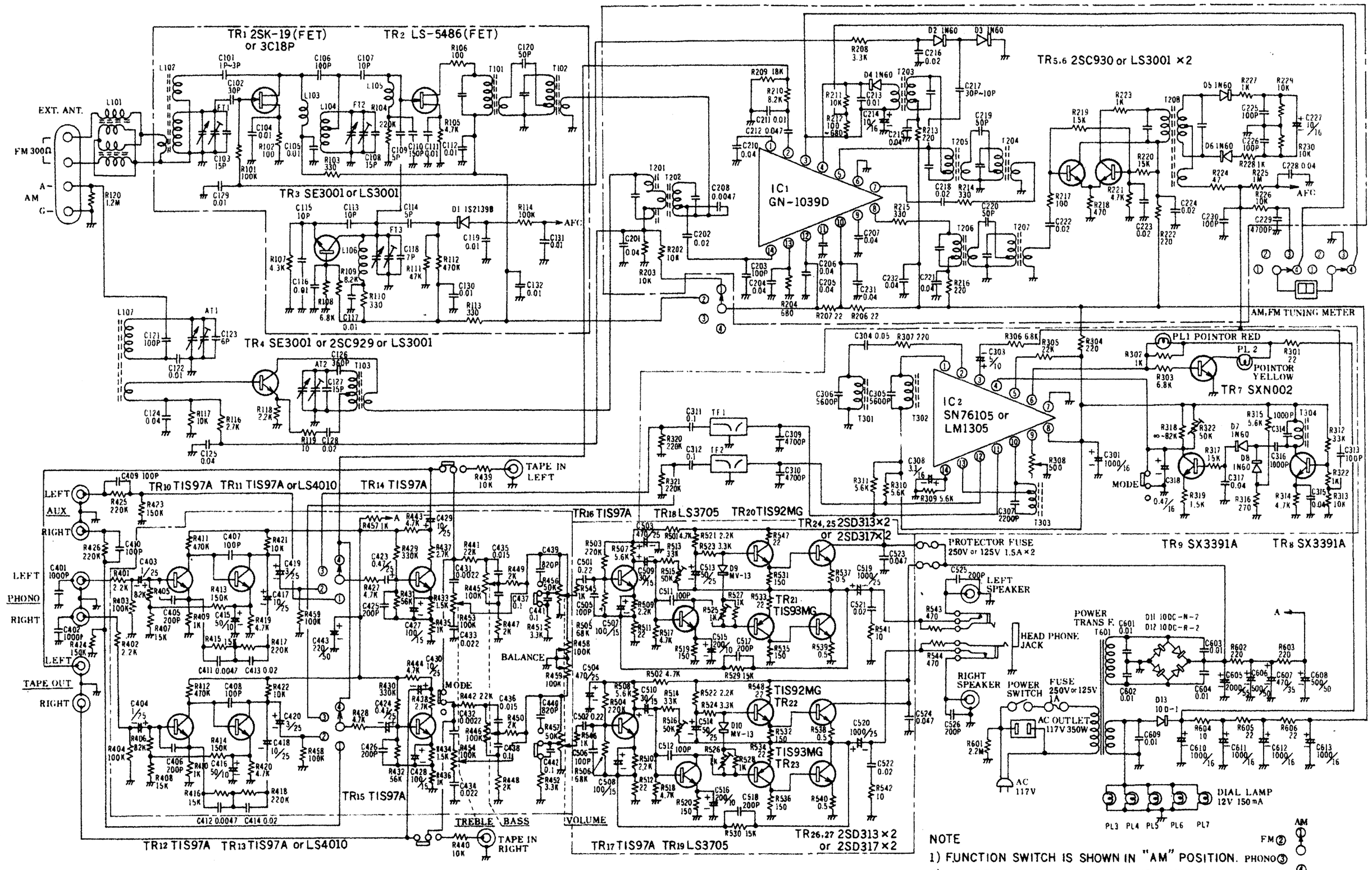

NOTE

1) FUNCTION SWITCH IS SHOWN IN "AM" POSITION.
2) ALL RESISTANCE VALUES ARE INDICATED IN OHM ($K=10^3$ OHM).
3) ALL CAPACITANCE VALUES ARE INDICATED IN μF ($P=10^{-6}$ μF).