SCHEMATIC DIAGRAM STA – 4030

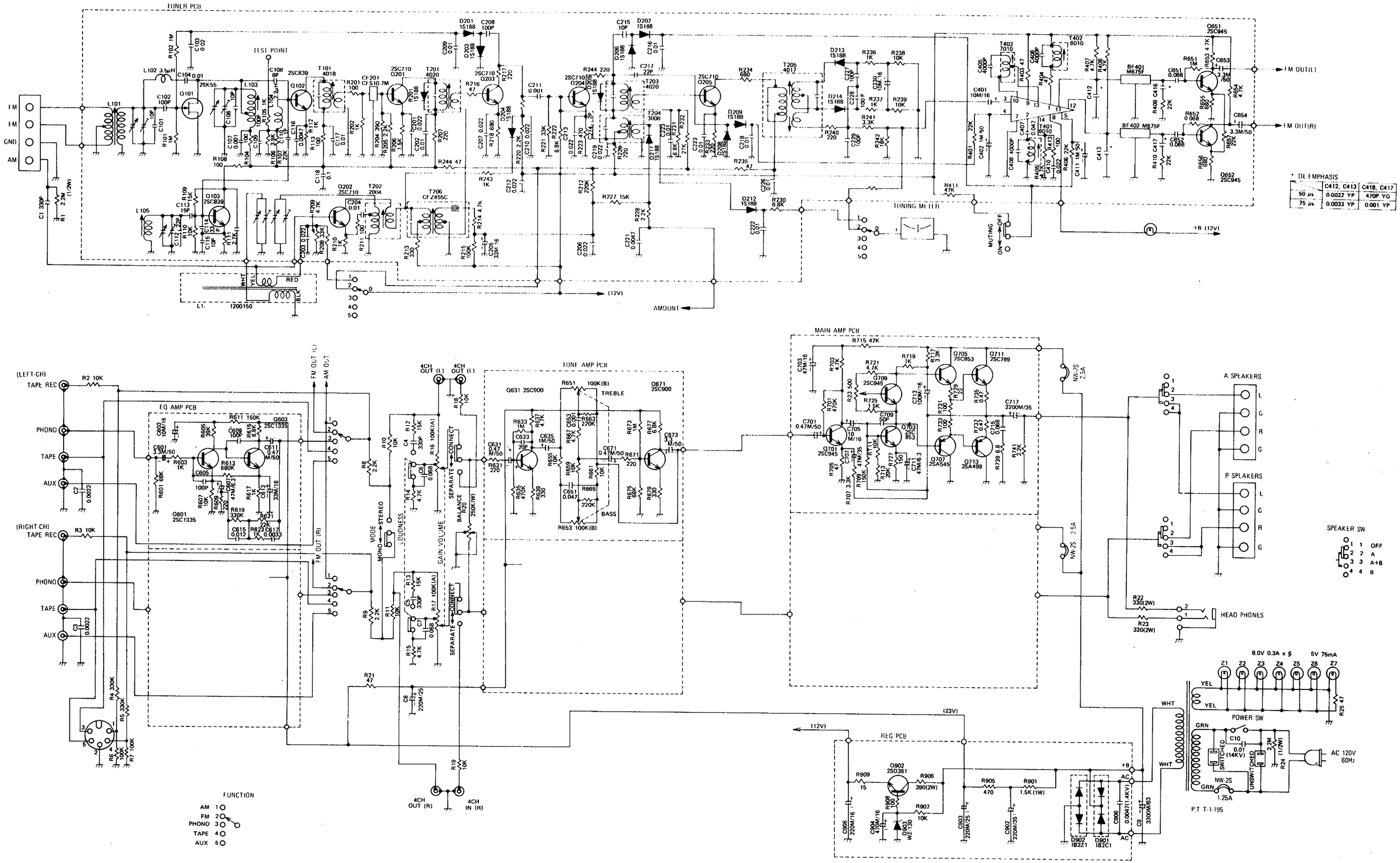

961102E