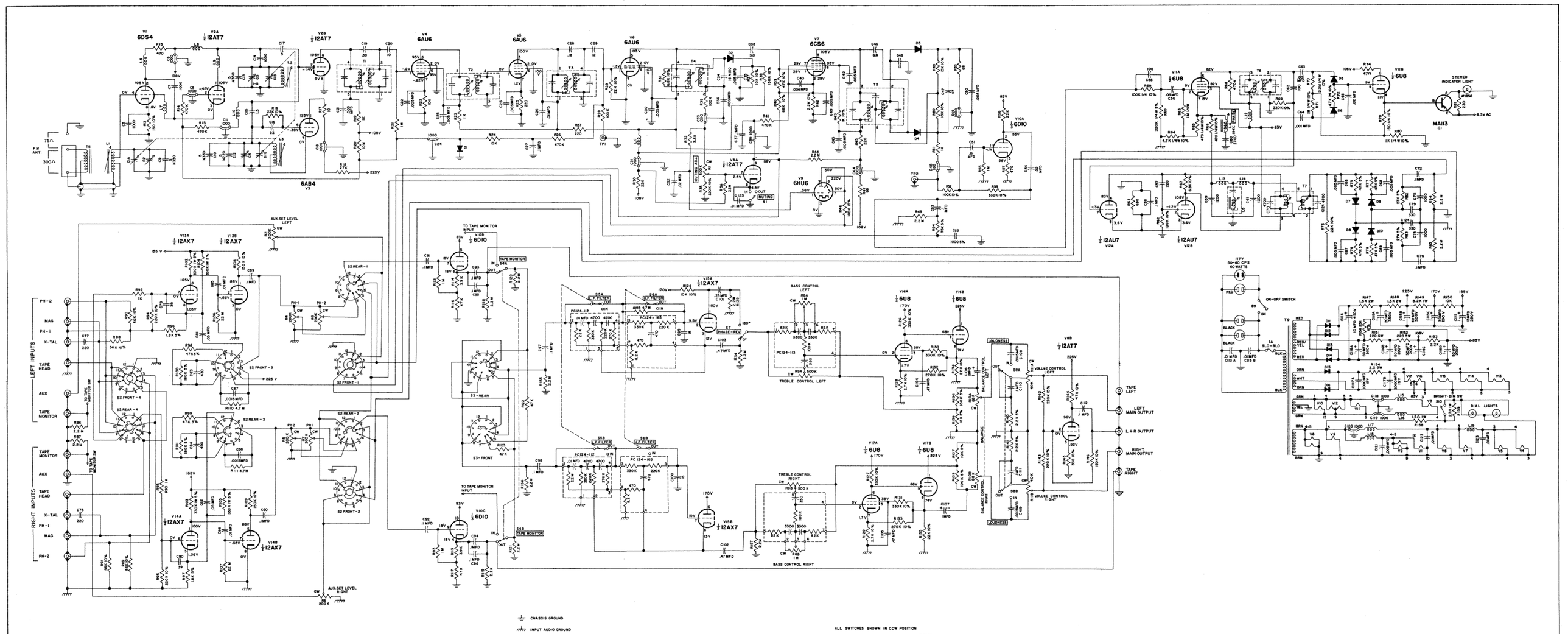
6DS4
12AT7
6AU6
6CS6
6AB4
6HU6
6DJ10
12AX7
6U8
12AU7
12AT7
MA113
STEREO INDICATOR LIGHT
FM ANT.
75Ω
300Ω
LEFT INPUTS
RIGHT INPUTS
PH-2
MAG
PH-1
X-TAL
TAPE HEAD
AUX
TAPE MONITOR
AUX. SET LEVEL LEFT
AUX. SET LEVEL RIGHT
TO TAPE MONITOR INPUT
TAPE MONITOR
S2 REAR-1
S2 REAR-2
S2 REAR-3
S2 REAR-4
S2 FRONT-1
S2 FRONT-2
S2 FRONT-3
S2 FRONT-4
S3-REAR
S3-FRONT
S4A
S4B
S5A
S5B
S6A
S6B
S7
PHASE-REV
BASS CONTROL LEFT
TREBLE CONTROL LEFT
TREBLE CONTROL RIGHT
BASS CONTROL RIGHT
BALANCE CONTROL
LOUDNESS
VOLUME CONTROL LEFT
VOLUME CONTROL RIGHT
TAPE LEFT
LEFT MAIN OUTPUT
L + R OUTPUT
RIGHT MAIN OUTPUT
TAPE RIGHT
ON-OFF SWITCH
DIAL LIGHTS
BRIGHT-DIM SW
MUTING
MUTING S1
CHASSIS GROUND
INPUT AUDIO GROUND
OUTPUT AUDIO GROUND
ALL SWITCHES SHOWN IN CCW POSITION
FM
MPX
AUX
PHONO 1
PHONO 2
TAPE HD
INPUT SELECTOR SWITCH, S2
STEREO REV
R TO L & R
L TO L & R
STEREO
MONO (L+R)
L+R TO L
L+R TO R
MODE SELECTOR SWITCH, S3
ALL VOLTAGES MEASURED UNDER FOLLOWING CONDITIONS:
1 - USE OF 11 MEGOHMS INPUT IMPEDANCE VTVM VOLTMETER.
2 - ALL VOLTAGES ±10%, WITH RESPECT TO GROUND.
3 - A.C. INPUT AT 117 V 50-60 CPS.
4 - NO SIGNAL AT ANTENNA AND OTHER INPUT TERMINALS.
5 - FRONT PANEL CONTROLS AT
MODE SELECTOR - STEREO
INPUT SELECTOR - MPX
VOLUME CONTROL - MAX
BALANCE CONTROL - ZERO
TONE CONTROLS - FLAT
MUTING - OUT
LF/HF FILTERS - OUT
LOUD - OUT
TAPE MONITOR - OUT
PHASE - 0°
UNLESS OTHERWISE SPECIFIED
ALL RESISTORS 1/2 W 20%
ALL CAPACITORS IN PF
ALL INDUCTORS IN MICRO H
FM. IF: 10.7 MC
SCHEMATIC, MX110
McIntosh LABORATORY INC.
MX110
DATE: 1-24-63
SC 142-199