SERVICE MANUAL

PM551/PM451

marantz®

model PM551/PM451

Stereo Amplifier

TABLE OF CONTENTS

SECTION	PAGE
INTRODUCTION	1
1. SHOCK, FIRE HAZARD SERVICE TEST	1
2. P.W. BOARDS	1
3. TEST EQUIPMENT REQUIRED FOR SERVICING	2
4. VOLTAGE CONVERSION	2
5. CIRCUIT DESCRIPTION	3
6. BLOCK DIAGRAM	9
7. DIAGRAM AND COMPONENT LOCATIONS	10
7.1 Graphic Equalizer Assembly (PF00) Schematic Diagram and Component Locations	10
7.2 Visual Selecter Assembly (PL00) Schematic Diagram and Component Locations	10
7.3 Input Selecter Assembly (PS00) Schematic Diagram and Component Locations	11
7.4 VD Input Assembly (PV00) Schematic Diagram and Component Locations	11
7.5 VCR EASY Remote Input Assembly (PW00) Schematic Diagram and Component Locations	11
7.6 Front Switch Assembly (PU00) Schematic Diagram and Component Locations	13
7.7 Main Amp. Assembly (P700) Schematic Diagram and Component Locations	14
7.8 Volume Indicater Assembly (PU50) Schematic Diagram and Component Locations	14
7.9 Speaker Switch Assembly (PT00) Schematic Diagram and Component Locations	15
8. EXPLODED VIEW AND PARTS LIST	16
9. ELECTRICAL PARTS LIST	20
10. TECHNICAL SPECIFICATIONS	24
11. SCHEMATIC DIAGRAM	26

How to use this service manual

- The "Common parts" which Marantz Japan, Inc. has established are eliminated from this service manual.
- These "Common parts" are applied to all models in the service manuals arranged and issued by MJI.
- To indicate clearly the common parts in the schematic diagram, a line is drawn above or under the Ref. Desig. No. of applicable parts.
- "Common parts" can be supplied from the Marantz service center as ever.
  In case of ordering, please establish the parts number of 10 figures following the procedure mentioned in this service manual "How to establish the parts number for common parts".

(NOTE)

When you order parts to the Marantz parts center, please take notice of the following points.

1) Please correctly write the parts number of 10 figures following the rule.
2) Since ordering parts by the Ref. Desig. No. or ratings indicated in the schematic diagram does not satisfy the above conditions, the Marantz parts supply system does not work properly.
   As this case is apt to cause a trouble, please pay attention to it.

MODEL PM451/PM551 STEREO AMPLIFIER

PM451 - Front (Version N)

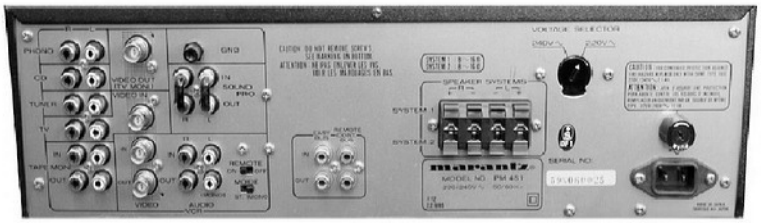

PM451 - Rear (Version N)

INTRODUCTION

This service manual was prepared for use by Authorized Warranty Stations and contains service information for the Marantz Model PM451/PM551 Stereo Amplifier.

Servicing information and voltage data included in this manual are intended for use by knowledgeable and experienced personnel only. All instructions should be read carefully. No attempt should be made to proceed without a good understanding of circuitry operation.

The parts list furnishes complete ordering information. Most replacement parts should be ordered from the Marantz Company. However, a simple description is included for parts which can be obtained locally.

1. SHOCK, FIRE HAZARD SERVICE TEST

CAUTION: After servicing this appliance and prior to returning to customer, measure the resistance between either primary AC cord connector pins (with unit NOT connected to AC mains and its Power switch ON), and the face or front Panel of product and controls and chassis bottom.

Any resistance measurement less than 1 Megohms should cause unit to be repaired or corrected before AC power is applied, and verified before return to user/customer.

Ref. UL Standard No. 1270. Para. 66. 3. D (Mandatory Test after servicing Electrical Appliances, effective 7-1-83).

2. P.W. BOARDS

As can be seen from the circuit diagram the chassis of Model PM451/PM551 consists of the following units. Each unit mounted on a printed circuit board is discribed within the square enclosed by a bold dotted line on the circuit diagram.

1. **Main Amp . . . . . mounted on P.W. Board P700**
2. **Graphic Equalizer . . . mounted on P.W. Board PF00**
3. **Visual Selecter . . . . . mounted on P.W. Board PL00**
4. **Input Selecter . . . . . mounted on P.W. Board PS00**
5. **Speaker Switch . . . . mounted on P.W. Board PT00**
6. **Front Switch . . . . . mounted on P.W. Board PU00**
7. **Volume Indicater . . . mounted on P.W. Board PU50**
8. **VD Input . . . . . mounted on P.W. Board PV00**
9. **VCR EASY Remote Input . . . . . mounted on P.W. Board PW00**

VERSION CODES

(U) : for U.S.A.
(N) : for Europe
(E) : for Europe
(A) : for Australia
(F) : for Japan

Available with either Black or Silver faceplate

3. TEST EQUIPMENT REQUIRED FOR SERVICING

This table lists the test equipment required for servicing the Model PM451/PM551 Stereo Amplifier.

Item	Use
Distortion Analyzer	Distortion measurements
Audio Oscillator	Sinewave and squarewave signal source
AC VTVM	Voltage measurements (AC)
Oscilloscope	Waveform analysis and trouble shooting and ASO alignment
Circuit Tester	Trouble shooting
DC VTVM	Voltage measurements (DC)
AC Wattmeter	Monitors primary power to amplifier
Line Voltmeter	Monitors potential of primary power to amplifier
Variable Autotransformer (0 ~ 140V AC, 10A)	Adjust level of primery power to amplifier
Shorting Plug	Shorts amplifier input to eliminate noise pickup

4. VOLTAGE CONVERSION

To convert the unit to a different power source voltage, change the position as illustrated in the drawing below.

CAUTION: DISCONNECT POWER SUPPLY CORD FROM AC OUTLET BEFORE CONVERTING VOLTAGE. DO NOT DISASSEMBLE THE VOLTAGE SELECTOR ABSOLUTELY.

Note on safety:

Symbol ⚠ Fire or electrical shock hazard. Only original parts should be used to replace any part marked with symbol ⚠. Any other component substitution (other than original type), may increase risk of fire or electrical shock hazard.

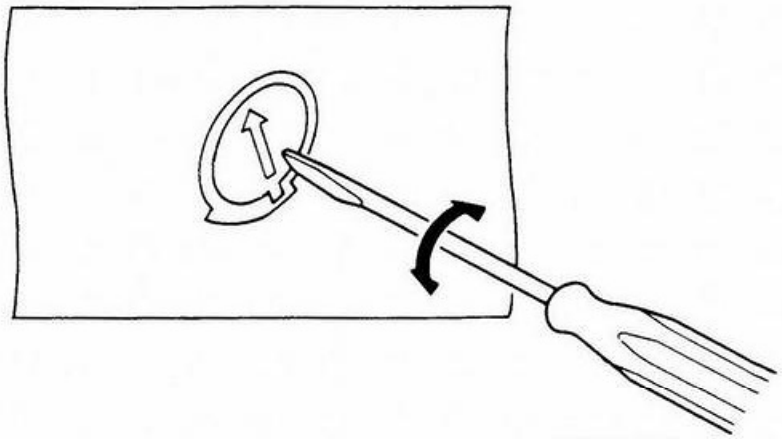

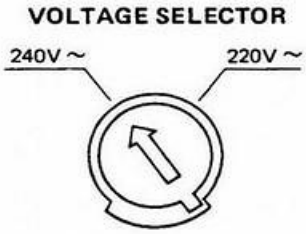

(N, A) Version

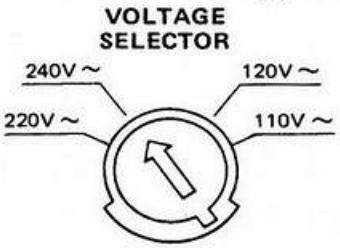

(E) Version

5. CIRCUIT DESCRIPTION

SINGLE-CHIP 4-BIT MICROCOMPUTER LC6502C (QU01)

BLOCK DIAGRAM

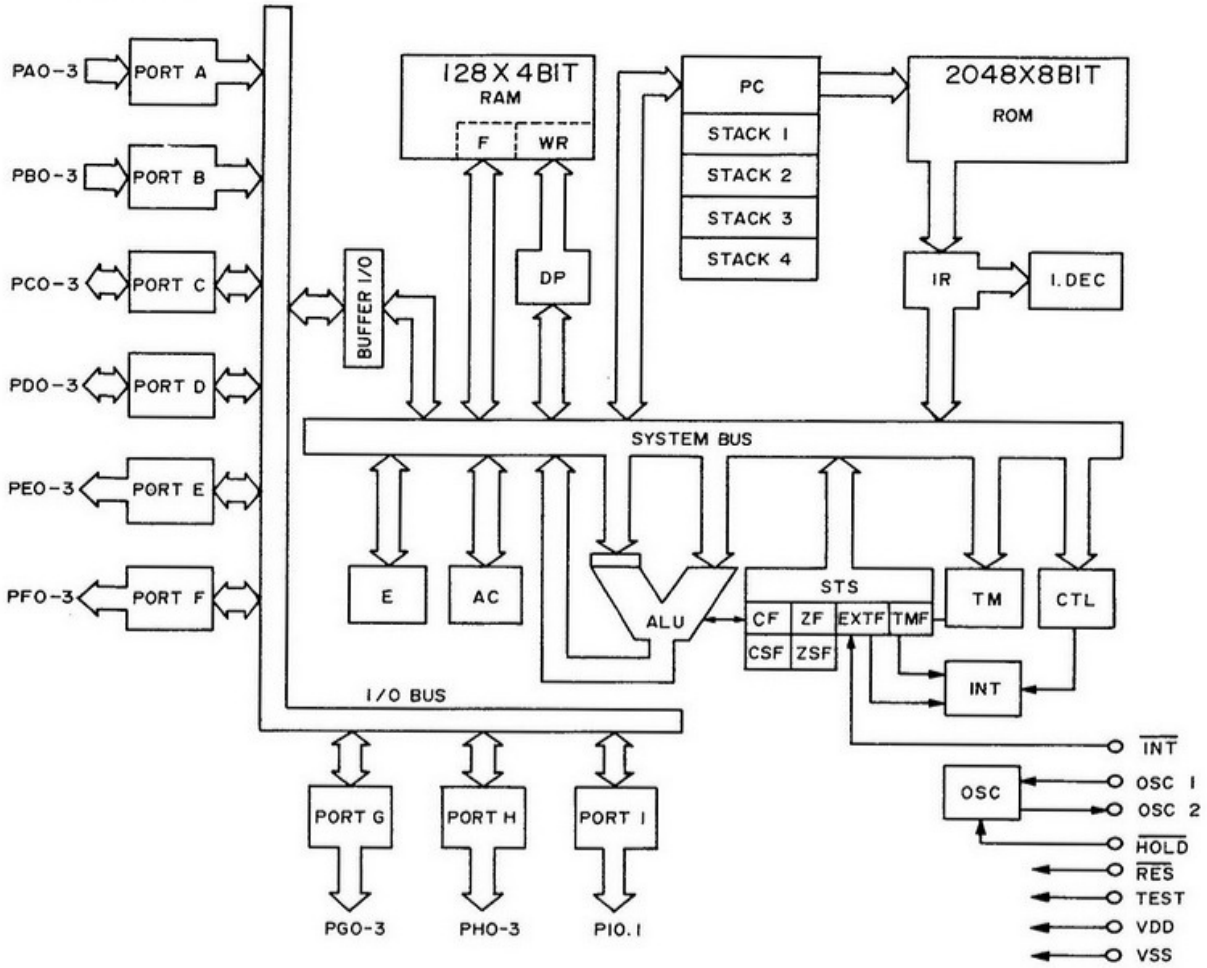

RAM:	data memory	ROM:	program memory
F:	flag	PC:	program counter
WR:	working register	INT:	interrupt control
AC:	accumulator	IR:	instruction register
ALU:	logical operator unit	I. DEC:	instruction decoder
DP:	data pointer	CF, CSF:	carry flag, carry save flag
E:	E register	ZF, ZSF:	zero flag, zero save flag
CTL:	control register	EXTF:	external interrupt request flag
OSC:	oscillator circuit	TMF.	internal interrupt request flag
TM:	timer		
STS:	status register		

Terminal Connections

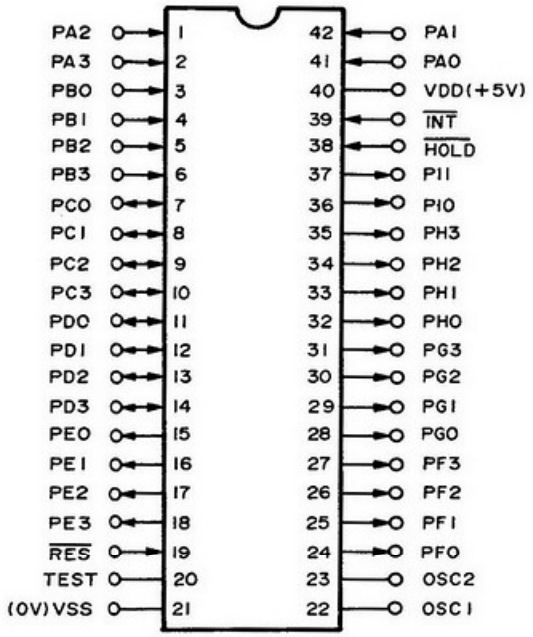

Terminal Function

Terminal Name	I/O	Function
$\overline{INT}$	Input	Pseudo interrupt request input terminal.
$\overline{HOLD}$	Input	Hold mode request input terminal.
$\overline{RES}$	Input	Reset input terminal.
$PA_{3\text{-}0}$	Input	Input ports A_3 to A_0 In input mode, 4-bit input and bit test are allowed. Used for HALT mode release and request input.
$PB_{3\text{-}0}$	Input	Input ports B_3 to B_0 In input mode, 4-bit input and bit test are allowed.
$PC_{3\text{-}0}$	I/O	I/O ports C_3 to C_0 In input mode, 4-bit input and bit test are allowed. In output mode, 4-bit output, bit set/reset output are allowed.
$PD_{3\text{-}0}$	I/O	I/O ports D_3 to D_0 In input mode, 4-bit input and bit test are allowed. In output mode, 4-bit output, bit set/reset output are allowed.
$PE_{3\text{-}0}$	Output	Output ports E_3 to E_0 4-bit output and bit set/reset are allowed. Input of output latch contents in 4-bit units and testing of output latch of bit is possible.
$PF_{3\text{-}0}$	Output	Output ports F_3 to F_0 4-bit output and bit set/reset are allowed. Input of output latch contents in 4-bit units and testing of output latch of bit is possible.
$PG_{3\text{-}0}$	Output	Output port G_3 to G_0 4-bit output and bit set/reset are allowed. Input of output latch contents in 4-bit units and testing of output latch of bit is possible.
$PH_{3\text{-}0}$	Output	Output ports H_3 to H_0 4-bit output and bit set/reset are allowed. Input of output latch contents in 4-bit units and testing of output latch of bit is possible.
$PI_{0,1}$	Output	Output ports $I_{0,1}$ 2-bit output and bit set/reset are allowed. Input of output latch contents in 4-bit units and testing of output latch of bit is possible.
OSC1	Input	Terminal operated with clock signal externally supplied. A ceramic resonatoe and CR are connected to th space between the X'tal and this terminals when using the local clock signal oscillator.
OSC2	I/O	External terminal of the resonance circuit for loal clock signal oscillation.
V_{DD}	Input	Power terminal, usually connected to +5V.
V_{SS}		Connected to 0V of power supply.
TEST	Input	LSI test terminal, usually connected to V_{SS} (0V).

Maximum Ratings ($Ta = 25°C$, $V_{SS} = 0V$)

Item	Symbol	Condition	Min.	Max.	Unit
Maximum supply voltage	V_{DD} max.		−0.3	+7	V
Input voltage	V_{IN}		−0.3	V_{DD}+0.3	V
Output voltage	V_{OUT}	Output transistor OFF	−0.3	V_{DD}+0.3	V
Allowable power dissipation	P_d max.	−30°C to +70°C		350	mW
Ambient operating temperature	T_{opg}		−30	+70	°C
Ambient storage temperature	T_{stg}		−55	+125	°C

ELECTRON VOLUME IC TC9177P (QS03)

BLOCK DIAGRAM

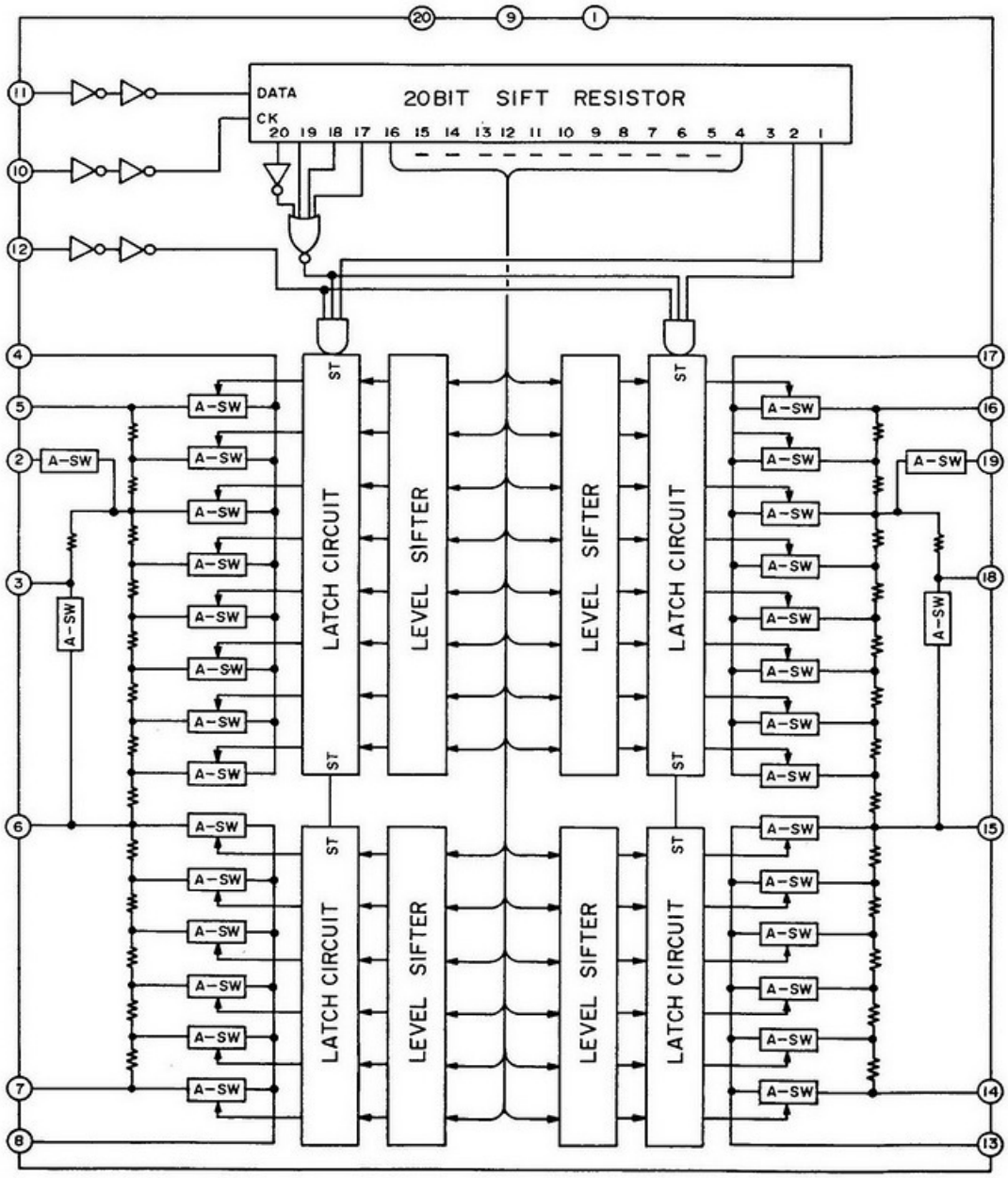

Terminal Connections

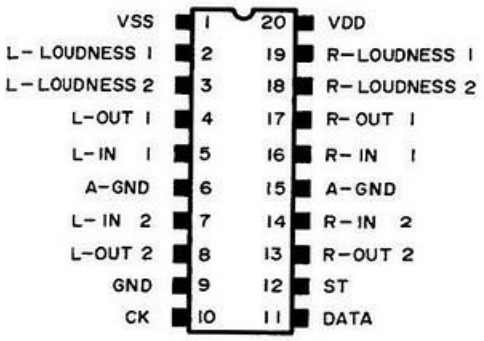

Terminal Function

Pin No.	Name	Function Description
2, 3 18, 19	L-LOUDNESS 1, 2 R-LOUDNESS 1, 2	Pins for loudness When loudness data is input, these pins becomes −20 dB dampened pins. Loudness control is possible through the connection of high and low range boosting circuits to these pins.
4, 17	$L\text{-}OUT_1$ $R\text{-}OUT_1$	10 dB step attenuator output. The signal applied to IN is attenuated in 8 10 dB steps from 0 to 70 dB.
5, 16	$L\text{-}IN_1$ $R\text{-}IN_1$	10 dB attenuator input.
6, 15	A-GND	AC ground pin.
7, 14	$L\text{-}IN_2$ $L\text{-}IN_2$	2 dB attenuator pin.
8, 13	$L\text{-}OUT_2$ $R\text{-}OUT_2$	2 dB attenuator output. The signal applied to IN is attenuated in 5 2 dB steps from 0 to 8 dB.
11	DATA	Data input for amount of attenuation and channel selection. Input by CK signal, configurated in 20 bits.
10	CK	Clock input. Clock input for fetching data from DATA pin.
12	ST	Strobe input. The data for the amount of attenuation and channel selection fetched from the DATA and CK pins is latched when this pin is "high". The previous data remains effective when a high level is not applied to this pin.
20	V_{DD}	Pin for (+) voltage.
9	GND	Ground pin.
1	V_{SS}	Pin for (−) voltage.

Maximum Ratings (Ta = 25°C)

Item	Symbol	Ratings	Unit
Supply voltage	V_{DD}	$V_{SS}-0.3 \sim V_{SS}+36$	V
Input voltage	V_{IN}	$V_{SS}-0.3 \sim V_{DD}+0.3$	V
Power dissipation	P_D	300	mW
Operating temperature	T_{opr}	−30 ~ 75	°C
Storage temperature	T_{stg}	−55 ~ 125	°C

Electrical Characteristics (V_{DD} = 15V, V_{SS} = −15V Ta = 25°C)

Item		Symbol	Test Condition		Min.	Typ.	Max.	Unit
Operating power voltage range		$V_{DD}-V_{SS}$			7.5	~	32	V
Operating supply current		I_{DD}				0.5	3.0	mA
Input voltage	"H"	V_{IH}	DATA, CK, ST terminal		4.0	~	V_{DD}+0.3	V
Input voltage	"L"	V_{IL}			−0.3	~	1.0	V
Total resistance value (ATT_1)		R_{ATT_1}			90	120	160	KΩ
Total resistance value (ATT_2)		R_{ATT_2}			10	14	20	KΩ
Step error (ATT_1)		$STEP_{(1)}$	f_{in}=DC~20 kHz R_L=∞	0 ~ 30 dB	9.2	10	10.8	dB
				−40 ~ 70 dB	8.8		11.8	
Step error (ATT_2)		$STEP_{(2)}$	f_{in}=DC~20 kHz R_L=∞		−1.2	2	2.8	dB
Total harmonic distortion (ATT_1)		$THD_{(1)}$	f_{in}=20~20 kHz, V_{in}=1.0Vrms 0 dB			0.003	0.005	%
Total harmonic distortion(ATT_2)		$THD_{(2)}$	f_{in}=20~20 kHz, V_{in}=1.0Vrms 0 dB			0.003	0.005	%
Maximum amount of attenuation		$ATT_{(max.)}$			90			dB
Output noise voltage		V_N	0 dB Position f_{out}=20~20 kHz R_g=1KΩ			2	10	μVrms
Channel separation		C.S	V_{in}=1 Vrms f_{in}=1 kHz		80			dB
CONTROL INPUT SECTION								
Maximum operating frequency		$f_{(max)}$					500	kHz
Minimum clock width ("H")		$T_{CK(H)}$			1.0			μsec
Minimum clock width ("L")		$T_{CK(L)}$			1.0			μsec

HIGH VOLTAGE RESISTING ANALOG FUNCTION SWITCH ARRAY TC9163N (QS01)

BLOCK DIAGRAM

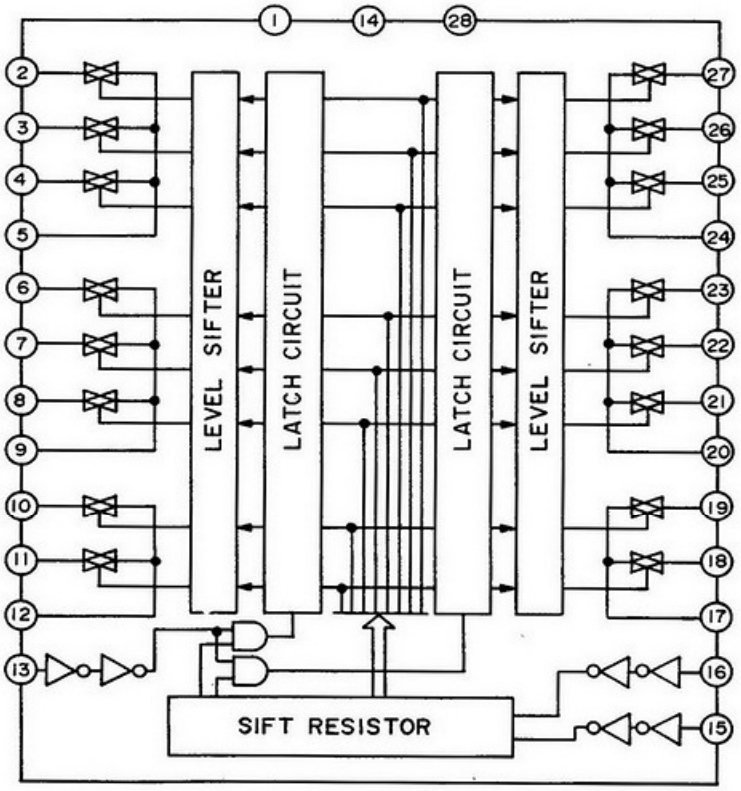

Terminal Connections

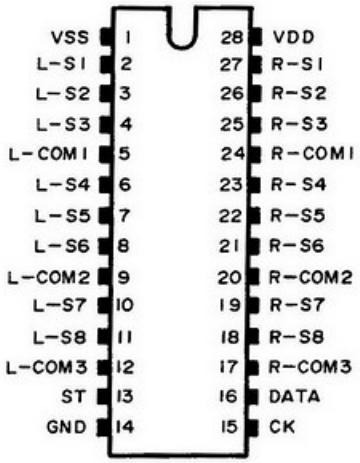

Maximum Ratings

Item	Symbol	Ratings	Unit
Supply voltage (1)	V_{DD} V_{SS}	34	V
Supply voltage (2)	V_{DD} GND	17	V
Input voltage	V_{IN}	$V_{SS}-0.3 \sim V_{DD}+0.3$	V
Power dissipation	P_D	300	mW
Operating temperature	T_{opr}	−30 ~ 75	°C
Storage temperature	T_{stg}	−55 ~ 125	°C

Electrical Characteristics (V_{DD}=16V, V_{SS}=−16V, GND=0V, Ta=25°C)

Item	Symbol	Test Condition	Min.	Typ.	Max.	Unit
Operating supply voltage (1)	$V_{DD}-GND$		8	~	16	V
Operating supply voltage (2)	$GND-V_{SS}$		−8	~	−16	V
Operation supply current	I_{DD}	V_{DD}=16V, V_{SS}=−16V, GND=0V	–	~	3	mA
Backup voltage	V_B		4	~	16	V
Backup current	I_B	V_{DD}=4.0V, V_{SS}=GND=0V	–	1	10	μA
High level input voltage	V_{IH}	V_{DD}=16V, CK, DATA, ST	4	–	16	V
Low level voltage	V_{IL}	V_{DD}=16V, CK, DATA, ST	0	–	10	V
Operating minimum pulse width	t_{in}		5	–	–	μsec
Switch ON resist.	R_{ON}		–	100	200	Ω
Total harmonic distortion.	THD	f_{in}=0~20 kHz, V_{in}=1Vrms	–	0.002	0.005	%
Nois voltage.	V_{NO}	f=20~50 kHz	–	2	10	μVrms

6. BLOCK DIAGRAM

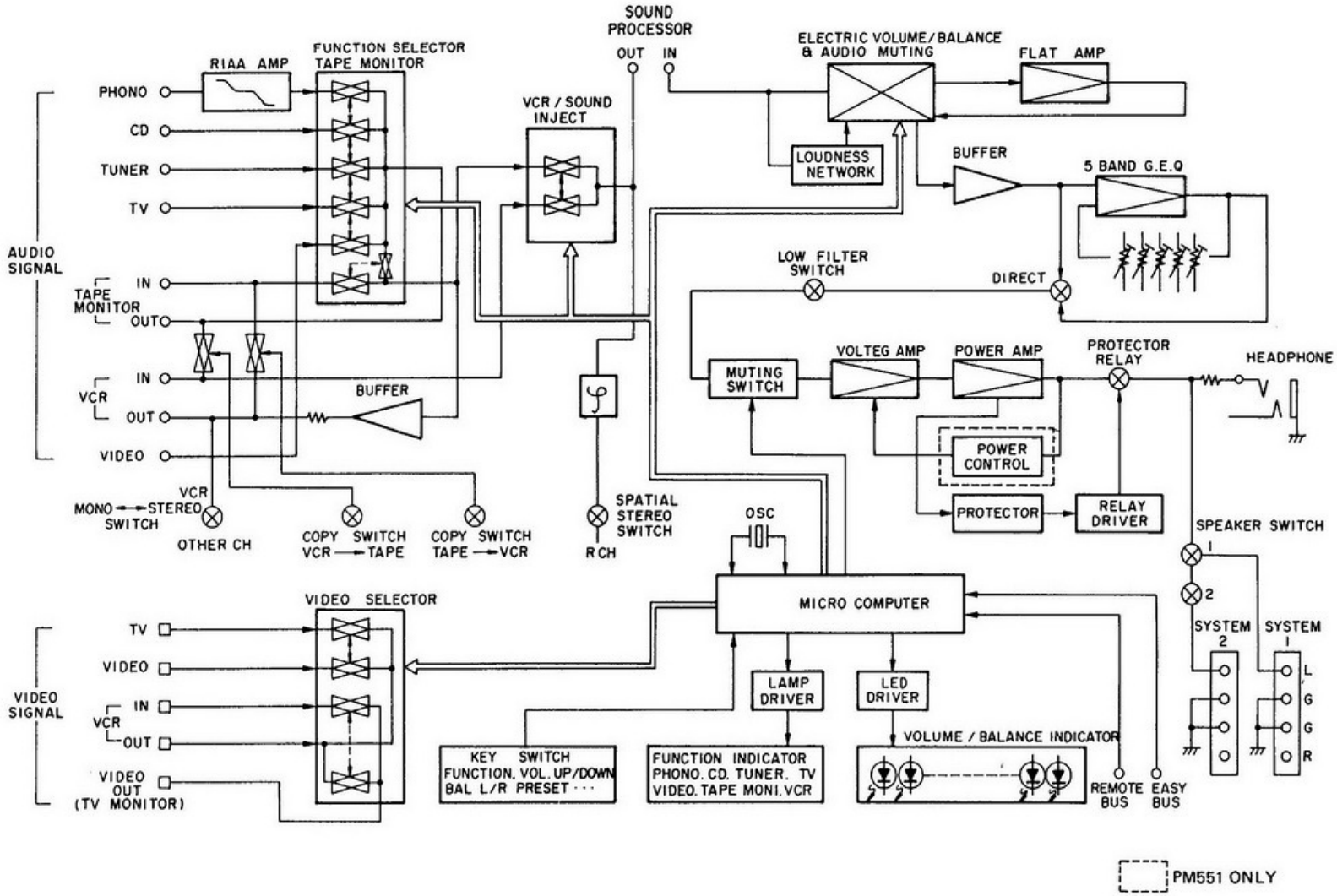

7. DIAGRAM AND COMPONENT LOCATIONS

7.1 Graphic Equalizer Assembly (PF00) Schematic Diagram and Component Locations

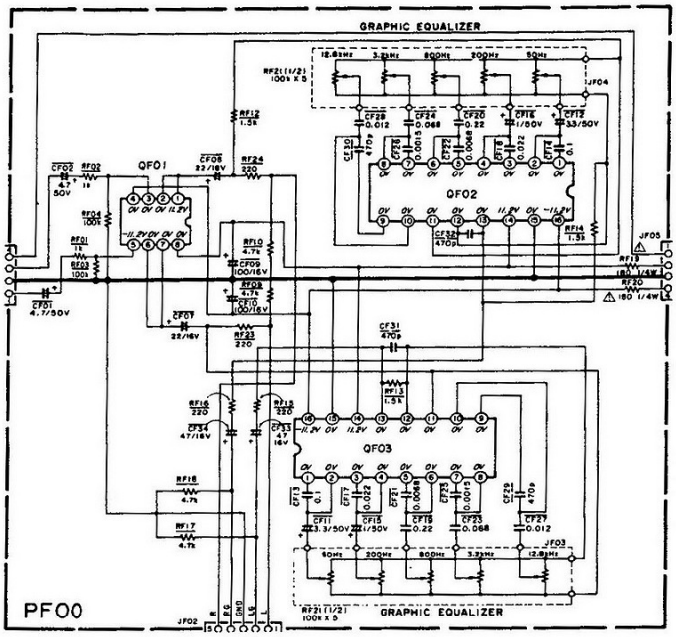

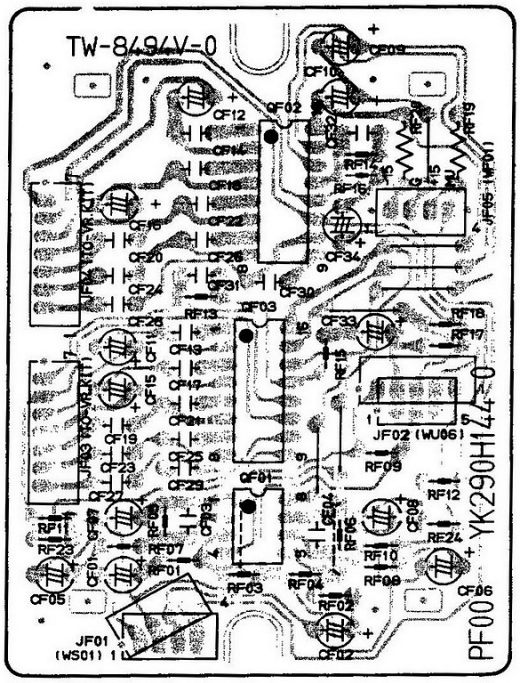

7.2 Visual Selecter Assembly (PL00) Schematic Diagram and Component Locations

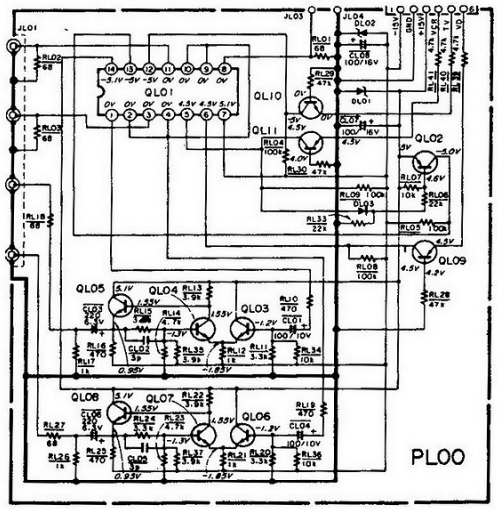

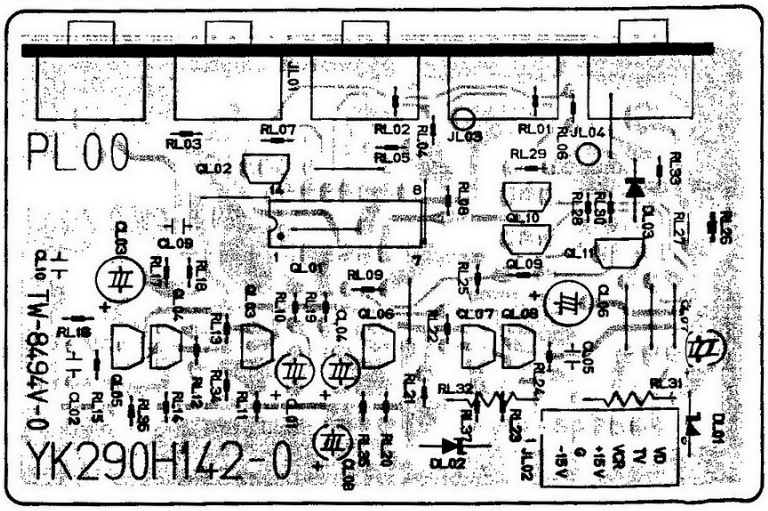

7.3 Input Selecter Assembly (PS00) Schematic Diagram and Component Locations

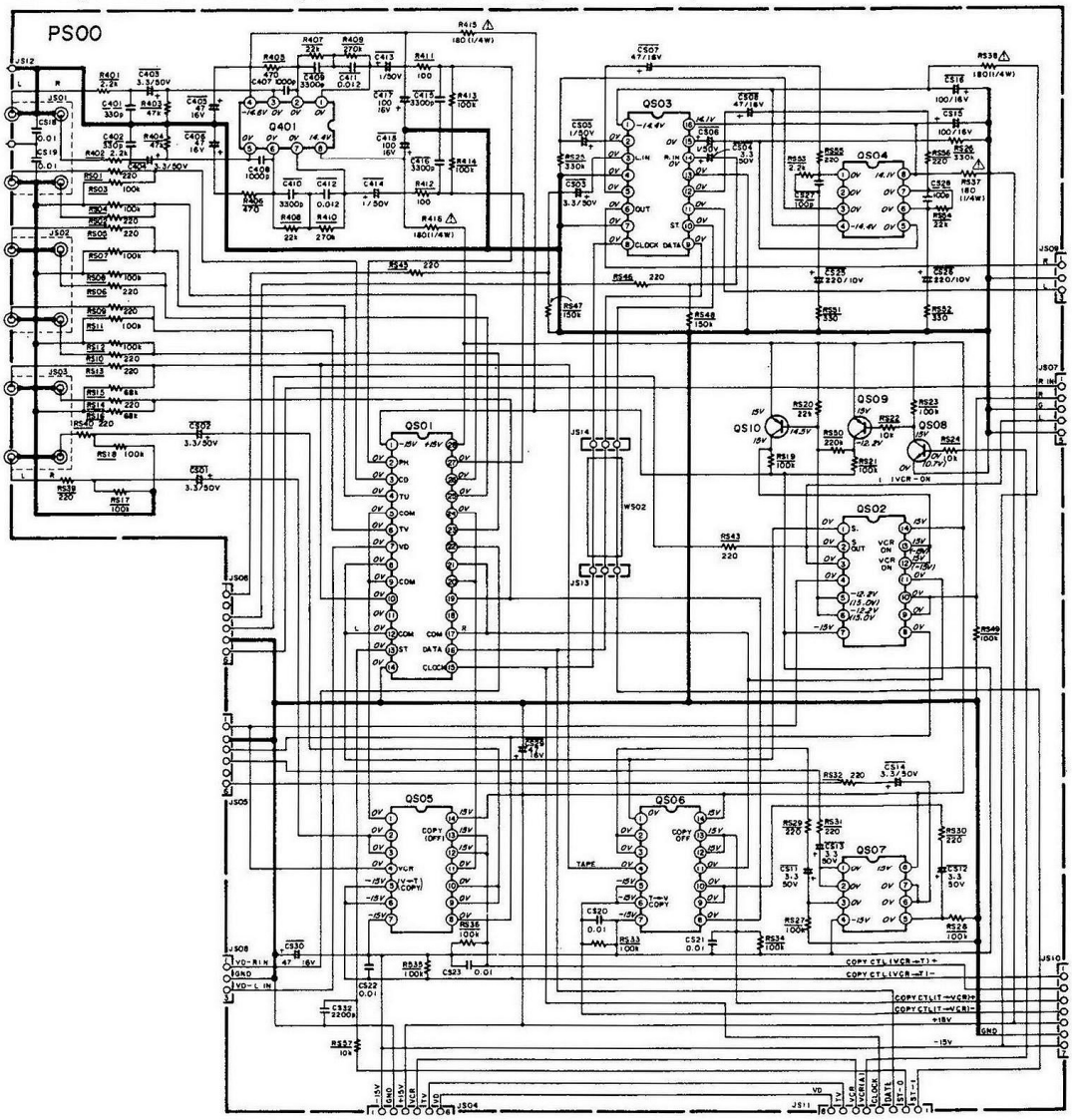

7.4 VD Input Assembly (PV00) Schematic Diagram and Component Locations

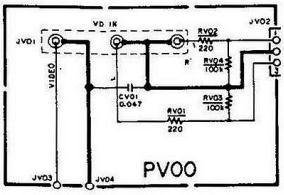

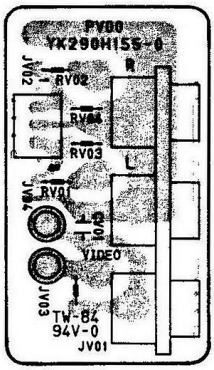

7.5 VCR EASY Remote Input Assembly (PW00) Schematic Diagram and Component Locations

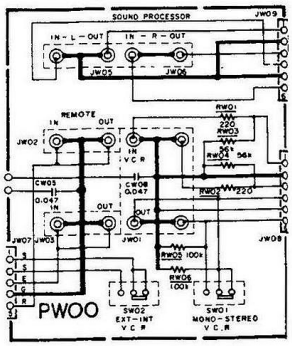

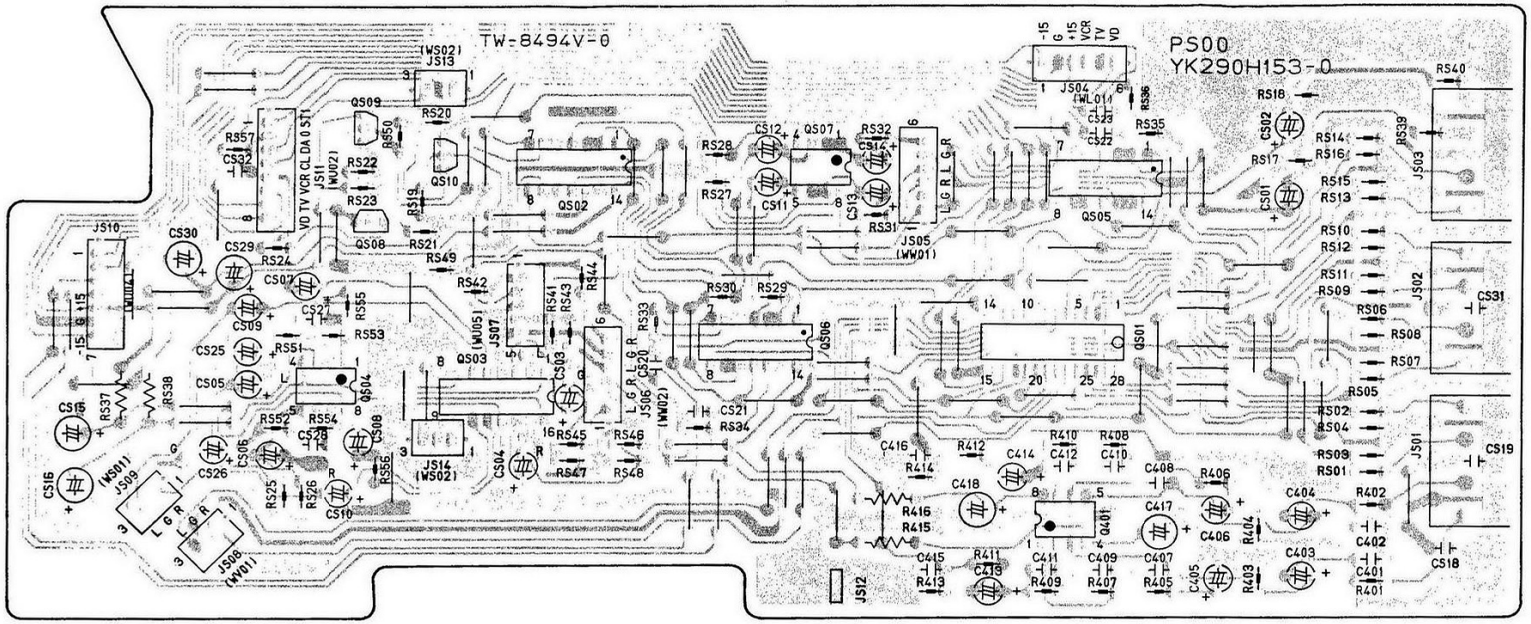
TW-8494V-0
PS00
YK290H153-0

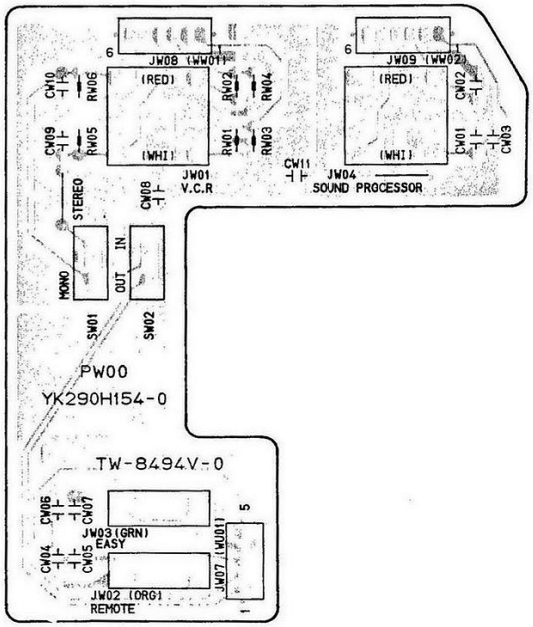
JW08 (WW01)
(RED)
(WHI)
JW01
V.C.R
JW09 (WW02)
JW04
SOUND PROCESSOR
STEREO
MONO
OUT
IN
SW01
SW02
PW00
YK290H154-0
TW-8494V-0
JW03 (GRN)
EASY
JW02 (ORG)
REMOTE

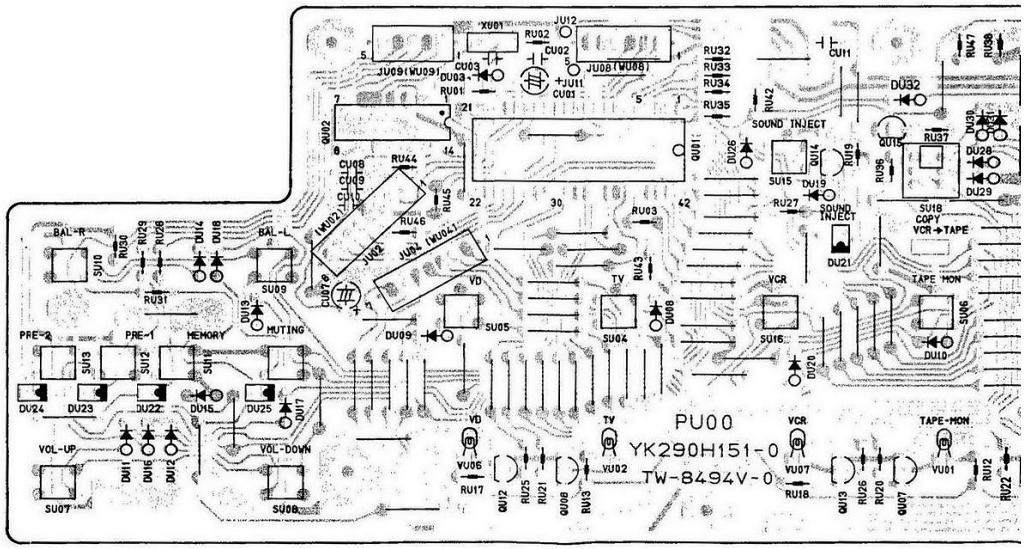
BAL-R
BAL-L
PRE-2
PRE-1
MEMORY
MUTING
VOL-UP
VOL-DOWN
SOUND INJECT
COPY
VCR→TAPE
TAPE MON
VCR
TV
VD
PU00
YK290H151-0
TW-8494V-0

7.6 Front Switch Assembly (PU00) Schematic Diagram and Component Locations

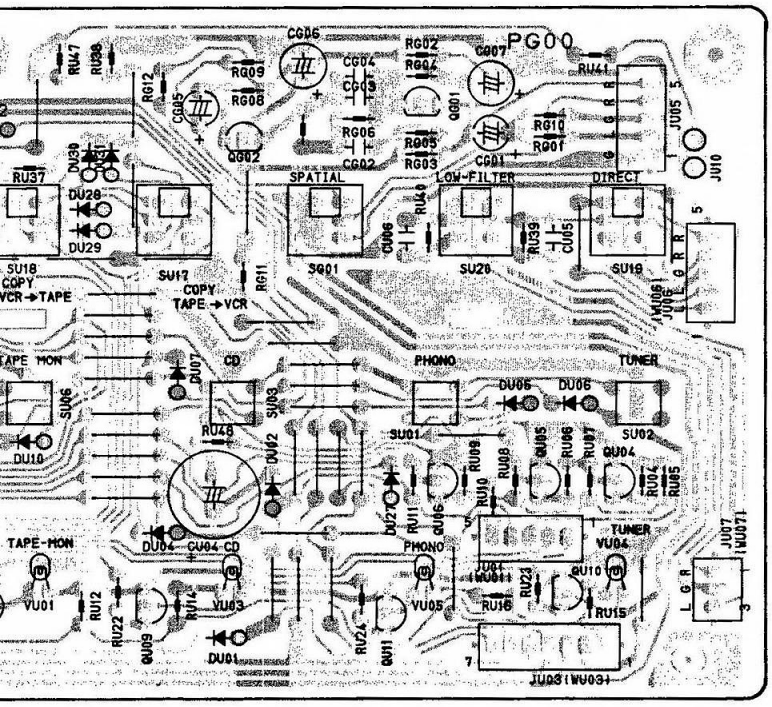

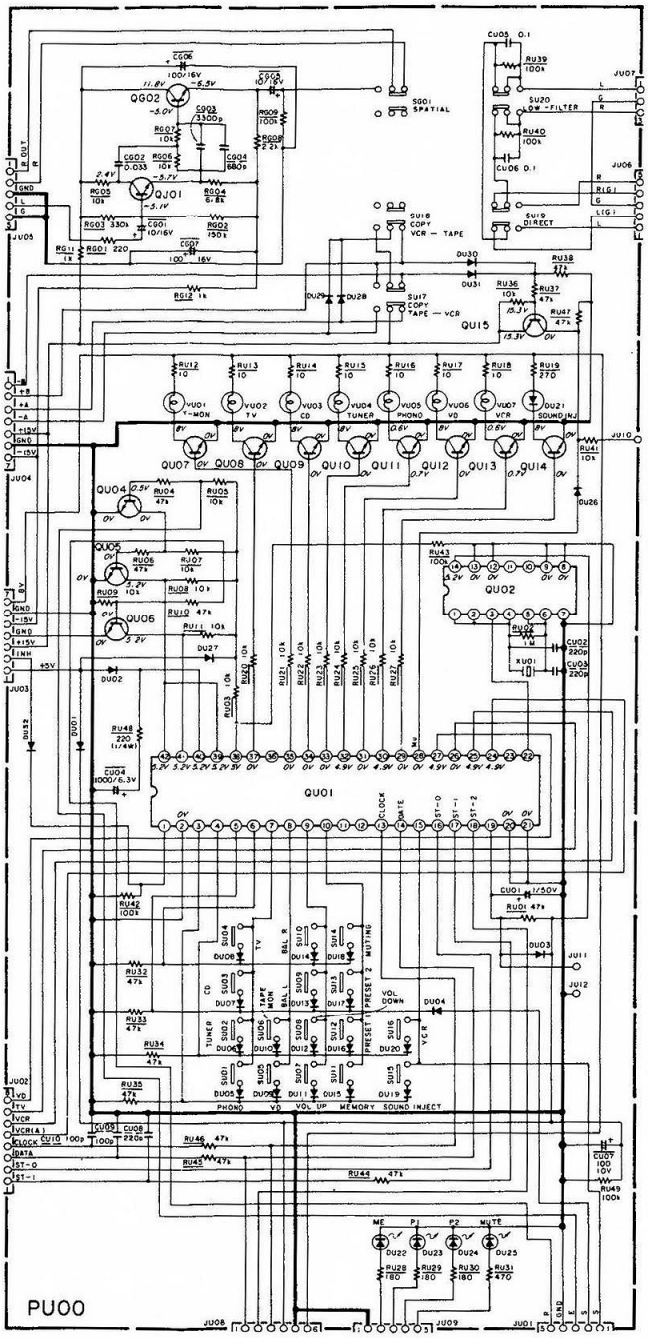

7.7 Main Amp. Assembly (P700) Schematic Diagram and Component Locations

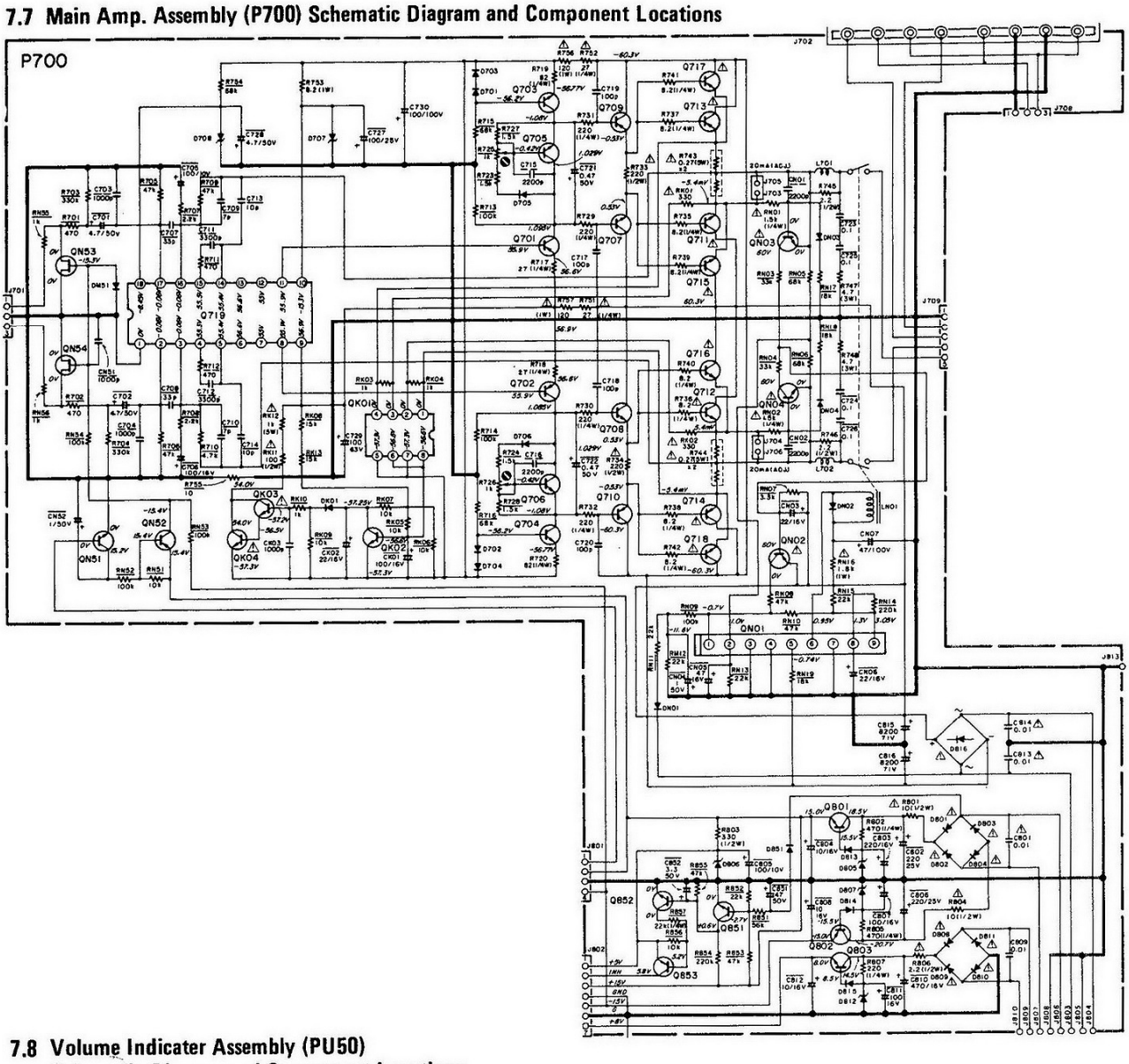

7.8 Volume Indicater Assembly (PU50) Schematic Diagram and Component Locations

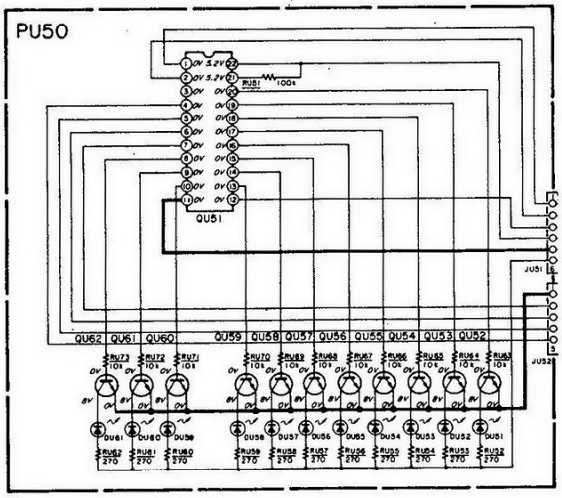

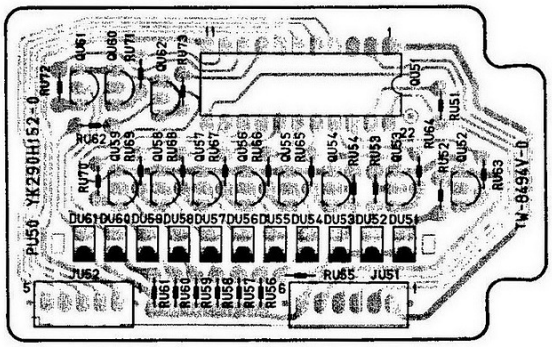

7.9 Speaker Switch Assembly (PT00) Schematic Diagram and Component Locations

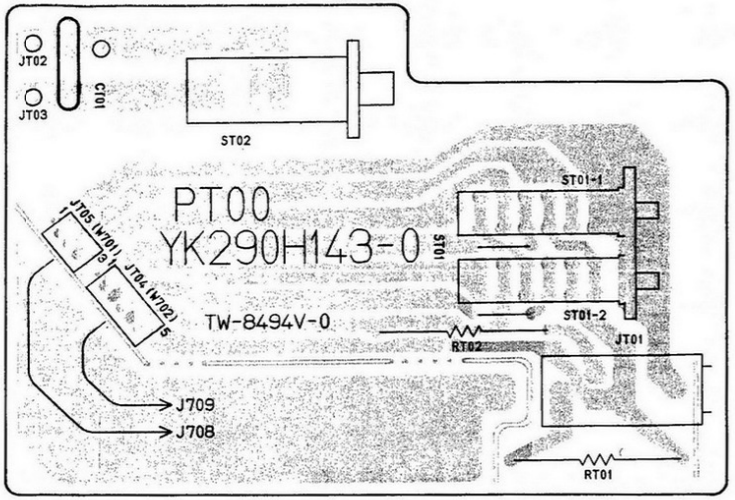

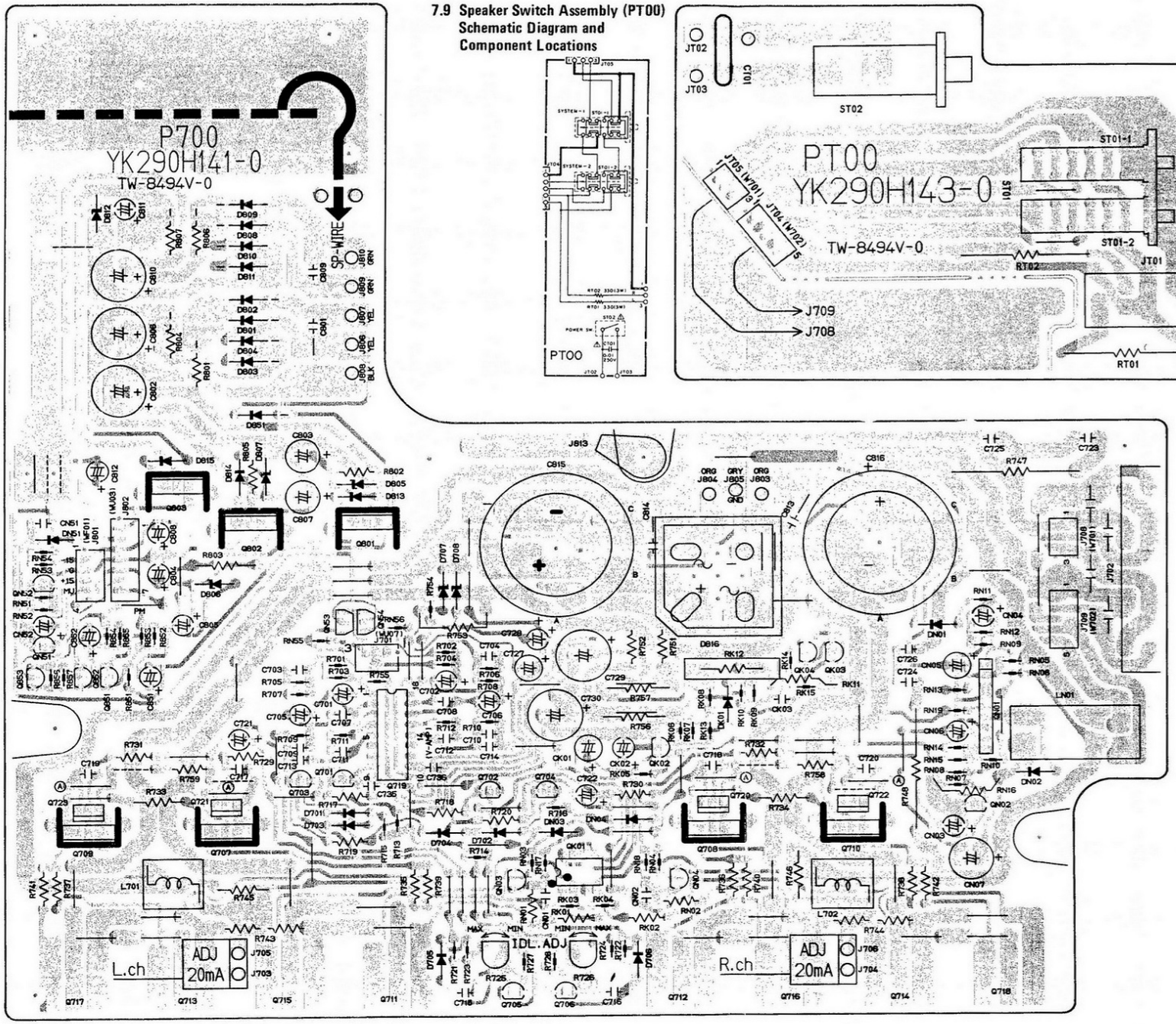

8. EXPLODED VIEW AND PARTS LIST

[C01-99] FRONT PANEL

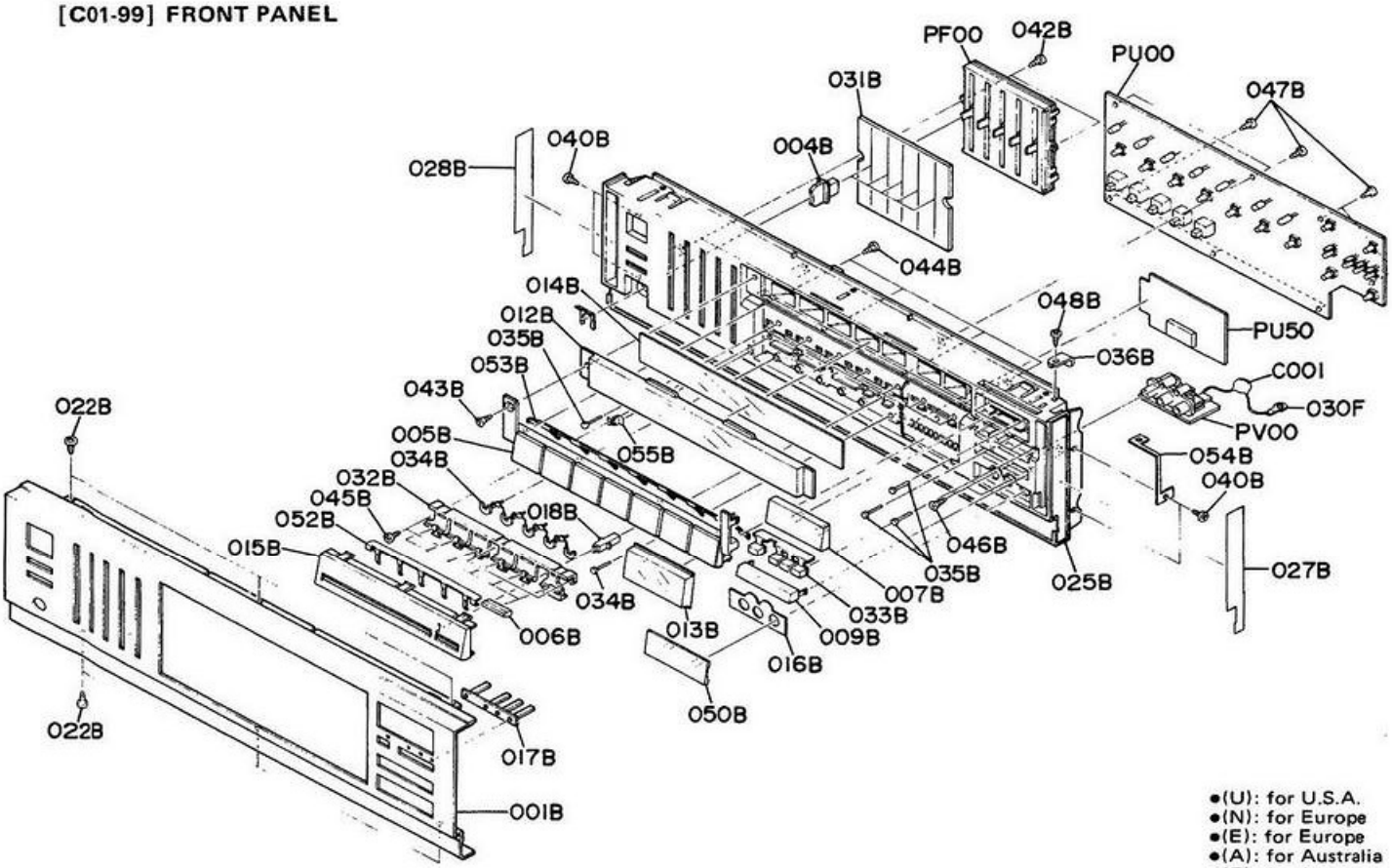

- (U): for U.S.A.
- (N): for Europe
- (E): for Europe
- (A): for Australia
- (F): for Japan

REF. DESIG.	PART NO.	DESCRIPTION
001B	290H248010	Front Panel, Gold (PM551) [U,N,E,A]
	290H248020	Front Panel, Black (PM551) [U,N,E,A,F]
	289H248010	Front Panel, Gold (PM451) [N,E,A]
	289H248020	Front Panel, Black (PM451) [N,E,A,F]
004B	289H154010	Knob, Equalizer; Gold
	289H154210	Knob, Equalizer; Black
005B	289H270030	Button, Function K; Gold
	289H270130	Button, Function K; Black
006B	289H270020	Button, Push; Gold
	289H270120	Button, Push; Black
007B	471H270340	Button, Volume; Gold
	471H270640	Button, Volume; Black
008B	289H270010	Button, Push; Gold
	289H270110	Button, Push; Black
009B	289H154020	Knob, Balance; Gold
	289H154220	Knob, Balance; Black
012B	289H158010	Window, Function
013B	289H158020	Window, Volume Level; Gold
	290H158010	Window, Volume Level; Black
014B	289H265010	Indicator, Function; Gold
	290H265010	Indicator, Function; Black
015B	289H063010	Escutcheon, Copy; Gold
	289H063110	Escutcheon, Copy; Black
016B	289H063020	Escutcheon, 3P Jack; Gold
	289H063120	Escutcheon, 3P Jack; Black
017B	289H355010	Lens, Tuning/Memo

REF. DESIG.	PART NO.	DESCRIPTION
018B	289H355020	Lens, Sound Inject
022B	51280308B0	B.H. Tapped Screw B3 x 8
025B	289H105500	Chassis, Front K; Gold
	289H105010	Chassis, Front; Black
027B	289H063030	Escutcheon, (R)
028B	289H063040	Escutcheon, (L)
031B	289H303010	Mask, Equalizer Knob
032B	289H271010	Holder, Copy Button
033B	289H271020	Holder, Memo Button
034B	289H254020	Pin, Push Switch
035B	289H254010	Pin, Switch
036B	289H104020	Retainer, Front PWB
040B	51280308B0	B.H. Tapped Screw B3 x 8
042B	51280308B0	B.H. Tapped Screw B3 x 8
043B	51280308B0	B.H. Tapped Screw B3 x 8
044B	51280308B0	B.H. Tapped Screw B3 x 8
045B	51280308B0	B.H. Tapped Screw B3 x 8
046B	51280308B0	B.H. Tapped Screw B3 x 8
047B	51280308B0	B.H. Tapped Screw B3 x 8
048B	51280308B0	B.H. Tapped Screw B3 x 8
050B	288H053010	Cover, 3P Jack
052B	289H115010	Spring
053B	289H123010	Contactor
054B	289H123020	Contactor
055B	289H123030	Contactor
030F	62041760W0	Lug
C001	DK18473310	Ceramic Cap. 0.047μF +80% −20%

[C02-99] LID (TOP/BOTTOM COVER)

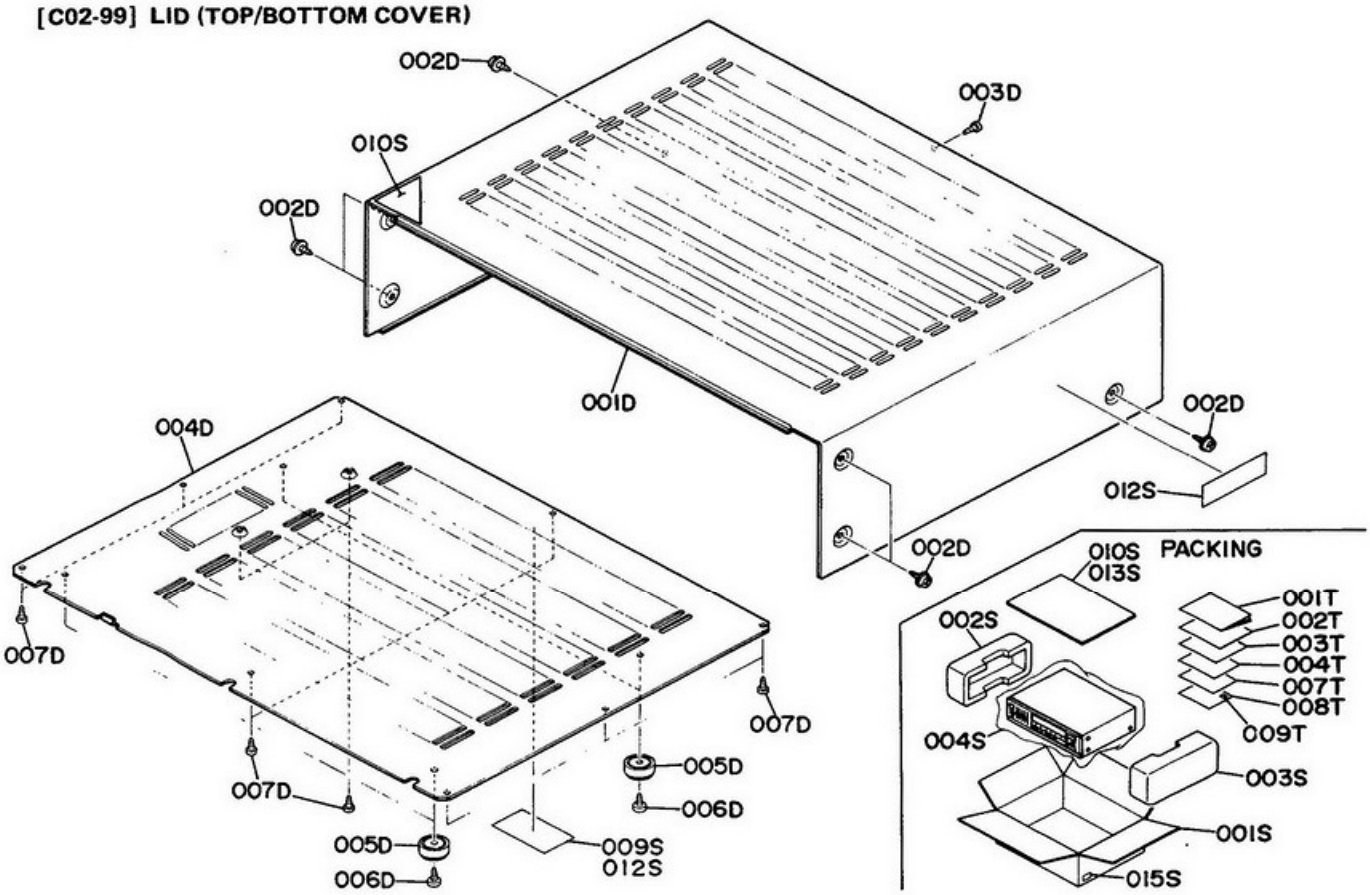

REF. DESIG.	PART NO.	DESCRIPTION	
001D	289H257010	Lid, Top Cover; Gold	
	289H257020	Lid, Top Cover; Black	
002D	51260408U0	B.T. Screw	B4 x 8
003D	51280308E0	B.H. Tapped Screw	B3 x 8, Gold
	51280308U0	B.H. Tapped Screw	B3 x 8, Black
004D	289H257030	Lid, Bottom Cover	
005D	011T057010	Leg	
006D	51280408B0	B.H. Tapped Screw	B4 x 8
007D	51280308B0	B.H. Tapped Screw	B3 x 8
009S	2911861110	Label, Caution [N,E,A]	
010S	105H861010	Label, 3 Year [U]	
012S	117H861010	Label, Caution [U]	
		PACKING	
001S	290H801020	Packing Case (PM551), [U]	
	290H801010	Packing Case (PM551), [N,A,F]	
	290H801040	Packing Case (PM551), [E]	
	289H801010	Packing Case (PM451), [N,A,F]	
	289H801020	Packing Case (PM451), [E]	
002S	289H809010	Cushion, Left	
003S	289H809020	Cushion, Right	
004S	9014336220	Polyethylene Bag	

REF. DESIG.	PART NO.	DESCRIPTION
010S	289H807010	Reinforcing (PM451), [E]
013S	289H807010	Reinforcing (PM551), [E]
015S	9526019010	Serial No. Card [U]
	9526019060	Serial No. Card [N]
	9526019050	Serial No. Card [E]
	9526019030	Serial No. Card [A]
	9526019040	Serial No. Card [F]
001T	290H851210	User Manual [U]
	290H851310	User Manual [N,E,A]
	290H851110	User Manual [F]
002T	290H851210	User Manual, Spec [U]
	290H851320	User Manual, Spec [N,E,A]
003T	290H856010	Circuit Diagram (PM551), [N,E]
	289H856010	Circuit Diagram (PM451), [N,E]
004T	103H854010	Warranty Card [U]
	9631000090	Warranty Card [E]
	9631000130	Warranty Card [F]
007T	128T854010	Warranty Card [F]
008T	9611000050	User's Card [F]
009T	9540000010	License [F]

[C03-99] REAR PANEL

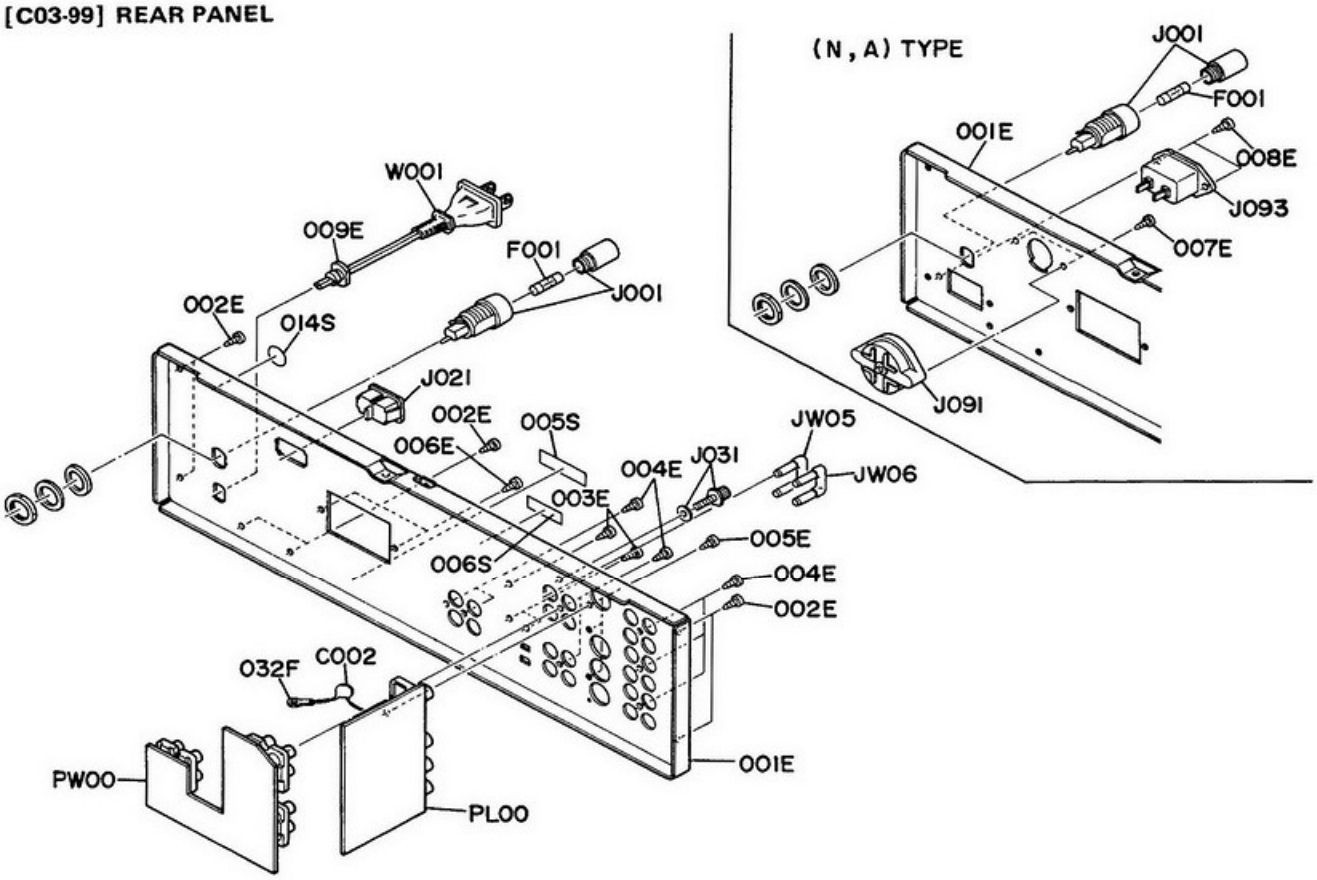

REF. DESIG.	PART NO.	DESCRIPTION
001E	290H250030	Rear Panel (PM551), [U]
	290H250010	Rear Panel (PM551), [N,A]
	290H250020	Rear Panel (PM551), [E]
	290H250040	Rear Panel (PM551), [F]
	289H250010	Rear Panel (PM451), [N,A]
	289H250020	Rear Panel (PM451), [E]
	289H250030	Rear Panel (PM451), [F]
002E	51280308B0	B.H. Tapped Screw B3 x 8
003E	51280308B0	B.H. Tapped Screw B3 x 8
004E	51280308B0	B.H. Tapped Screw B3 x 8
005E	51280308B0	B.H. Tapped Screw B3 x 8
006E	51280308B0	B.H. Tapped Screw B3 x 8
007E	51280308B0	B.H. Tapped Screw B3 x 8 [N,E,A]
008E	51280308B0	B.H. Tapped Screw B3 x 8 [N,A]
009E	1455259130	Bushing, AC Power Cord [U,E,F]
032F	62041760W0	Lug
005S	2112265010	Indicator, Serial No. [U]
	2112265110	Indicator, Serial No. [N,E,A,F]
006S	4581861010	Label, Made in Japan [N,E,A]
014S	9511101070	Label, UL [U]

REF. DESIG.	PART NO.	DESCRIPTION
⚠F001	FS10600500	Fuse 6A 250V (PM551), [U]
	FS10250800	Fuse 2.5A 250V (PM551), [N,E,A]
	FS10600600	Fuse 6A 250V (PM551), [F]
	FS10140800	Fuse 1.4A 250V (PM451), [N,E,A]
⚠J001	YJ08000300	Jack, Fuse Holder [U,F]
	YJ08000290	Jack, Fuse Holder [N,E,A]
⚠J021	YJ04001180	Jack, AC Outlet [U,E,F]
J031	YL03010250	Terminal, GND
⚠J091	BY05030040	Voltage Selector [N,A]
	BY05030050	Voltage Selector [E]
⚠J093	YP04000610	Plug, AC Inlet [N,A]
JW05	YQ01000080	Shote Plug
JW06	YQ01000080	Shote Plug
⚠W001	YC01900100	A.C. Power Cord [U]
	YC01900080	A.C. Power Cord [E,F]
C002	DK18473310	Ceramic Cap. 0.047μF +80% −20%

[C04-99] FRONT CHASSIS AND GENERAL PARTS

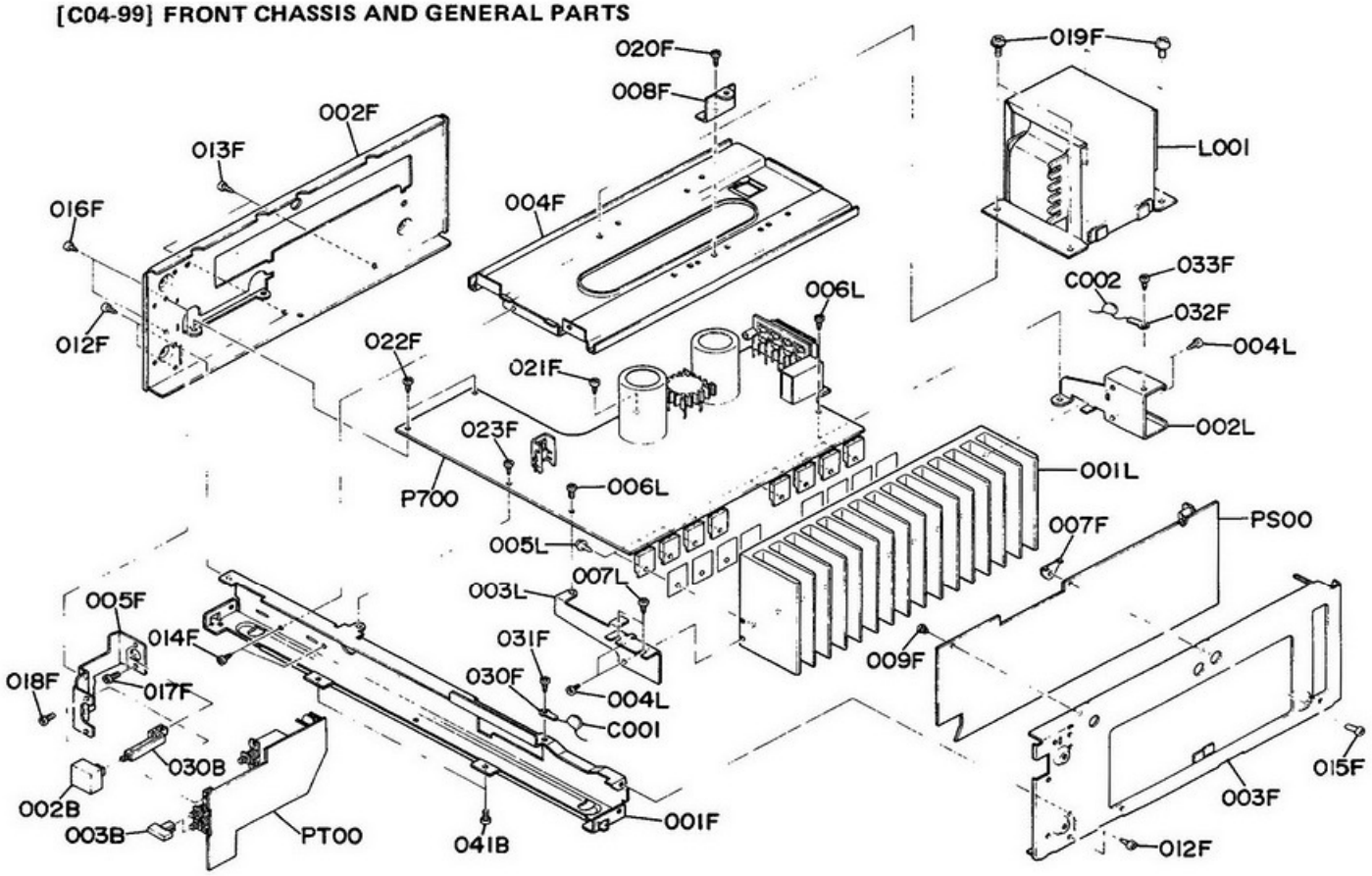

REF. DESIG.	PART NO.	DESCRIPTION
002B	158T270010	Button, Power Switch; Gold
	158T270110	Button, Power Switch; Black
003B	280H270010	Button, Speaker Switch; Gold
	280H270030	Button, Speaker Switch; Black
030B	289H121010	Link, Power Switch
041B	51280308B0	B.H. Tapped Screw B3 x 8
001F	289H126010	Stay, Front
002F	289H105020	Chassis, Side; (L)
003F	289H105030	Chassis, Side; (R)
004F	289H160010	Bracket, Power Transformer
005F	289H104010	Retainer, Power Switch
007F	270H011010	Nut, GND
008F	284H104020	Retainer, Main PWB
009F	2276005050	Clamper
012F	51280308B0	B.H. Tapped Screw B3 x 8
013F	51280308B0	B.H. Tapped Screw B3 x 8
014F	51280308B0	B.H. Tapped Screw B3 x 8
015F	51100308A0	B.H.M. Screw B3 x 8
016F	51280308B0	B.H. Tapped Screw B3 x 8
017F	51100308A0	B.H.M. Screw B3 x 8
018F	51100308A0	B.H.M. Screw B3 x 8
019F	52040408A0	H. Head Bolt, S.F H4 x 8
020F	51500308B0	F.H. Taptite Screw F3 x 8
021F	51280308B0	B.H. Tapped Screw B3 x 8
022F	51280308B0	B.H. Tapped Screw B3 x 8
023F	51280308B0	B.H. Tapped Screw B3 x 8

REF. DESIG.	PART NO.	DESCRIPTION
030F	62041760W0	Lug
031F	51280308B0	B.H. Tapped Screw B3 x 8
032F	62041760W0	Lug
033F	51280308B0	B.H. Tapped Screw B3 x 8
001L	290H267010	Heatsink, Main (PM551)
	289H267010	Heatsink, Main (PM451)
002L	284H104010	Retainer, Rear
003L	284H104020	Retainer, Front
004L	51280308B0	B.H. Tapped Screw B3 x 8
005L	51780312B0	Fin Neck B.T Screw B3 x 12
006L	51100308A0	B.H.M. Screw B3 x 8
007L	51280308B0	B.H. Tapped Screw B3 x 8
⚠L001	TS19624020	Power Transformer (PM551), [U]
	TS19624030	Power Transformer (PM551), [N,A]
	TS19624040	Power Transformer (PM551), [E]
	TS19624010	Power Transformer (PM551), [F]
	TS17631010	Power Transformer (PM451), [N,A]
	TS17631030	Power Transformer (PM451), [E]
C001	DK18473310	Ceramic Cap. 0.047μF +80% −20%
C002	DK18473310	Ceramic Cap. 0.047μF +80% −20%

ASSIGNMENT OF COMMON PARTS CODES.

RESISTOR

R***: (1) GD05 --- 140, Carbon film fixed resistor, ±5%, 1/4W
R***: (2) GD05 --- 160, Carbon film fixed resistor, ±5%, 1/6W

① — Resistance value

Examples

① Resistance value

0.1Ω...001	10Ω...100	1kΩ...102	100kΩ...104
0.5Ω...005	18Ω...180	2.7kΩ...272	680kΩ...684
1Ω...010	100Ω...101	10kΩ...103	1MkΩ...105
6.8Ω...068	390Ω...391	22kΩ...223	4.7MkΩ...475

(Note) Please distinguish 1/4W from 1/6W by the shape of parts used actually.

C***: CERAMIC CAP.

(1) DD1 --- 370, Ceramic condenser
Disc type
Temp. coeff. P350 ~ N1000, 50V

①② — Capacity value
Tolerance

Examples

① Tolerance (Capacity deviation)
±0.25pF...0
±0.5pF...1
±5%...5

* Tolerance of COMMON PARTS handled here are as follows:
0.5pF ~ 5pF...±0.25pF
6pF ~ 10pF...±0.5pF
12pF ~ 560pF...±5%

② Capacity value

0.5pF...005	3pF...030	100pF...101
1pF...010	10pF...100	220pF...221
1.5pF...015	47pF...470	560pF...561

C***: CERAMIC CAP.

(1) DK16 --- 300, High dielectric constant ceramic condenser
Disc type
Temp. chara. 2B4, 50V

① — Capacity value

Example

② Capacity value

100pF...101	1000pF...102	10000pF...103
470pF...471	2200pF...222	

C***: ELECTROLY CAP. (⧺), FILM CAP. (⧺)

(1) EA ------ 10, Electrolytic condenser
One-way lead type, Tolerance ±20%

①② — Dielectric strength
Capacity value

Examples

① Capacity value

0.1μF...104	4.7μF...475	100μF...107
0.33μF...334	10μF...106	330μF...337
1μF...105	22μF...226	1100μF...108
		2200μF...228

② Working voltage

6.3V...006	25V...025
10V...010	35V...035
16V...016	50V...050

(2) DF15 --- 350, Plastic film condenser
One-way type, Mylar ±5% 50V

① — Capacity value

Examples

① Capacity value

0.001μF (1000pF)...102	0.1μF...104
0.0018μF.....182	0.56μF...564
0.01μF.....103	1μF...105
0.015μF.....153	

9. ELECTRICAL PARTS LIST

- (U): for U.S.A.
- (N): for Europe
- (E): for Europe
- (A): for Australia
- (F): for Japan

REF. DESIG.	PART NO.	DESCRIPTION
		P700-MAIN AMP CIRCUIT BORAD
P700	YK290H1410	P.W. Board, Main Amp
	ZZ290H1410	P.W. Board Assembly (PM551)
	ZZ289H8410	P.W. Board Assembly (PM451)
		P700-CAPACITORS
CK03	DK18102310	Ceramic 1000pF 50V (PM551)
CN07	EA47606310	Elect 47μF 63V
C717	DD15101560	Ceramic 100pF ±5% 500V
C718	DD15101560	Ceramic 100pF ±5% 500V
C719	DD15101560	Ceramic 100pF ±5% 500V
C720	DD15101560	Ceramic 100pF ±5% 500V
C729	EA10710010	Elect 100μF 100V (PM551)
	EA10706310	Elect 100μF 63V (PM451)
C730	EA10710010	Elect 100μF 100V (PM551)
	EA10706310	Elect 100μF 63V (PM451)
C801	DK18103560	Ceramic 0.01μF +80% −20% 500V
C809	DK18103310	Ceramic 0.01μF +80% −20% 50V
⚠ C813	DK18103560	Ceramic 0.01μF +80% −20% 500V
⚠ C814	DK18103560	Ceramic 0.01μF +80% −20% 500V
C815	EB82807110	Elect 8200μF 71V (PM551)
	EB68806320	Elect 6800μF 63V (PM451)
C816	EB82807110	Elect 8200μF 71V (PM551)
	EB68806320	Elect 6800μF 63V (PM451)
		P700-RESISTORS
⚠ RK01	NH05331140	330Ω ±5% ¼W, Fusible (PM551)
⚠ RK02	NH05331140	330Ω ±5% ¼W, Fusible (PM551)
⚠ RK11	GG05101120	100Ω ±5% ½W (PM551)
⚠ RK12	GP05102750	1KΩ ±5% 5W (PM551)
⚠ RN01	NF02152140	1.5KΩ ±2% ¼W, Fuse (PM551)
	NH05681140	680Ω ±5% ¼W, Fusible (PM451)
⚠ RN02	NF02152140	1.5KΩ ±2% ¼W, Fuse (PM551)
	NF05681140	680Ω ±5% ¼W, Fusible (PM451)
⚠ RN16	GA05182010	1.8KΩ ±5% 1W
R717	GG05470140	47Ω ±5% ¼W
R718	GG05470140	47Ω ±5% ¼W
R719	GG05820140	82Ω ±5% ¼W
R720	GG05820140	82Ω ±5% ¼W
R725	RA01020600	1KΩ(B), Trimming; Idle Current
R726	RA01020600	1KΩ(B), Trimming; Idle Current
R729	GG05221140	220Ω ±5% ¼W
R730	GG05221140	220Ω ±5% ¼W
R731	GG05221140	220Ω ±5% ¼W
R732	GG05221140	220Ω ±5% ¼W
⚠ R733	NH05221120	220Ω ±5% ½W, Fusible
⚠ R734	NH05221120	220Ω ±5% ½W, Fusible
R735 ~ R738	GG05068140	6.8Ω ±5% ¼W
R739	GG05082140	8.2Ω ±5% ¼W (PM551)
R740	GG05082140	8.2Ω ±5% ¼W (PM551)
R741	GG05082140	8.2Ω ±5% ¼W (PM551)
R742	GG05082140	8.2Ω ±5% ¼W (PM551)
⚠ R743	BW10000030	0.27Ω×2 ±10% 5W, Composite(PM551)
	BW10000040	0.27Ω×2 ±10% 3W, Composite(PM451)
⚠ R744	BW10000030	0.27Ω×2 ±10% 5W, Composite(PM551)
	BW10000040	0.27Ω×2 ±10% 5W, Composite(PM451)
R745	GG05022120	2.2Ω ±5% ½W
R746	GG05022120	2.2Ω ±5% ½W
R747	GA05047030	4.7Ω ±5% 3W

REF. DESIG.	PART NO.	DESCRIPTION
R748	GA05047030	4.7Ω ±5% 3W
⚠R751	NH05270140	27Ω ±5% ¼W, Fusible (PM551)
	NH05101140	100Ω ±5% ¼W, Fusible (PM451)
⚠R752	NH05270140	27Ω ±5% ¼W, Fusible (PM551)
	NH05101140	100Ω ±5% ¼W, Fusible (PM451)
R753	GA05822010	8.2KΩ ±5% 1W
⚠R756	GA05121010	120Ω ±5% 1W (PM551)
⚠R757	GA05121010	120Ω ±5% 1W (PM551)
⚠R801	NH05100120	10Ω ±5% ½W, Fusible
R802	GG05471140	470Ω ±5% ¼W
R803	GA05151010	150Ω ±5% 1W
⚠R804	NH05100120	10Ω ±5% ½W, Fusible
R805	GG05471140	470Ω ±5% ¼W
⚠R806	NH05022120	2.2Ω ±5% ½W, Fusible
R807	GG05221140	220Ω ±5% ¼W
		P700-SEMICONDUCTORS
DK01	HD20001000	Diode 1S2473 or 1S1555 etc. (PM551)
DN01	HD20022030	Diode DSF10C
DN02	HD20022030	Diode DSF10C
DN03	HD20003210	Diode 1S2471
DN04	HD20003210	Diode 1S2471
DN51	HD20001000	Diode 1S2473 or 1S1555 etc.
D701 ~ D706	HD20001000	Diode 1S2473 or 1S1555 etc.
D707	HD30012020	Zener MA1150M
D708	HD30024020	Zener MA1082M
⚠D801	HD20015030	Diode DS135D
⚠D802	HD20015030	Diode DS135D
⚠D803	HD20015030	Diode DS135D
⚠D804	HD20015030	Diode DS135D
D805	HD30020020	Zener MA1160M
D806	HD30005020	Zener MA1056M
D807	HD30020020	Zener MA1160M
⚠D808	HD20015030	Diode DS135D
⚠D809	HD20015030	Diode DS135D
⚠D810	HD20015030	Diode DS135D
⚠D811	HD20015030	Diode DS135D
D812	HD30007020	Zener MA1091M
D813	HD20001000	Diode 1S2473 or 1S1555 etc.
D814	HD20001000	Diode 1S2473 or 1S1555 etc.
D815	HD20001000	Diode 1S2473 or 1S1555 etc.
⚠D816	HE20012290	Diode D5FB20 (PM551)
	HE20009290	Diode S5VB20 (PM451)
D851	HD20015030	Diode DS135D
QK01	HW10004320	Photo Unit PC-827 (PM551)
QK02	HT309452B0	Transistor 2SC945(Q, R) (PM551)
⚠QK03	HT325511B0	Transistor 2SC2551 (PM551)
⚠QK04	HT325511B0	Transistor 2SC2551 (PM551)
QN01	HC10042050	IC TA7317P
⚠QN02	HT109701A0	Transistor 2SA970(GR)
⚠QN03	HT322401A0	Transistor 2SC2240(GR)
⚠QN04	HT322401A0	Transistor 2SC2240(GR)
QN51	HT309452B0	Transistor 2SC945(Q, R)
QN52	HT111752D0	Transistor 2SA1175(EF, FF)
QN53	HF203722A0	F.E.T. 2SK372(GR, BL)
QN54	HF203722A0	F.E.T. 2SK372(GR, BL)

REF. DESIG.	PART NO.	DESCRIPTION
Q701	HT112082A0	Transistor 2SA1208(R, S)
Q702	HT112082A0	Transistor 2SA1208(R, S)
Q703	HT329102A0	Transistor 2SC2910(R, S)
Q704	HT329102A0	Transistor 2SC2910(R, S)
Q705	HT309452B0	Transistor 2SC945(Q, R)
Q706	HT309452B0	Transistor 2SC945(Q, R)
Q707	HT332982D0	Transistor 2SC3298(O, Y)
Q708	HT332982D0	Transistor 2SC3298(O, Y)
Q709	HT113062D0	Transistor 2SA1306(O, Y)
Q710	HT113062D0	Transistor 2SA1306(O, Y)
⚠Q711	HT331822A0	Transistor 2SC3182(R, O)
⚠Q712	HT331822A0	Transistor 2SC3182(R, O)
⚠Q713	HT112652A0	Transistor 2SA1265(R, O)
⚠Q714	HT112652A0	Transistor 2SA1265(R, O)
⚠Q715	HT331822A0	Transistor 2SC3182(R, O) (PM551)
⚠Q716	HT331822A0	Transistor 2SC3182(R, O) (PM551)
⚠Q717	HT112652A0	Transistor 2SA1265(R, O) (PM551)
⚠Q718	HT112652A0	Transistor 2SA1265(R, O) (PM551)
Q719	HC10066020	IC AN7062P
Q801	HT332982D0	Transistor 2SC3298(O, Y)
Q802	HT113062D0	Transistor 2SA1306(O, Y)
Q803	HT332982D0	Transistor 2SC3298(O, Y)
Q851	HT309452B0	Transistor 2SC945(Q, R)
Q852	HT309452B0	Transistor 2SC945(Q, R)
Q853	HT111752D0	Transistor 2SA1175(EF, FF)
		P700-MISCELLANEOUS
J701	YJ06002430	Jack, 3P
J702	YT03080020	Terminal, 8P; Speaker
J801	YJ06002440	Jack, 4P
J802	YJ06002460	Jack, 7P
J813	YL01010110	Terminal, GND
LN01	LY20240190	Relay, Speaker Protector (PM551)
	LY20240260	Relay, Speaker Protector (PM451)
L701	LL23905120	Choke Coil 3.9mH
L702	LL23905120	Choke Coil 3.9mH
		PF00-GRAPHIC EQUALIZER CIRCUIT BOARD
PF00	YK290H1440	P.W. Board, Graphic Equalizer
	ZZ290H1440	P.W. Board Assembly
		PF00-RESISTORS
⚠RF19	GG05181140	180Ω ±5% ¼W
⚠RF20	GG05181140	180Ω ±5% ¼W
RF21	RY01040050	100KΩ(B), Variable; Band GEQ
		PF00-SEMICONDUCTORS
QF01	HC10008090	IC NJM4558DD
QF02	HC10036200	IC M5227P
QF03	HC10036200	IC M5227P
		PF00-MISCELLANEOUS
JF01	YJ06002440	Jack, 4P
JF02	YJ06002390	Jack, 5P
JF03	YJ06002460	Jack, 7P
JF04	YJ06002460	Jack, 7P
WF01	YU04140260	Jumper Lead, 4P

REF. DESIG.	PART NO.	DESCRIPTION
		PL00-VISUAL SELECTOR CIRCUIT BOARD
PL00	YK290H1420	P.W. Board, Visual Selector
	ZZ290H1420	P.W. Board Assembly [U,C,E,F]
	ZZ290H8420	P.W. Board Assembly [N,A]
		PL00-RESISTORS
RL31	NK05221010	220Ω ±5% 1W, Metal
RL32	NK05221010	220Ω ±5% 1W, Metal
		PL00-SEMICONDUCTORS
DL01	HD30004020	Zener MA1051M
DL02	HD30004020	Zener MA1051M
DL03	HD20001000	Diode 1S2473 or 1S155 etc.
QL01	HC406603C0	IC LC4066BH
QL02	HT111752D0	Transistor 2SA1175(FF, EF)
QL03		
	HT327852D0	Transistor 2SC2785(FF, EF)
QL08		
QL09	HT111752D0	Transistor 2SA1175(FF, EF)
QL10	HT111752D0	Transistor 2SA1175(FF, EF)
QL11	HT111752D0	Transistor 2SA1175(FF, EF)
		PL00-MISCELLANEOUS
JL01	YT02040560	Terminal, 4P; Video IN [U,C,E,F]
	YT02040340	Terminal, 4P; Video IN [N,A]
JL02	YJ07001760	Jack, 6P
		PS00-INPUT SELECTOR CIRCUIT BOARD
PS00	YK290H1530	P.W. Board, Input Selector
	ZZ290H1530	P.W. Board Assembly
		PS00-CAPACITORS
CS18	DK18103310	Ceramic 0.01μF +80% −20% 50V
CS19	DK18103310	Ceramic 0.01μF +80% −20% 50V
CS20	DK18103310	Ceramic 0.01μF +80% −20% 50V
CS21	DK18103310	Ceramic 0.01μF +80% −20% 50V
CS22	DK18103310	Ceramic 0.01μF +80% −20% 50V
CS23	DK18103310	Ceramic 0.01μF +80% −20% 50V
C407	DK18102310	Ceramic 1000pF +80% −20% 50V
C408	DK18102310	Ceramic 1000pF +80% −20% 50V
		PS00-RESISTORS
⚠RS37	GG05181140	180Ω ±5% ¼W
⚠RS38	GG05181140	180Ω ±5% ¼W
⚠R415	GG05181140	180Ω ±5% ¼W
⚠R416	GG05181140	180Ω ±5% ¼W
		PS00-SEMICONDUCTORS
QS01	HC10117050	IC TC9163N
QS02	HC10150030	IC LC4966
QS03	HC10118050	IC TC9176P
QS04	HC10008090	IC NJM4558DD
QS05	HC10150030	IC LC4966
QS06	HC10150030	IC LC4966
QS07	HC10008090	IC NJM4558DD
QS08	HT30001000	Transistor 2SC536SP(F, G) etc.
QS09	HT10001000	Transistor 2SA608SP(F, G) etc.
QS10	HT10001000	Transistor 2SA608SP(F, G) etc.
Q401	HC10008090	IC NJM4558DD

REF. DESIG.	PART NO.	DESCRIPTION
		PS00-MISCELLANEOUS
JS01	YT02040610	Terminal, 4P; Phone/CD
JS02	YT02040500	Terminal, 4P; Tuner/TV
JS03	YT02040500	Terminal, 4P, Tape IN/OUT
JS05	YJ06002450	Jack, 6P
JS06	YJ06002450	Jack, 6P
JS07	YJ06002440	Jack, 4P
JS08	YJ06002430	Jack, 3P
JS09	YJ06002430	Jack, 3P
JS10	YJ06002460	Jack, 7P
JS11	YJ06002270	Jack, 8P
JS12	YL01010110	Termial, Earth
WL01	YU06160260	Jumper Lead, 6P
WS02	YU03080260	Jumper Lead, 3P
		PT00-SPEAKER SWITCH CIRCUIT BOARD
PT00	YK290H1430	P.W. Board, Speaker Switch
	ZZ290H1430	P.W. Board Assembly (BLACK)
	ZZ290H2430	P.W. Board Assembly (GOLD)
		PT00-CAPACITOR
⚠CT01	DK18103840	Ceramic 0.01μF 250V
	DK18103850	Ceramic 0.01μF 250V [F]
		PT00-RESISTORS
RT01	GA05331030	330Ω ±5% 3W
RT02	GA05331030	330Ω ±5% 3W
		PT00-MISCELLANEOUS
JT01	YJ01002080	Jack, Phone (Black)
	YJ01001790	Jack, Phone (Grey)
ST01	SP04020480	Push Switch, Speaker
⚠ST02	SP01010960	Push Switch, Power
W701	YU03280240	Jumper Lead, 3P
W702	YU05300240	Jumper Lead, 5P
		PU00-FRONT SWITCH CIRCUIT BOARD
PU00	YK290H1510	P.W. Board, Front Switch
	ZZ290H1510	P.W. Board Assembly
		PU00-CAPACITORS
CG02	DF16333350	Film 0.033μF ±10% 50V
CU01	EJ10505010	Elect 1μF 50V
CU05	DF16104350	Film 0.1μF ±10% 50V
CU06	DF16104350	Film 0.1μF ±10% 50V
		PU00-SEMICONDUCTORS
DU01 ~ DU20	HD20015210	Diode 1SS133
DU21	HI10038030	L.E.D. SLP-281F
DU22	HI10052030	L.E.D. SLP-274B
DU23	HI10052030	L.E.D. SLP-274B
DU24	HI10052030	L.E.D. SLP-274B
DU25	HI10053030	L.E.D. SLP-174B
DU26 ~ DU32	HD20015210	Diode 1SS133

REF. DESIG.	PART NO.	DESCRIPTION
QG01	HT327852D0	Transistor 2SC2785(FF, EF)
QG02	HT327852D0	Transistor 2SC2785(FF, EF)
QU01	HC10169030	IC LM6502C
QU02	HC401100B0	IC 4011
QU04	HT30001000	Transistor 2SC536SP(F, G) etc.
QU05	HT30001000	Transistor 2SC536SP(F, G) etc.
QU06	HT30001000	Transistor 2SC536SP(F, G) etc.
QU07 ~ QU14	HT327852D0	Transistor 2SC2785(FF, EF)
QU15	HT111752D0	Transistor 2SA1175(FF, EF)
		PU00-MISCELLANEOUS
JU05	YJ06002390	Jack, 5P
SG01	SP02011270	Push Switch, SPH
SU01 ~ SU16	SP01011000	Push Switch, KHH
SU17	SP02011270	Push Switch, SPH
SU18	SP02011270	Push Switch, SPH
SU19	SP02011270	Push Switch, SPH
SU20	SP02011270	Push Switch, SPH
VU01 ~ VU07	IN10080650	Lamp 50mA 8V
WU01	YU05400260	Jumper Lead, 5P
WU02	YU08140260	Jumper Lead, 8P
WU03	YU07120260	Jumper Lead, 7P
WU04	YU07140260	Jumper Lead, 7P
WU06	YU05090260	Jumper Lead, 5P
WU07	YU03180260	Jumper Lead, 3P
WU08	YU06080260	Jumper Lead, 6P
WU09	YU05080260	Jumper Lead, 5P
XU01	FQ04003010	Seramic Viblator, CSB-400P
		PU50-VOLUME INDICATOR CIRCUIT BOARD
PU50	YK290H1520	P.W. Board, Volume Indicator
	ZZ290H1520	P.W. Board Assembly
DU51 ~ DU61	HI10038030	L.E.D. SLP-281F, Green
QU51	HC10001260	IC MSM59371RS
QU52 ~ QU62	HT327852D0	Transistor 2SC2785(FF, EF)

REF. DESIG.	PART NO.	DESCRIPTION
		PV00-VD INPUT CIRCUIT BOARD
PV00	YK290H1550	P.W. Board, VD Input
	ZZ290H1550	P.W. Board Assembly
CV01	DK18473310	Ceramic Cap. 0.047μF +80% −20% 50V
JV01	YT02030020	Terminal, 3P
WV01	YU03120260	Jumper Lead, 3P
		PW00-VCR EASY REMOTE INPUT CIRCUIT BOARD
PW00	YK290H1520	P.W. Board, VCR Easy Remote Input
	ZZ290H1520	P.W. Board Assembly
CW05	DK18473310	Ceramic Cap. 0.047μF
CW08	DK18473310	Ceramic Cap. 0.047μF
JW01	YT02040620	Terminal, 4P; VCR IN/OUT
JW02	YT02020340	Terminal, 2P; Remote IN/OUT
JW03	YT02020540	Terminal, 2P; Easy IN/OUT
JW04	YT02040590	Terminal, 4P; Surround IN/OUT
JW05	YQ01000080	Shote Plug
JW06	YQ01000080	Shote Plug
JW07	YJ07001750	Jack, 5P
SW01	SS01020520	Slide Switch, VCR Mono/Stereo
SW02	SS01020520	Slide Switch, Remote IN/OUT
WW01	YU06140260	Jumper Lead, 6P
WW02	YU06180260	Jumper Lead, 6P

(W01-99)	Assembly and Wiring
(T01-99)	Adjustment
(X01-00)	Correction

NOTE ON SAFETY:
Symbol ⚠ Fire or electrical shock hazard. Only original parts should be used to replace any part marked with symbol ⚠. Any other component substitution (other than original type), may increase risk of fire or electrical shock hazard.

10. TECHNICAL SPECIFICATIONS

MODEL PM451

AUDIO SECTION

POWER OUTPUT PER CHANNEL

DIN 4 OHMS	80 W
RMS 4 OHMS	60 W
DIN 8 OHMS	70 W
RMS 8 OHMS	60 W
TOTAL HARMONIC DISTORTION AT RMS 8 OHMS	**0.05%**
I.M. DISTORTION	**0.05%**
DAMPING FACTOR 8 OHMS (1 kHz)	**35**
Frequency Response	10 Hz ~ 25 kHz

MM CARTRIDGE INPUT

Frequency Response (RIAA)	±0.5 dB
Signal to Noise Ratio	80 dB
Input Impedance	47 k ohms
Input Capacitance	330 pF
Input Sensitivity	2.5 mV
Equivalent Input Noise	1.6 μV
Dynamic Range	103 dB

AUX. INPUT

Input Impedance	22 k ohms
Input Sensitivity	150 mV
Frequency Response	10 Hz ~ 25 kHz
Signal to Noise Ratio	93 dB

OUTPUT VOLTAGE

Tape Out	150 mV

OUTPUT IMPEDANCE

Tape Out	550 ohms

GENERAL

Power Requirements	N and T versions	220/240 V AC, 50/60 Hz
	E version	110/120/220/240 V AC, 50/60 Hz
Power Consumption at Rated Output, both Channels Driven		270 W
Dimensions		
Panel Width		420 mm
Panel Height		118 mm
Depth		329 mm
Weight		
Unit Alone		8.3 kg

Specifications and appearance are subject to change for modification without notice.

MODEL PM551

AUDIO SECTION

POWER OUTPUT PER CHANNEL

DIN 4 OHMS	115 W
RMS 4 OHMS	100 W
DIN 8 OHMS	110 W
RMS 8 OHMS	100 W
TOTAL HARMONIC DISTORTION AT RMS 8 OHMS	0.05%
I.M. DISTORTION	0.05%
DAMPING FACTOR 8 OHMS (1 kHz)	35
Frequency Response	10 Hz ~ 25 kHz

MM CARTRIDGE INPUT

Frequency Response (RIAA)	±0.5 dB
Signal to Noise Ratio	80 dB
Input Impedance	47 k ohms
Input Capacitance	330 pF
Input Sensitivity	2.5 mV
Equivalent Input Noise	1.6 μV
Dynamic Range	103 dB

AUX. INPUT

Input Impedance	22 k ohms
Input Sensitivity	150 mV
Frequency Response	10 Hz ~ 25 kHz
Signal to Noise Ratio	95 dB

OUTPUT VOLTAGE

Tape Out	150 mV

OUTPUT IMPEDANCE

Tape Out	550 ohms

GENERAL

Power Requirements	N and T versions	220/240 V AC, 50/60 Hz
	E version	110/120/220/240 V AC, 50/60 Hz
Power Consumption at Rated Output, both Channels Driven		380 W
Dimensions		
Panel Width		420 mm
Panel Height		118 mm
Depth		329 mm
Weight		
Unit Alone		10.4 kg

Specifications and appearance are subject to change for modification without notice.

11. SCHEMATIC DIAGRAM

PM451

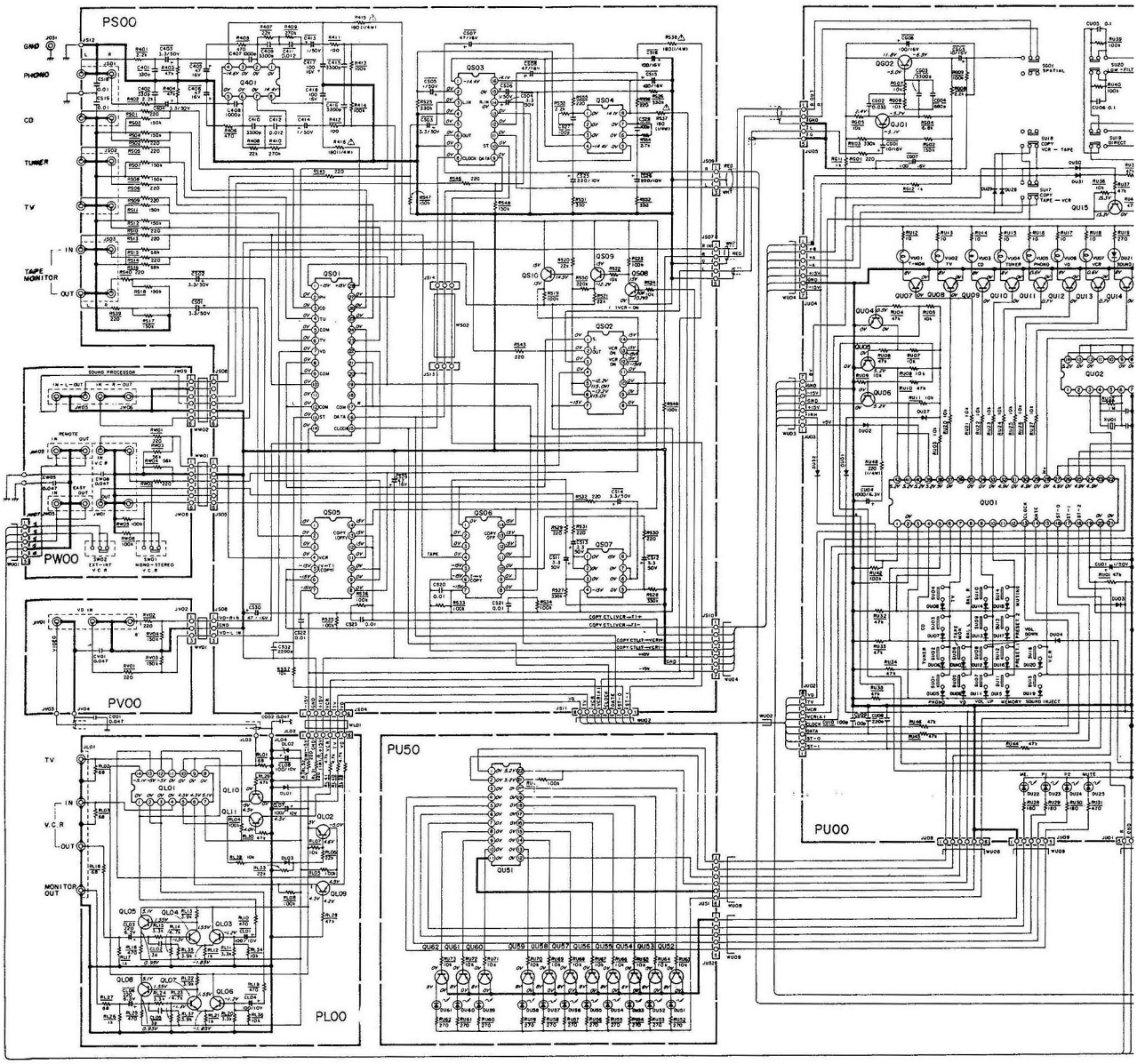

F001	FS10140800	FUSE 1.4A 250V
F002	FS10315800	FUSE 3.15A 250V [E]
L001	TS17631010	POWER TRANSF. [N, A]
L001	TS17631030	POWER TRANSF. [E]
ST01	SP04020480	PUSH SWITCH SPEAKER
ST02	SP01010960	PUSH SWITCH POWER
LN01	LY20240260	RELAY SPEAKER PROTECTOR

SG01	SP02011270	PUSH SWITCH
SU01 ~ SU16	SP01011000	PUSH SWITCH
SU17 ~ SU20	SP02011270	PUSH SWITCH
VU01 ~ VU07	IN10080650	LAMP 8V 50 mA
SW01	SS01020520	SLIDE SWITCH VCR
SW02	SS01020520	SLIDE SWITCH REMOTE
RF21	RY01040050	VARIABLE 100KΩ

NOTE ON SAFETY :
Symbol ⚠ Fire or electrical shock hazard. Only original parts should be used to replace any part marked with symbol ⚠. Any other component substitution (other than original type), may increase risk of fire or electrical shock hazard.

Components and wirin

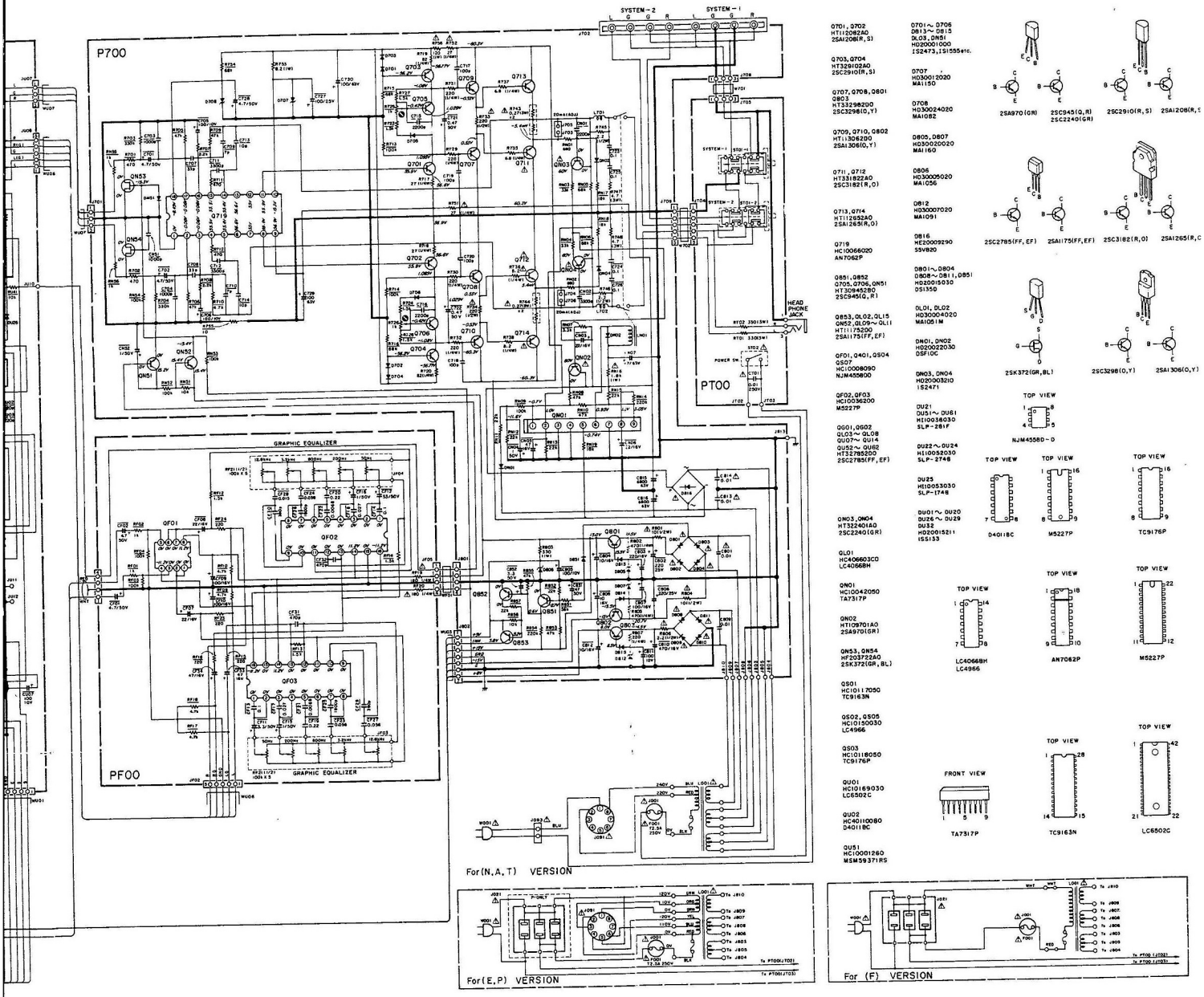

"SERVICE INFORMATION IS FOR USE BY QUALIFIED RERSONNEL ONLY – ANY MISADJUSTMENT OR MISALIGNMENT MAY BE TREATED AS A NON-WARRANTY REPAIR BY ANY MARANTZ SERVICE CENTRE –"

Kind of Common Parts

RESISTOR

R*** (1) GD05 - - - 140, Carbon film fixed resistor, ±5% 1/4W
R*** (2) GD05 - - - 160, Carbon film fixed resistor, ±5% 1/6W

C*** : **CERAMIC CAP.**
(1) DD1 - - - - 370, Ceramic condenser, disc type (titan condenser) Temp. coeff. P350 ~ N1000 50V

C*** : **CERAMIC CAP.**
(1) DK16 - - - 300, High dielectric constant ceramic condenser, disc type (titan variable) Temp. chara. 2B4 50V

C*** : **ELECTROLY CAP. (⧺) / FILM CAP. (⧻)**
(1) EA - - - - - - 10, Electrolytic condenser, one-way lead type, tolerance ±20%
(2) DF15 - - - 350, Plastic film condenser, one-way type, Mylar, ±5% 50V

* In case of ordering the common parts, please establish the correct parts number of 10 figures by the procedure "ASSIGNMENT OF COMMON PARTS CODES"

Wiring are subject to change for modification without notice.

PM551

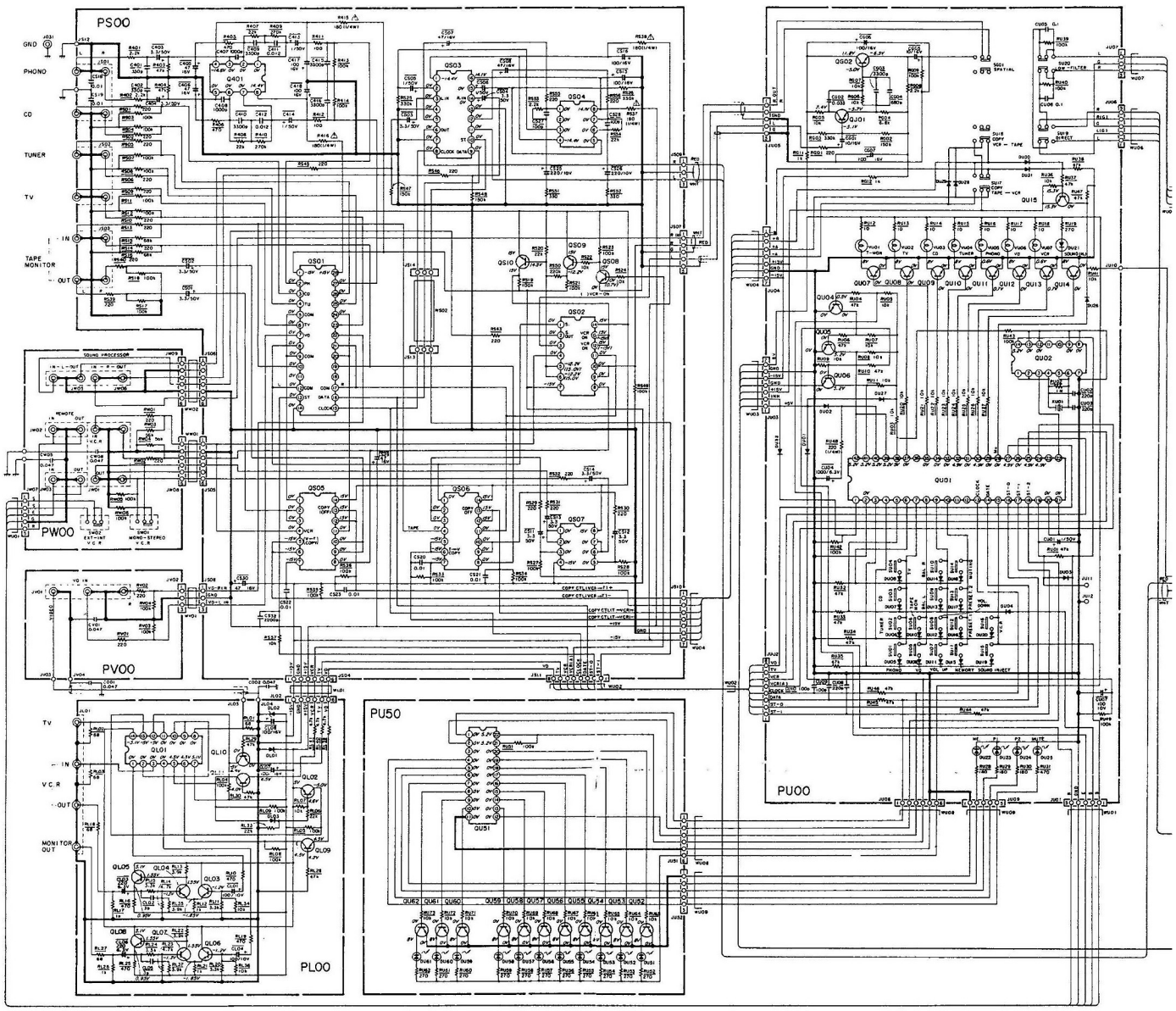

F001	FS10250800	FUSE 2.5A 250V [N, E, A]	SG01	SP02011270	PUSH SWITCH
F001	FS10600500	FUSE 6A 250V [U, C]	SU01		
F001	FS1050800	FUSE 5A 250V [P]	≀	SP01011000	PUSH SWITCH
F002	FS1050800	FUSE 5A 250V [E]	SU16		
F002	FS10250800	FUSE 2.5A 250V [P]	SU17		
L001	TS19624030	POWER TRANSF. [N, A]	≀	SP02011270	PUSH SWITCH
L001	TS19624020	POWER TRANSF. [U, C]	SU20		
L001	TS19624040	POWER TRANSF. [E]	VU01		
ST01	SP04020480	PUSH SWITCH SPEAKER	≀	IN10080650	LAMP 8V 50 mA
ST02	SP01010960	PUSH SWITCH POWER	VU07		
LN01	LY20240190	RELAY SPEAKER PROTECTOR	SW01	SS01020520	SLIDE SWITCH VCR
			SW02	SS01020520	SLIDE SWITCH REMOTE
			RF21	RY01040050	VARIABLE 100KΩ

NOTE ON SAFETY :
Symbol ⚠ Fire or electrical shock hazard. Only original parts should be used to replace any part marked with symbol ⚠. Any other component substitution (other than original type), may increase risk of fire or electrical shock hazard.

Components and wiring are subject to

Model PM551

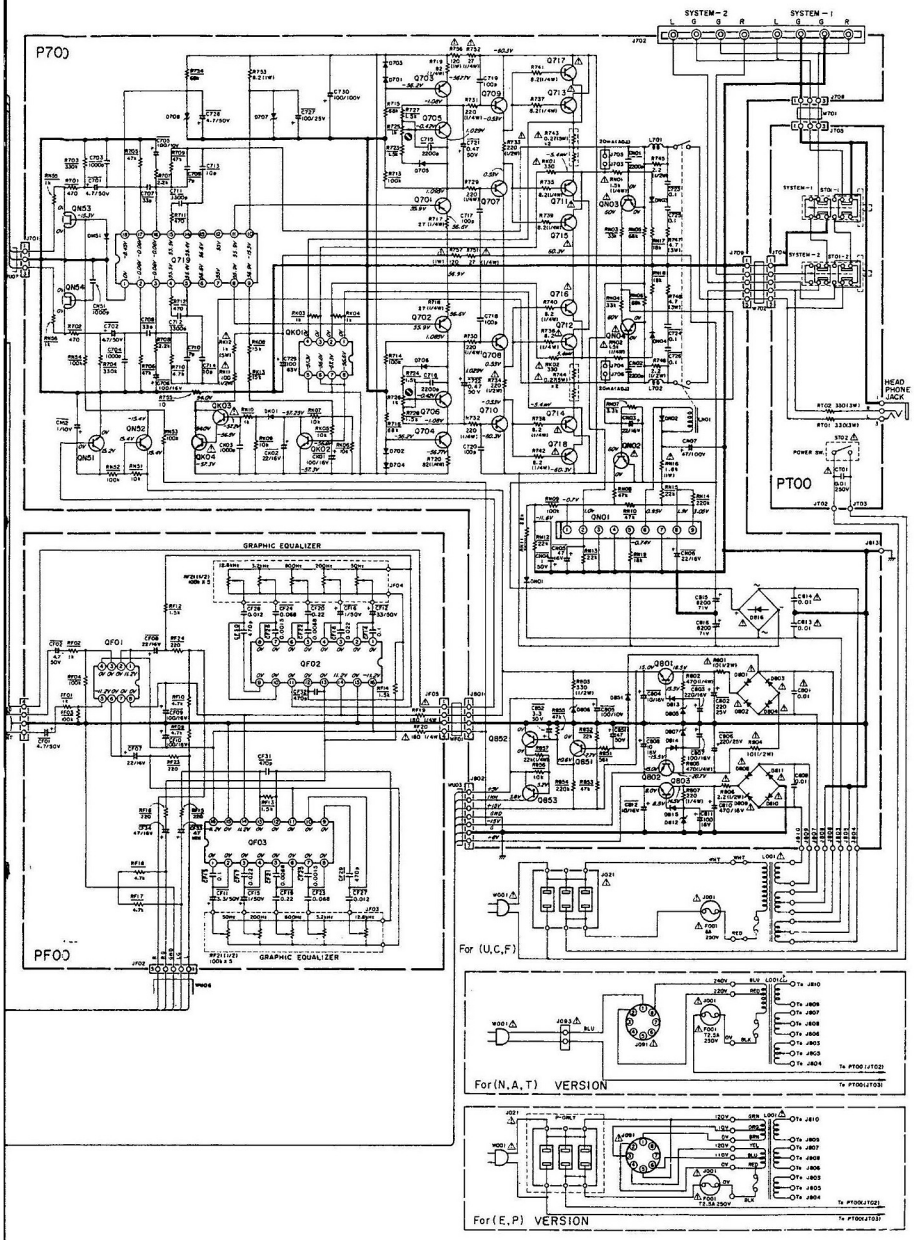

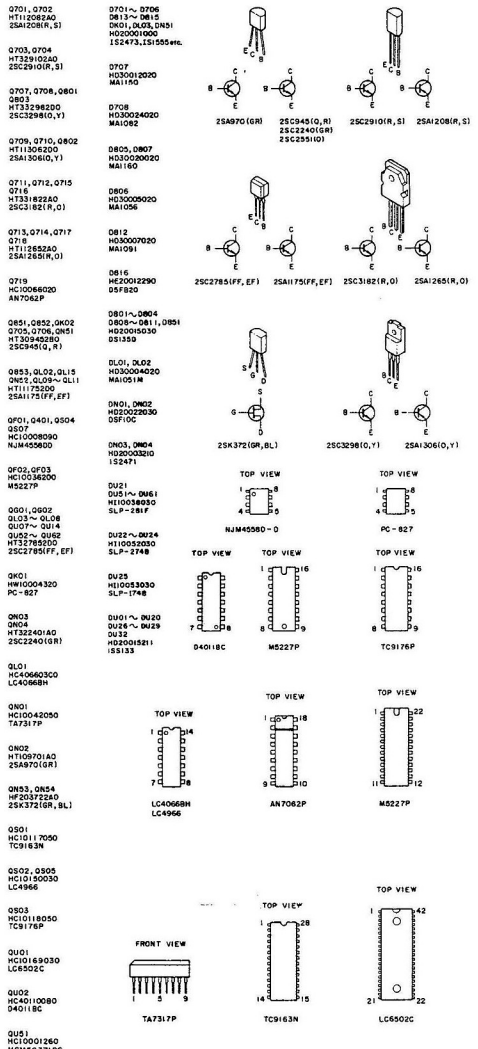

"SERVICE INFORMATION IS FOR USE BY QUALIFIED RERSONNEL ONLY – ANY MISADJUSTMENT OR MISALIGNMENT MAY BE TREATED AS A NON-WARRANTY REPAIR BY ANY MARANTZ SERVICE CENTRE – "

Kind of Common Parts

RESISTOR

R*** (1) GD05 - - - 140, Carbon film fixed resistor, ±5% 1/4W
R*** (2) GD05 - - - 160, Carbon film fixed resistor, ±5% 1/6W

C*** : **CERAMIC CAP.**
(1) DD1 - - - - 370, Ceramic condenser, disc type (titan condenser) Temp. coeff. P350 ~ N1000 50V

C*** : **CERAMIC CAP.**
(1) DK16 - - - 300, High dielectric constant ceramic condenser, disc type (titan variable) Temp. chara. 2B4 50V

C*** : **ELECTROLY CAP. (⧺) / FILM CAP. (⧺)**
(1) EA - - - - - - 10, Electrolytic condenser, one-way lead type, tolerance ±20%
(2) DF15 - - - 350, Plastic film condenser, one-way type, Mylar, ±5% 50V

* In case of ordering the common parts, please establish the correct parts number of 10 figures by the procedure "ASSIGNMENT OF COMMON PARTS CODES"

to change for modification without notice.

MARANTZ DESIGN AND SERVICE

Using superior design and selected high grade components, MARANTZ company has created the ultimate in stereo sound.
Only **original MARANTZ parts** can insure that your MARANTZ product will continue to perform to the specifications for which it is famous.

Parts for your MARANTZ equipment are generally available to our National Marantz Subsidiary or Agent.

ORDERING PARTS:

Parts can be ordered either by mail or by telex. In both cases, correct part number has to be specified. If you order by mail, fulfil MARANTZ order forms.

The following information must be supplied to eliminate delays in processing your order:

1. Complete address
2. Complete part numbers and quanties required
3. Description of parts
4. Model number for which part is required
5. Way of shipment
6. Signature: any order form or telex must be signed otherwise such part order will be considered as null and void.

TECHNICAL ASSISTANCE

Should you require any other technical support, do not hesitate to contact the Technical Department of
MARANTZ EUROPE & Co.
Avenue Louise 326 - Bte. 32
B-1050 Brussels
Belgium
Telephone: (02) 6407830 (10 l)
Telex: 26602
Fax.: (02) 649.29.20

PARTS ORDERING

Parts may be ordered at the following addresses:

AUSTRIA
HORNYPHON
Vertriebsgesellschaft GmbH
Wienerbergstrasse 1
A 1101 Wien
Austria
Telex: 132.332

AUSTRALIA
MARANTZ AUSTRALIA
PTY., Ltd.
19 Chard Road
Brookvale, NSW 2100
Australia
Telex: 24121

BELGIUM
SVD DIVISION MARANTZ
Industrialaan 1
1720 Groot-Bijgaarden
Belgium
Telex: 24466

CHILE
MARANTZ
DIVISION OF PHILIPS S.A.
AV. Santa Maria, 0760
Casilla 2687
Santiago
Telex: 240.239

DENMARK
MARANTZ
DIVISION OF PHILIPS
SERVICE A/S
Prags Boulevard 80
Postbox 1919
DK-2300 København S
Denmark
Telex: 31201

EIRE
MARANTZ IRELAND Ltd.
Newstead
Glonkeagh
Dublin 4
Telex: 25200

FINLAND
MARANTZ
DIVISION OF OY PHILIPS Ab
Kaivokatu 8
00100 Helsinki
Finland
Telex: 124811

FRANCE
MARANTZ FRANCE
4 Rue Bernard Palissy
92600 Asnières
France
Telex: 611651

GERMANY
MARANTZ GERMANY GmbH
Max-Planck-Strasse 22
6072 Dreieich 1
Germany
Telex: 529821

THE NETHERLANDS
MARANTZ
De Limiet 3
4131 NR Vianen
The Netherlands
Telex: 47679

NORWAY
MARANTZ
DIVISION OF PHILIPS A/S
Sandstuveien 40
Oslo 6
Norway
Telex: 72640

GREAT BRITAIN
MARANTZ AUDIO U.K. Ltd
Unit 15/16
Saxon Way Industrial Estate
Moor Lane
Harmondsworth UB7 OLW
Great Britain
Telex: 935196

GREECE
ADAMCO S.A.
P.O.Box 21025
Hippocratus Street 188
Athens 11410
Greece
Telex: 216.795

ITALY
MARANTZ ITALIANA S.p.A.
Via Monte Napoleone 10
20121 Milano
Italia

JAPAN
MARANTZ JAPAN, Inc.
35-1, 7-chome, Sagamiono
Sagamihara-shi, Kanagawa
Japan

KUWÀIT
AL ALAMIAH ELECTRONICS
Ussama Building
Fahd al Saleem Street
P.O.Box 23781
Safat-Kuwait
Telex: 22694

SAUDI ARABIA
AL ALAMIAH ELECTRONICS
P.O.Box 5954
University Street
Riyadh 11432
Saudi Arabia
Telex: 201530

SOUTH AFRICA
MARANTZ
DIVISION OF PHILIPS S.A.
Rainer House
Ove Street, 10
Doornfontein
Johannesburg
Telex: 483.456

SPAIN
PHONO S.A.
Ignacio Iglesias 10
Badalona (Barcelona)
Spain
Telex: 59355

SWEDEN
MARANTZ
DIVISION OF PHILIPS
Försäljning AB
Tegeluddsvägen 1
S-115 84 Stockholm
Sweden
Telex: 14060

SWITZERLAND
DYNAVOX ELECTRONIC
Route de Villars 105
1701 Fribourg
Switzerland
Telex: 942377

TURKEY
DOGRUOL Ltd.
I.M.C.
6 Blok N°6310
Unkapani
Istanbul
Turkey
Telex: 22085

MALTA
CACHIA & GALEA
Republic Street, 68D
Valetta
Telex: 1682

U.S.A.
MARANTZ COMPANY, Inc.
National Service Department
P.O.Box 577
Chatsworth, CA 91311
U.S.A.

All of the above locations are fully equipped to take care of your total service needs. Because various countries have differing configuration requirements, it is necessary that you contact the service facility in your particular country. In the event that there is no service location listed for your country, please, contact the nearest facility for the necessary assistance.

In case of difficulties, do not hesitate to contact the Technical Department at abovementioned address.

marantz®