service manual

22

marantz

model twenty two

Stereo Receiver

marantz

TABLE OF CONTENTS

	PAGE
Introduction	1
Service Notes	1
AM Tuner	1
FM Tuner	2
FM and AM Tuner Alignment	4
Power Amplifier	7
Spealer Protector Relay Circuit	9
Regulated Power Source Alignment	9
Center Tuning Meter Null Alignment	9
Test Equipment for Servicing	10

LIST OF ILLUSTRATIONS

FIGURE		PAGE
1	Main Chassis Component Locations Top View	11
2	Main Chassis Component Locations Bottom View	11
3	Rear Terminal Component Locations	12
4	Dial Stringing Diagram	12
5	FM Front End Assembly P100 Component Locations	13
6	AM Front End Assembly P200 Component Locations	13
7	PHONO Amplifier Assembly P300 Component Locations	14
8	Tone and Pre Amplifier Assembly P400 Component Locations	14
9	AM-FM IF and FM-MPX Demdulator Assembly P500 Component Locations	15
10	Main Amplifier Assembly P600 Component Locations	16
11	DC Amplifier and FM Audio Amplifier Assembly P700 Component Locations	17
12	Regulated Power Supply Unit Assembly P800 Component Locations	17
13	Hi Blend, Low Fileter, Hi Filter and Loudness Switches Unit Assembly P900 Component Locations	18
14	Tape Monitor and Mono in L.R. Switches Unit Assembly P920 Component Locations	18
15	Tone Control Unit Assembly P940 Component Locations	19
16	Temperature Compensation Unit Assembly P960 Component Locations	19
17	Speaker Protector Circuit Assembly P980 Component Locations	19

P.O. BOX 99. SUN VALLEY. CALIFORNIA. 91352

the crowning touch of perfection marantz

MODEL 22 SERVICE MANUAL

MARANTZ COMPANY, INC., A SUBSIDIARY OF SUPERSCOPE INCORPORATED

REF. DESIG.	MARANTZ PART NO.	DESCRIPTION
B093	257811202-2	Fly Wheel Shaft
B095	257805501-0	Head Phones Collar
B096	257805501-0	Head Phones Collar
B097	257805501-0	Head Phones Collar
B098	257805501-0	Head Phones Collar
B099	257805501-0	Head Phones Collar
B100	257805501-0	Head Phones Collar
B105	257810103-0	Heat-Sink + Punched Plate Support
B106	257810103-0	Heat-Sink + Punched Plate Support
B107	257810103-0	Heat-Sink + Punched Plate Support
B111	257810104-0	Escutcheon+Chassis(K)Support
B112	257810104-0	Escutcheon+Chassis(K)Support
B113	257810104-0	Escutcheon Front Bracket (K) Support
B114	257810104-0	Escutcheon Front Bracket (K) Support
B121	257810105-0	10P Terminal Support
B122	257810105-0	10P Terminal Support
B123	257810105-0	10P Terminal Support
B124	257810105-0	10P Terminal Support
B125	257810105-0	P.C Board Support
B126	257810105-0	P.C Board Support
B128	257816015-0	Relay Bracket
B131	124705850-0	Gear (K)
B132	124705801-0	Gear
B133	124705802-0	Gear
B134	121811202-0	Shaft
B136	124705850-0	Gear (K)
B137	124705801-0	Gear
B138	124705802-0	Gear
B139	121811202-0	Gear
B141	138200503-0	Clamper
B142	138200503-0	Clamper
B143	138200503-0	Clamper
B144	138200503-0	Clamper
B145	138200503-0	Clamper
B146	138200503-0	Clamper
B147	138200503-0	Clamper
B148	138200503-0	Clamper
B149	138200503-0	Clamper
B150	138200503-0	Clamper
D151	138200503-0	Clamper
D152	138200503-0	Clamper
D153	138200503-0	Clamper
B161	257905502-0	Push Switch(Ant Tuning) Collar
B162	257905502-0	Push Switch(Ant Tuning) Collar
B170	120225801-0	Hook
B171	71101239M-0	Spring
B174	71400219Q-0	MPX Lamp Spring

REF. DESIG.	MARANTZ PART NO.	DESCRIPTION
B178	71400149Q-0	Knob Spring
B179	71400149Q-0	Knob Spring
B182	257716017-0	Circut Breaker Bracket
B184	257700501-0	Coil + Chassis (K) Clamper
B185	257700501-0	Coil + Chassis (K) Clamper
B187	53228059E-0	Muting Level Nut
B189	71101559M-0	Gear Spring
B190	71101559M-0	Gear Spring
B192	114325904-0	Bush
B193	114325904-0	Bush
B501	257815901-0	Drum
B503	257812002-0	Head Phone Insulator
B504	257812003-0	Head Phone Insulator
B506	257811801-0	Power Transistor Spacer
B507	257811802-0	Power Transistor Spacer
B508	257811802-0	Power Transistor Spacer
B509	257811802-0	Power Transistor Spacer
B510	257811802-0	Power Transistor Spacer
B513	257805601-0	Buffer
B517	257805302-2	Cover
B518	257805303-0	Cover
B520	257825902-0	MPX Stereo Lamp Bush
B543	257711803-0	Lid Spacer
B544	257726201-0	Pulley
B545	257726201-0	Pulley
B546	257726201-0	Pulley
B547	257726201-0	Pulley
B548	257726201-0	Pulley
B550	59114289C-0	Coil+Chassis(K) Washer
B551	59114289C-0	Coil+Chassis(K) Washer
B552	59110339H-0	Coil+Chassis(K) Washer
B553	59110339H-0	Coil+Chassis(K) Washer
B556	145525901-0	AC Cord Bush
B557	145525901-0	Ant. Cord Bush
B559	72081604A-0	62¾" String
B561	250605701-0	Leg
B562	250605701-0	Leg
B563	250605701-0	Leg
B564	250605701-0	Leg
B566	141511801-0	Fly Wheel Spacer
B567	257710602-0	Fly Wheel Bearing
B569	257711805-0	MPX Lamp Spacer
B570	149325902-0	MPX Lamp Bush
B571	149325902-0	Meter Lamp Bush
B572	149325902-0	Meter Lamp Bush
B573	102025901-0	Bush
B574	102025901-0	Bush
D001	51570306B-0	Power Amp P.C Board P. Tapt Screw

REF. DESIG.	MARANTZ PART NO.	DESCRIPTION
D002	51570306B-0	Power Amp P.C Board P. Tapt Screw
D003	51570306B-0	Power Amp P.C Board P. Tapt Screw
D004	51570306B-0	Power Amp P.C Board P.Tapt Screw
D005	51570306B-0	Power Amp P.C Board P. Tapt Screw
D006	51570306B-0	Power Amp P.C Board P. Tapt Screw
D007	51570306B-0	IF P.C Board P.Tapt Screw
D008	51570306B-0	IF P.C Board P.Tapt Screw
D009	51570306B-0	IF P.C Board P.Tapt Screw
D010	51570306B-0	IF P.C Board P.Tapt Screw
D011	51570306B-0	IF P.C Board P.Tapt Screw
D012	51570306B-0	IF P.C Board P.Tapt Screw
D013	51570306B-0	Supply P.C Board P. Tapt Screw
D014	51570306B-0	Supply P.C Board P. Tapt Screw
D015	51570308B-0	Supply P.C Board P. Tapt Screw
D016	51570308B-0	Supply P.C Board P. Tapt Screw
D017	51570306B-0	Tone P.C Board P. Tapt Screw
D018	51570306B-0	Tone P.C Board P. Tapt Screw
D019	51570306B-0	Tone P.C Board P. Tapt Screw
D020	51570306B-0	Tone P.C Board P. Tapt Screw
D021	51570306B-0	Phone P.C Board P. Tapt Screw
D022	51570306B-0	Phone P.C Board P. Tapt Screw
D023	51570306B-0	Phone P.C Board P. Tapt Screw
D024	51570306B-0	Phone P.C Board P. Tapt Screw
D025	51570306B-0	Meter P.C Board P. Tapt Screw
D026	51570306B-0	Meter P.C Board P. Tapt Screw
D027	51570306B-0	AM RF P.C Board P. Tapt Screw
D028	51570306B-0	AM RF P.C Board P. Tapt Screw
D029	51570306B-0	AM RF P.C Board P. Tapt Screw
D030	51570306B-0	FM RF P.C Board P. Tapt Screw
D031	51570306B-0	FM RF P.C Board P. Tapt Screw
D032	51570306B-0	FM RF P.C Board P. Tapt Screw

REF. DESIG.	MARANTZ PART NO.	DESCRIPTION
D033	51570306B-0	FM RF P.C Board P. Tapt Screw
D041	51570306B-0	7P Terminal P.Tapt Screw
D042	51570306B-0	7P Terminal P.Tapt Screw
D043	51570306B-0	7P Terminal P.Tapt Screw
D044	51570306B-0	7P Terminal P.Tapt Screw
D045	51570306B-0	7P Terminal P.Tapt Screw
D046	51570306B-0	7P Terminal P.Tapt Screw
D047	51570306B-0	7P Terminal P.Tapt Screw
D048	51570306B-0	7P Terminal P.Tapt Screw
D049	51570306B-0	7P Terminal P.Tapt Screw
D050	51570306B-0	7P Terminal P.Tapt Screw
D051	51570306B-0	5P Terminal P.Tapt Screw
D052	51570306B-0	5P Terminal P.Tapt Screw
D053	51570306B-0	Bracket+Chassis K P. Tapt Screw
D054	51570306B-0	Bracket+Chassis K P. Tapt Screw
D055	51570306B-0	Bracket+Chassis K Pulley Bracket P. Tapt Screw
D056	51570306B-0	Pulley Bracket P.Tapt Screw
D057	51570306B-0	Condencer P. Tapt Screw
D058	51570306B-0	Condencer P. Tapt Screw
D059	51570306B-0	Condencer P. Tapt Screw
D060	51570306B-0	Condencer P. Tapt Screw
D061	51570306B-0	Shield (Tone) P.Tapt Screw
D062	51570306B-0	Shield (Tone) P.Tapt Screw
D063	51570306B-0	Bracket P. Tapt Screw
D064	51570306B-0	Bracket P. Tapt Screw
D065	51570306B-0	FRONT Bracket+Chassis K P. Tapt Screw
D066	51570306B-0	FRONT Bracket+Chassis K P. Tapt Screw
D067	51570306B-0	FRONT Bracket+Chassis K P. Tapt Screw
D068	51570306B-0	FRONT Bracket+Chassis K P. Tapt Screw
D069	51570306B-0	Shield P. Tapt Screw
D070	51570306B-0	Shield P. Tapt Screw
D071	51570306B-0	P. Tapt Screw
D072	51570306B-0	P. Tapt Screw
D073	51570306B-0	P. Tapt Screw
D074	51570306B-0	P. Tapt Screw
D081	51570306B-0	Transistor Socket P.Tapt Screw
D082	51570306B-0	Transistor Socket P.Tapt Screw
D083	51570306B-0	Transistor Socket P.Tapt Screw
D084	51570306B-0	Transistor Socket P.Tapt Screw
D085	51570306B-0	Transistor Socket P.Tapt Screw
D086	51570306B-0	Transistor Socket P.Tapt Screw
D087	51570306B-0	Transistor Socket P.Tapt Screw
D088	51570306B-0	Transistor Socket P.Tapt Screw
D089	51570306B-0	Push Terminal P. Tapt Screw
D090	51570306B-0	Push Terminal P. Tapt Screw

REF. DESIG.	MARANTZ PART NO.	DESCRIPTION
D091	51570306B-0	Push Terminal P. Tapt Screw
D092	51570306B-0	Push Terminal P. Tapt Screw
D093	51570306B-0	Push Terminal P. Tapt Screw
D094	51570306B-0	Push Terminal P. Tapt Screw
D095	51570306B-0	P. Tapt Screw
D096	51570306B-0	P. Tapt Screw
D097	51570306B-0	P. Tapt Screw
D098	51570306B-0	P. Tapt Screw
D099	51570306B-0	P. Tapt Screw
D100	51570306B-0	P. Tapt Screw
D101	51570306B-0	P. Tapt Screw
D102	51570306B-0	P. Tapt Screw
D103	51570306B-0	P. Tapt Screw
D104	51570306B-0	P. Tapt Screw
D105	51570306B-0	P. Tapt Screw
D106	51570306B-0	P. Tapt Screw
D107	51570306B-0	P. Tapt Screw
D108	51570312B-0	P. Tapt Screw
D109	51570312B-0	P. Tapt Screw
D110	51570312B-0	Head Phone Insulator P. Tapt Screw
D111	51570312B-0	Head Phone Insulator P.Tapt Screw
D112	51570312B-0	Head Phone Insulator P.Tapt Screw
D113	51570312B-0	Head Phone Insulator P.Tapt Screw
D114	51570312B-0	Head Phone Insulator P.Tapt Screw
D115	51570312B-0	Head Phone Insulator P.Tapt Screw
D121	51060304H-9	Cover+ Bracket P.H.M.Screw
D122	51060304H-9	Cover+ Bracket P.H.M.Screw
D123	51060304H-9	Cover+ Bracket (Guide K) P.H.M.Screw
D124	51060304H-9	Cover+ Bracket (Guide K) P.H.M.Screw
D125	51060304E-9	Shield+ Shield P.H.M.Screw
D126	51060304E-9	Shield+ Shield P.H.M.Screw
D129	51060305E-9	Bracket+ Chassis K P.H.M.Screw
D130	51060305E-9	Bracket+ Chassis K P.H.M.Screw
D131	51060305E-9	Bracket+ Chassis K P.H.M.Screw
D132	51060305E-9	Bracket+ Chassis K P.H.M.Screw
D133	51060305E-9	Meter Bracket P.H.M.Screw
D134	51060305E-9	Meter Bracket P.H.M.Screw
D135	51060305E-9	Meter Bracket P.H.M.Screw
D136	51060305E-9	Bearing K P.H.M.Screw
D137	51060305E-9	Bearing K P.H.M.Screw
D138	51060305E-9	Pulley Bracket K P.H.M.Screw
D139	51060305E-9	Pulley Bracket K P.H.M.Screw
D140	51060305E-9	Indicator+ Punched Plate P.H.M.Screw
D141	51060305E-9	Indicator + Punched Plate P.H.M.Screw
D142	51060305E-9	Indicator + Punched Plate P.H.M.Screw
D143	51060305E-9	Indicator + Punched Plate P.H.M.Screw
D144	51060305E-9	Punched Plate P.H.M.Screw
D145	51060305E-9	Shield (10P Terminal) P.H.M.Screw
D146	51060305E-9	Shield (10P Terminal) P.H.M.Screw
D147	51060305E-9	Shield (10P Terminal) P.H.M.Screw
D148	51060305E-9	Shield (10P Terminal) P.H.M.Screw
D149	51060305E-9	Shield K+ Bracket K P.H.M.Screw
D150	51060305E-9	Shield K+ Bracket K P.H.M.Screw
D151	51060305E-9	Shield K+ Bracket K P.H.M.Screw
D152	51060305E-9	Shield K+ Bracket K P.H.M.Screw

REF. DESIG.	MARANTZ PART NO.	DESCRIPTION
D154	53112603E-0	Relay Hexagon Nut
D155	54042602N-0	Relay Spring Washer
D161	51060306E-9	Heat-Sink+ Bracket P.H.M.Screw
D162	51060306E-9	Heat-Sink+ Bracket P.H.M.Screw
D163	51060306E-9	Heat-Sink+ Bracket P.H.M.Screw
D164	51060306E-9	Heat-Sink+ Bracket P.H.M.Screw
D173	51060306E-9	Bracket K+ Chassis K P.H.M.Screw
D174	51060306E-9	Bracket K+ Chassis K P.H.M.Screw
D175	51060306E-9	Bracket K+ Chassis K P.H.M.Screw
D176	51060306E-9	Spring P.H.M.Screw
D177	51060306E-9	P.C. Board P.H.M.Screw
D178	51060306E-9	P.C. Board P.H.M.Screw
D181	51060306E-9	(AM Ant. Core) Bracket P.H.M.Screw
D182	51060306E-9	(AM Ant. Core) Bracket P.H.M.Screw
D183	51060306E-9	(AM Ant. Core) Bracket P.H.M.Screw
D184	51060306E-9	Circuit Breaker P.H.M.Screw
D185	51060306E-9	Circuit Breaker P.H.M.Screw
D186	51060306E-9	Slide Switch P.H.M.Screw
D187	51060306E-9	Slide Switch P.H.M.Screw
D188	51060306E-9	P.H.M. Screw
D189	51060308E-9	AM Ant.+ Bracket P.H.M.Screw
D190	51060308E-9	AM Ant.+ Bracket P.H.M.Screw
D191	51060308E-9	10P Terminal P.H.M.Screw
D192	51060308E-9	10P Terminal P.H.M.Screw
D193	51060308E-9	10P Terminal P.H.M.Screw
D194	51060308E-9	10P Terminal P.H.M.Screw
D201	51140305E-9	Push Switch O.C.H.M.Screw
D202	51140305E-9	Push Switch O.C.H.M.Screw
D203	51140305E-9	Push Switch O.C.H.M.Screw
D204	51140305E-9	Push Switch O.C.H.M.Screw
D205	51140305E-9	Push Switch O.C.H.M.Screw
D206	51140305E-9	Push Switch O.C.H.M.Screw
D207	51140305E-9	Push Switch O.C.H.M.Screw
D208	51140305E-9	Push Switch O.C.H.M.Screw
D209	51140305E-9	AM Variable Cap. O.C.H.M.Screw
D210	51140305E-9	AM Variable Cap. O.C.H.M.Screw
D211	51140305E-9	AM Variable Cap. O.C.H.M.Screw
D212	51140308E-9	Push Switch (Ant. Tuning) O.C.H.M. Screw
D213	51140308E-9	Push Switch (Ant. Tuning) O.C.H.M. Screw
D214	51570306B-0	Bracket (Relay) P. Tapt Screw
D215	51570306B-0	Bracket (Relay) P. Tapt Screw
D216	51570306B-0	Lid P. Tapt Screw
D217	51570306B-0	Lid P. Tapt Screw
D218	51570306B-0	Lid P. Tapt Screw

REF. DESIG.	MARANTZ PART NO.	DESCRIPTION
D219	51570306B-0	Lid P.Tapt Screw
D220	51060406E-0	Heat-Sink + Chassis K P.H.M. Screw
D221	51060410E-9	Leg P.H.M. Screw
D222	51060410E-9	Leg P.H.M. Screw
D223	51060410E-9	Leg P.H.M. Screw
D224	51060410E-9	Leg P.H.M. Screw
D225	51060425E-9	Coil + Chassis K P.H.M. Screw
D226	51060425E-9	Coil + Chassis K P.H.M. Screw
D227	51060304E-9	P.H.M. Screw
D228	51140305E-9	Bearing (Fly Wheel) O.C.H.M. Screw
D229	51140305E-9	Bearing (Fly Wheel) O.C.H.M. Screw
D231	51100406S-9	Lid + Chassis K B.H.M. Screw
D232	51100406S-9	Lid + Chassis K B.H.M. Screw
D233	51100406S-9	Lid + Chassis K B.H.M. Screw
D234	51100406S-9	Lid + Chassis K B.H.M. Screw
D241	51650304D-0	Gear Set Screw H.P.
D242	51650304D-0	Gear Set Screw H.P.
D243	51650304D-0	Gear Set Screw H.P.
D244	51650304D-0	Gear Set Screw H.P.
D247	51640412D-9	Fly Wheel Set Screw C.P.
D249	54040302N-0	Power Transistor Spring Washer
D250	54040302N-0	Power Transistor Spring Washer
D251	54040302N-0	Power Transistor Spring Washer
D252	54040302N-0	Power Transistor Spring Washer
D253	54040302N-0	Power Transistor Spring Washer
D254	54040302N-0	Power Transistor Spring Washer
D255	54040302N-0	Power Transistor Spring Washer
D256	54040302N-0	Power Transistor Spring Washer
D258	51570408R-0	P.H. Tapt Screw
D259	51570408R-0	P.H. Tapt Screw
D261	50060305B-9	Transistor P.H.M. Screw
D264	51042608E-0	AC Socket F.H.M. Screw
D265	51042608E-0	AC Socket F.H.M. Screw
D266	51042608E-0	AC Socket F.H.M. Screw
D267	51042608E-0	AC Socket F.H.M. Screw
D268	54052600R-0	AC Socket T.L. Washer OR
D269	54052600R-0	AC Socket T.L. Washer OR
D270	54052600R-0	AC Socket T.L. Washer OR
D271	54052600R-0	AC Socket T.L. Washer OR
D272	53112603E-0	AC Socket Hexagon Nut
D273	53112603E-0	AC Socket Hexagon Nut
D274	53112603E-0	AC Socket Hexagon Nut
D275	53112603E-0	AC Socket Hexagon Nut
D281	54050300R-0	Terminal T.L. Washer OR
D282	54050300R-0	Terminal T.L. Washer OR
D283	54050300R-0	Terminal T.L. Washer OR
D285	53110503E-9	Power Transformer Hexagon Nut
D286	53110503E-9	Power Transformer Hexagon Nut
D287	54110503E-9	Power Transformer Hexagon Nut

REF. DESIG.	MARANTZ PART NO.	DESCRIPTION
D288	54110503E-9	Power Transformer Hexagon Nut
D289	54110403E-9	Fly Wheel Hexagon Nut
D291	53110303E-9	Indicator Hexagon Nut
D292	53110303E-9	Indicator Hexagon Nut
D293	53110303E-9	AM Ant. Hexagon Nut
D294	53110303E-9	AM Ant. Hexagon Nut
D295	53110303E-9	Hexagon Nut
D298	53110603E-0	Fly Wheel Hexagon Nut
D300	54040302N-0	Lid Spring Washer
D301	54040302N-0	Lid Spring Washer
D302	54040302N-0	Lid Spring Washer
D303	54040302N-0	Lid Spring Washer
D304	54040302N-0	Indicator Spring Washer
D305	54040302N-0	Indicator Spring Washer
D306	54050300R-0	Terminal T.L. Washer OR
D307	54050300R-0	Terminal T.L. Washer OR
D308	54050300R-0	Terminal T.L. Washer OR
D309	54050300R-0	Terminal T.L. Washer OR
D310	54050300R-0	Terminal T.L. Washer OR
D311	54050300R-0	Terminal T.L. Washer OR
D312	54050300R-0	Terminal T.L. Washer OR
D313	54050300R-0	Terminal T.L. Washer OR
D314	54050300R-0	Terminal T.L. Washer OR
D315	54050300R-0	Terminal T.L. Washer OR
D321	54040402N-0	Leg Spring Washer
D322	54040402N-0	Leg Spring Washer
D323	54040402N-0	Leg Spring Washer
D324	54040402N-0	Leg Spring Washer
D325	54040502N-0	Power Transformer Spring Washer
D326	54040502N-0	Power Transformer Spring Washer
D327	54040502N-0	Power Transformer Spring Washer
D328	54040502N-0	Power Transformer Spring Washer
D329	54040402N-0	Support Spring Washer
D330	54040402N-0	Support Spring Washer
D331	54040402N-0	Support Spring Washer
D332	54040402N-0	Support Spring Washer
D333	54040402N-0	Fly Wheel Spring Washer
D334	54040602N-0	Fly Wheel Spring Washer
D335	54020401E-0	Leg Flat Washer P.
D336	54020401E-0	Leg Flat Washer P.
D337	54020401E-0	Leg Flat Washer P.
D338	54020401E-0	Leg Flat Washer P.
D339	54020501E-0	Power Transformer Flat Washer P.
D340	54020501E-0	Power Transformer Flat Washer P.
D341	54020501E-0	Power Transformer Flat Washer P.
D342	54020501E-0	Power Transformer Flat Washer P.
D344	54020601E-0	Fly Wheel Flat Washer P.
D346	54050300R-0	AM Antnna T.L. Washer OR
D347	54050300R-0	AM Antnna T.L. Washer OR
D349	54050400R-0	Ground Terminal T.L. Washer OR
D350	62041760N-0	Ground Terminal Lug

REF. DESIG.	MARANTZ PART NO.	DESCRIPTION
D353	56382040G-0	Eyelet
D354	57271240W-0	Shield K Lug Eyelet
D361	64002400R-0	Pulley RG Ring E
D362	64002400R-0	Pulley RG Ring E
D363	64002400R-0	Pulley RG Ring E
D364	64002400R-0	Pulley RG Ring E
D366	64000400R-0	Drum RG Ring E
D371	51122608E-0	Escutcheon T.H.M. Screw
D372	51122608E-0	Escutcheon T.H.M. Screw
D373	51122608E-0	Escutcheon T.H.M. Screw
D374	51122608E-0	Escutcheon T.H.M. Screw
D377	54020401S-0	Lid Flat Washer S.
D378	54020401S-0	Lid Flat Washer S.
D379	54020401S-0	Lid Flat Washer S.
D380	54020401S-0	Lid Flat Washer S.
D382	54020401E-0	Lid Flat Washer P.
D383	54020401E-0	Lid Flat Washer P.
D384	54020401E-0	Lid Flat Washer P.
D385	54020401E-0	Lid Flat Washer P.
D387	51060312E-9	Power Transistor P.H.M. Screw
D388	51060312E-9	Power Transistor P.H.M. Screw
D389	51060312E-9	Power Transistor P.H.M. Screw
D390	51060312E-9	Power Transistor P.H.M. Screw
D391	51060312E-9	Power Transistor P.H.M. Screw
D392	51060312E-9	Power Transistor P.H.M. Screw
D393	51060312E-9	Power Transistor P.H.M. Screw
D394	51060312E-9	Power Transistor P.H.M. Screw
P100	YD2578001-0	PC Board
R101	RC1010412-0	100K ohm ±10% 1/2W Carbon Film
R102	RC1010512-0	1M ohm ± 10% 1/2W Carbon Film
R103	RC1022112-0	220 ohm ± 10% 1/2W Carbon Film
R104	RC1027212-0	2.7K ohm ± 10% 1/2W Carbon Film
R105	RC1018312-0	18K ohm ± 10% 1/2W Carbon Film
R106	RC1010212-0	1K ohm ± 10% 1/2W Carbon Film
R107	RC1012212-0	1.2K ohm ± 10% 1/2W Carbon Film
R108	RC1047212-0	4.7K ohm ± 10% 1/2W Carbon Film
R109	RC1010212-0	1K ohm± 10% 1/2W Carbon Film
R110	RC1022312-0	22K ohm ± 10% 1/2W Carbon Film
R111	RC1022312-0	22K ohm ± 10% 1/2W Carbon Film
C101	CA4000001-0	FM 4 Gang Variable with Trimmer
C104	CT1100002-0	2.8PF- 12.8PF Trimmer
C105	DD1615001-0	15PF ± 10% Ceramic
C106	DK1710201-0	0.00luF ± 20% Ceramic
C107	CK1710201-0	0.00luF ± 20% Ceramic
C108	DD1001001-0	1.0PF ± 0.25PF Ceramic
C109	DD1615001-0	15PF ± 10% Ceramic
C110	CT1100002-0	2.8PF-12.8PF Trimmer
C111	DK1710201-0	0.00luF ±20% Ceramic
C112	CT1100002-0	2.8PF-12.8PF Trimmer

REF. DESIG.	MARANTZ PART NO.	DESCRIPTION
C113	DD1620001-0	20PF ±10% Ceramic
C114	DK1710301-0.0l uF	±20% Ceramic
C115	DK1710201-0	0.001uF ±20% Ceramic
C116	DD1615003-0	15PF ±10% Ceramic
C117	DD1105002-0	5PF ±0.5PF Ceramic
C118	DD1615004-0	15PF ±10% Ceramic
C119	CT1100002-0	2.8PF-12.8PF Trimmer
C120	DK1710201-0	0.001uF ±20% Ceramic
C121	DK1710201-0	0.001uF ±20% Ceramic
C122	DK1710301-0	0.01uF ±20% Ceramic
C123	DK1710301-0	0.01uF ±20% Ceramic
C124	DD1210001-0	10PF ±1PF Ceramic
C125	DK1710301-0	0.01uF ±20% Ceramic
C126	DC1103002-2	3PF ±0.5PF Feed Through
C127	DC1810201-0	0.001uF +100, -0% Feed Through
C128	DK1710201-0	0.001uF ±20% Ceramic
C129	DD1001001-0	1PF ±0.25PF Ceramic
C130	DK1710301-0	0.01uF ±20% Ceramic
L101	LA1004618-0	Antenna Coil
L102	LA1004616-0	RF Coil
L103	LA1004619-0	RF Coil
L104	LO1004603-0	OSC Coil
L105	LI1401619-0	IFT
L106	LC1302001-0	Choke Coil
L107	LC1302001-0	Choke Coil
L108	LC1302001-0	Choke Coil
T101	257810903-0	Shield
T102	257810904-0	Shield
T103	257810905-0	Shield
H101	HF200191A-0	2SK19Y Transistor
H102	HF200191B-0	2SK19GN Transistor
H103	HT308291B-0	2SC829B Transistor
H104	HD1000105-0	IN-60 Diode
H105	HD1000105-0	IN-60 Diode
P200	YD2578002-0	PC Board
R201	RT1056214-0	56K ohm ±10% 1/4W Carbon Film
R202	RT1015414-0	150K ohm ±10% 1/4W Carbon Film
R203	RT1012214-0	1.2K ohm ±10% 1/4W Carbon Film
R204	RT1022114-0	220 ohm ±10% 1/4W Carbon Film
R205	RT1082314-0	82K ohm ±10% 1/4W Carbon Film
R206	RT1033314-0	33K ohm ±10% 1/4W Carbon Film
R207	RT1033214-0	3.3K ohm ±10% 1/4W Carbon Film
R208	RT1012214-0	1.2K ohm ±10% 1/4W Carbon Film
R209	RT1033314-0	33K ohm ±10% 1/4W Carbon Film
R210	RT1012214-0	220 ohm ±10% 1/4W Carbon Film
C201	DK1710301-0	0.01uF ±20% Ceramic
C202	DK1710301-0	0.01uF ±20% Ceramic
C203	DD1615001-0	15PF ±10% Ceramic
C204	DK1840301-0	0.04uF +100, -0% Ceramic
C205	DK1840301-0	0.04uF +100, -0% Ceramic
C206	DK1710301-0	0.01uF ±20% Ceramic
C207	DK1710301-0	0.01uF ±20% Ceramic
C208	DD1620001-0	20PF ±10% Ceramic
C209	DF6539150-0	390PF ±5% Poly
C210	DK1840301-0	0.04uF +100, -0% Ceramic

REF. DESIG.	MARANTZ PART NO.	DESCRIPTION
C211	EA1060162-0	10uF 16V Electroly
L201	LA1001014-0	RF Coil
L202	LO1001035-0	OSC Coil
L203	LI1401001-0	IFT
H201	HT303711B-0	Transistor
H202	HT303711A-0	Transistor
H203	HD1000105-0	Diode
J201	YP1000036-0	Plug
J202	YP1000036-0	Plug
J203	YP1000036-0	Plug
J204	YP1000036-0	Plug
J205	YP1000036-0	Plug
J206	YP1000036-0	Plug
J207	YP1000036-0	Plug
J208	YP1000036-0	Plug
P500	YD2578005-0	PC Board
R502	RT1033114-0	330 ohm ±10% 1/4W Carbon Film
R503	RT1033114-0	330 ohm ±10% 1/4W Carbon Film
R504	RT1027114-0	270 ohm ±10% 1/4W Carbon Film
R505	RT1033114-0	330 ohm ±10% 1/4W Carbon Film
R506	RT1033114-0	330 ohm ±10% 1/4W Carbon Film
R507	RT1027114-0	270 ohm ±10% 1/4W Carbon Film
R508	RT1027214-0	2.7K ohm ±10% 1/4W Carbon Film
R509	RT1010114-0	100 ohm ±10% 1/4W Carbon Film
R510	RT1082114-0	820 ohm ±10% 1/4W Carbon Film
R511	RT1082114-0	820 ohm ±10% 1/4W Carbon Film
R512	RT1033214-0	3.3K ohm ±10% 1/4W Carbon Film
R513	RT1033214-0	3.3K ohm ±10% 1/4W Carbon Film
R514	RT1033414-0	330K ohm ±10% 1/4W Carbon Film
R515	RN1010514-0	1M ohm ±10% 1/4W Carbon Film
R516	RT1039214-0	3.9K ohm ±10% 1/4W Carbon Film
R517	RT1056214-0	5.6K ohm ±10% 1/4W Carbon Film
R518	RT1010414-0	100K ohm ±10% 1/4W Carbon Film
R520	RT1047214-0	4.7K ohm ±10% 1/4W Carbon Film
R521	RT1022214-0	2.2K ohm ±10% 1/4W Carbon Film
R522	RT1068214-0	6.8K ohm ±10% 1/4W Carbon Film
R523	RT1068214-0	6.8K ohm ±10% 1/4W Carbon Film
R524	RT1015314-0	15K ohm ±10% 1/4W Carbon Film
R525	RT1015314-0	15K ohm ±10% 1/4W Carbon Film
R526	RT1056214-0	5.6K ohm ±10% 1/4W Carbon Film
R527	RT1056214-0	5.6K ohm ±10% 1/4W Carbon Film
R528	RT1022314-0	22K ohm ±10% 1/4W Carbon Film
R529	RT1033214-0	3.3K ohm ±10% 1/4W Carbon Film
R530	RT1010314-0	10K ohm ±10% 1/4W Carbon Film
R531	RT1082114-0	820 ohm ±10% 1/4W Carbon Film
R532	RT1022114-0	220 ohm ±10% 1/4W Carbon Film
R533	RT1010314-0	10K ohm ±10% 1/4W Carbon Film
R534	RT1015314-0	15K ohm ±10% 1/4W Carbon Film
R535	RT1082114-0	820 ohm ±10% 1/4W Carbon Film
R536	RT1022114-0	220 ohm ±10% 1/4W Carbon Film
R537	RT1022014-0	22 ohm ±10% 1/4W Carbon Film
R538	RT1022014-0	22 ohm ±10% 1/4W Carbon Film
R539	RT1015314-0	15K ohm ±10% 1/4W Carbon Film
R540	RT1010414-0	100K ohm ±10% 1/4W Carbon Film

REF. DESIG.	MARANTZ PART NO.	DESCRIPTION
R541	RT1022414-0	220K ohm ±10% 1/4W Carbon Film
R542	RT1033414-0	330K ohm ±10% 1/4W Carbon Film
R543	RT1010414-0	100K ohm ±10% 1/4W Carbon Film
R544	RT1022214-0	2.2K ohm ±10% 1/4W Carbon Film
R545	RT1015414-0	150K ohm ±10% 1/4W Carbon Film
R546	RT1056214-0	5.6K ohm ±10% 1/4W Carbon Film
R547	RT1010214-0	1K ohm ±10% 1/4W Carbon Film
R548	RT1012214-0	1.2K ohm ±10% 1/4W Carbon Film
R549	RT1027314-0	27K ohm ±10% 1/4W Carbon Film
R550	RT1010314-0	10K ohm ±10% 1/4W Carbon Film
R551	RT1010214-0	1K ohm ±10% 1/4W Carbon Film
R552	RT1022114-0	220 ohm ±10% 1/4W Carbon Film
R553	RT1027314-0	27K ohm ±10% 1/4W Carbon Film
R554	RT1056214-0	5.6K ohm ±10% 1/4W Carbon Film
R555	RT1033214-0	3.3K ohm ±10% 1/4W Carbon Film
R556	RT1033214-0	3.3K ohm ±10% 1/4W Carbon Film
R558	RT1022414-0	220K ohm ±10% 1/4W Carbon Film
R560	RT1022314-0	22K ohm ±10% 1/4W Carbon Film
R561	RT1047414-0	470K ohm ±10% 1/4W Carbon Film
R562	RT1012314-0	12K ohm ±10% 1/4W Carbon Film
R563	RT1015214-0	1.5K ohm ±10% 1/4W Carbon Film
R564	RT1010114-0	100 ohm ±10% 1/4W Carbon Film
R565	RC1022312-0	22K ohm ±10% 1/2W Solid
R566	RT1010414-0	100K ohm ±10% 1/4W Carbon Film
R567	RT1082114-0	820 ohm ±10% 1/4W Carbon Film
R568	RC1010112-0	100 ohm ±10% 1/2W Solid
C501	DK1710301-0	0.01uF ±20% Ceramic Cap.
C502	DK1710301-0	0.01uF ±20% Ceramic Cap.
C503	DK1710301-0	0.01uF ±20% Ceramic Cap.
C504	DK1710301-0	0.01uF ±20% Ceramic Cap.
C505	DK1710301-0	0.01uF ±20% Ceramic Cap.
C506	DK1710301-0	0.01uF ±20% Ceramic Cap.
C507	DK1710301-0	0.01uF ±20% Ceramic Cap.
C508	DK1710301-0	0.01uF ±20% Ceramic Cap.
C510	DK1710301-0	0.01uF ±20% Ceramic Cap.
C511	DD1105001-0	5PF ±0.5PF Ceramic Cap.
C512	DK1710301-0	0.01uF ±20% Ceramic Cap.
C513	DK1710301-0	0.01uF ±20% Ceramic Cap.
C514	DK1710301-0	0.01uF ±20% Ceramic Cap.
C515	DK1710301-0	0.01uF ±20% Ceramic Cap.
C516	DK1710301-0	0.01uF ±20% Ceramic Cap.
C517	DK1710301-0	0.01uF ±20% Ceramic Cap.
C518	DD1620101-0	200PF ±10% Ceramic Cap.
C519	EA4750162-0	4.7uF 16V Electroly Cap.
C520	EA1060162-0	10uF 16V Electroly Cap.
C521	DD1620101-0	200PF ±10% Ceramic Cap.
C522	DD1620101-0	200PF ±10% Ceramic Cap.
C523	DD1650101-0	500PF ±10% Ceramic Cap.
C524	ED4750102-0	4.7uF 10V Electroly Cap.
C525	ED1747301-0	0.047uF ±20% Mylar
C526	DF5547201-0	0.0047uF ±5% Mylar
C527	DF5547201-0	0.0047uF ±5% Mylar
C528	DF5412201-0	0.0012uF ±2% Mylar
C529	ED3350163-0	3.3uF 16V Electroly Cap.
C530	DF1633201-0	0.0033uF ±10% Mylar
C531	DF1633201-0	0.0033uF ±10% Mylar

REF. DESIG.	MARANTZ PART NO.	DESCRIPTION
C532	DK1710301-0	0.01uF ±20% Ceramic
C533	ED4750102-0	4.7uF 10V Electroly Cap.
C534	ED4750102-0	4.7uF 10V Electroly Cap.
C535	DF6582101-0	820PF ±5% Poly
C536	DF6582101-0	820PF ±5% Poly
C537	DF1633201-0	0.0033uF ±10% Mylar
C538	DF1633201-0	0.0033uF ±10% Mylar
C539	DF1633201-0	0.0033uF ±10% Mylar
C540	DF1633201-0	0.0033uF ±10% Mylar
C541	DF1668201-0	0.0068uF ±20% Mylar
C542	DF1668201-0	0.0068uF ±20% Mylar
C543	DK1710301-0	0.01uF ±20% Ceramic Cap.
C544	DK1710301-0	0.01uF ±20% Ceramic Cap.
C545	DK1710301-0	0.01uF ±20% Ceramic Cap.
C546	DK1710301-0	0.01uF ±20% Ceramic Cap.
C547	DK1710301-0	0.01uF ±20% Ceramic Cap.
C548	DD1620101-0	200PF ±10% Ceramic Cap.
C549	DK1710301-0	0.01uF ±20% Ceramic Cap.
C551	EM2240251-0	0.2uF 25V Electroly
C550	DK1710301-0	0.01uF ±20% Ceramic
C552	DK1710301-0	0.01uF ±20% Ceramic Cap.
C553	DK1840301-0	0.04uF +100, -0% Ceramic Cap.
C554	DK1710301-0	0.01uF ±20% Ceramic Cap.
C555	DK1710301-0	0.01uF ±20% Ceramic Cap.
C556	DK1840301-0	0.04uF +100, -0% Ceramic Cap.
C557	EA4750161-0	4.7uF 16V Electroly Cap.
C558	DK1840301-0	0.04uF +100, -0% Ceramic Cap.
C559	DK1840301-0	0.04uF +100, -0% Ceramic Cap.
C560	EA4750162-0	4.7uF 16V Electroly Cap.
C561	DK1840301-0	0.04uF +100,-0% Ceramic Cap.
C562	DD1530101-0	300PF ±5% Ceramic Cap.
C563	DK1750201-0	0.005uF ±20% Ceramic Cap.
C564	DK1750201-0	0.005uF ±20% Ceramic Cap.
C565	DK1840301-0	0.04uF +100, -0% Ceramic Cap.
C566	DK1710201-0	0.001uF ±20% Ceramic Cap.
C567	DF1747301-0	0.047uF ±20% Mylar
C569	EA4760163-0	47uF 16V Electroly Cap.
C570	ED1060102-0	10uF 10V Electroly Cap.
C571	DK1840301-0	0.04uF +100, -0% Ceramic Cap.
C574	DD1540001-0	40PF ±5% Ceramic Cap.
C575	DD1650101-0	500PF ±10% Ceramic Cap.
C576	EA2270164-0	220uF 16V Electroly Cap.
C577	DK1710301-0	0.01uF ±20% Ceramic Cap.
C578	DK1820301-0	0.02uF +100, -0% Ceramic Cap.
C579	EA2270162-0	220uF 16V Electroly Cap.
L502	LC1223001-0	22uH Coil
L503	LC1223001-0	22uH Coil
L504	LC1223001-0	22uH Coil
L505	LC1223001-0	22uH Coil
L506	LC1223001-0	22uH Coil
L507	LI1401604-3	FM IFT (DET)
L508	LI1015601-0	FM IFT (SUB)
L509	LI1015602-0	FM IFT
L510	LI1401004-0	AM IFT
L511	LI1401005-0	AM IFT
L512	LS1001001-0	19 KHz MPX Coil

REF. DESIG.	MARANTZ PART NO.	DESCRIPTION
L513	LS1001001-0	19 KHz MPX Coil
L514	LS1001001-0	38 KHz MPX Coil
L515	LS1001006-0	38 KHz Trap MPX Coil
L516	LS1001006-0	38 KHz Trap MPX Coil
L517	LS1001006-0	19 KHz Trap MPX Coil
L518	LS1001006-0	19 KHz Trap MPX Coil
L519	LI1001616-0	FM IFT
F501	FF1107001-0	SFC 10.7 MA Ceramic Cap.
F502	DD1107001-0	SFC 10.7 MA Ceramic Cap.
H501	HC1000111-0	uA703 IC
H502	HC1000114-0	cA3011 IC
H503	HC1000114-0	cA3011 IC
H504	HT306441B-0	2SC644 S Transistor
H505	HC1000117-0	MC1304P IC
H506	HT303801B-0	2SC380 O Transistor
H507	HT303801B-0	2SC380 O Transistor
H508	HT3037210-0	2SC372 Transistor
H509	HT104951A-0	2SB495 Transistor
H510	HT303711B-0	2SC371 Transistor
H511	HT303711A-0	2SC371 Transistor
H513	HD1000105-0	IN-60 Diode
H514	HD1000105-0	IN-60 Diode
H515	HD1000101-0	IN34A Diode
H516	HD1000101-0	IN34A Diode
H517	HD1000105-0	IN-60 Diode
H518	HD1000105-0	IN-60 Diode
H519	HD1000105-0	IN-60 Diode
H520	HD1000105-0	IN-60 Diode
H521	HD1000105-0	IN-60 Diode
J501	YP1000036-0	Plug
J502	YP1000036-0	Plug
J503	YP1000036-0	Plug
J504	YP1000036-0	Plug
J505	YP1000036-0	Plug
J506	YP1000036-0	Plug
J507	YP1000036-0	Plug
J508	YP1000036-0	Plug
J509	YP1000036-0	Plug
J510	YP1000036-0	Plug
J511	YP1000036-0	Plug
J512	YP1000036-0	Plug
J513	YP1000036-0	Plug
J514	YP1000036-0	Plug
J515	YP1000036-0	Plug
J516	YP1000036-0	Plug
J517	YP1000036-0	Plug
J518	YP1000036-0	Plug
J519	YP1000036-0	Plug
J520	YP1000036-0	Plug
J521	YP1000036-0	Plug
J522	YP1000036-0	Plug
J523	YP1000036-0	Plug
J525	YP1000001-0	Plug

REF. DESIG.	MARANTZ PART NO.	DESCRIPTION
J526	YP1000001-0	Plug
J527	YP1000001-0	Plug
J528	YP1000001-0	Plug
W501	YW2578001-0	Wire Materials
P700	YD2578004-0	PC Board
R701	RT1056314-0	56K ohm ±10% 1/4W Carbon Film
R702	RT1056214-0	5.6K ohm ±10% 1/4W Carbon Film
R703	RT1022314-0	22K ohm ±10% 1/4W Carbon Film
R704	RA0502006-0	5K ohm (B) Trimmer
R705	RT1056214-0	5.6K ohm ±10% 1/4W Carbon Film
R706	RT1056314-0	56K ohm ±10% 1/4W Carbon Film
R707	RT1022314-0	22K ohm ±10% 1/4W Carbon Film
R708	RT1010314-0	10K ohm ±10% 1/4W Carbon Film
R709	RT1010314-0	10K ohm ±10% 1/4W Carbon Film
R710	RT1022314-0	22K ohm ±10% 1/4W Carbon Film
R711	RN1047414-0	470K ohm ±10% 1/4W Carbon Film
R712	RN1047414-0	470K ohm ±10% 1/4 W Carbon Film
R713	RN1015414-0	150K ohm ±10% 1/4W Carbon Film
R714	RN1015414-0	150K ohm ±10% 1/4W Carbon Film
R715	RN1022314-0	22K ohm ±10% 1/4W Carbon Film
R716	RN1022314-0	22K ohm ±10% 1/4W Carbon Film
R717	RT1056214-0	5.6K ohm ±10% 1/4W Carbon Film
R718	RT1056214-0	5.6K ohm ±10% 1/4W Carbon Film
R719	RT1010214-0	5.6K ohm ±10% 1/4W Carbon Film
R720	RT1010214-0	5.6K ohm ±10% 1/4W Carbon Film
R721	RT1015314-0	15K ohm ±10% 1/4W Carbon Film
R722	RT1015314-0	15K ohm ±10% 1/4W Carbon Film
R723	RT1012214-0	1.2K ohm ±10% 1/4W Carbon Film
R724	RT1068114-0	680 ohm ±10% 1/4W Carbon Film
R725	RT1022414-0	220K ohm ±10% 1/4W Carbon Film
R726	RT1022414-0	220K ohm ±10%1/4W Carbon Film
C701	EN2240251-0	0.22uF ±20% 25V Electroly Cap.
C702	EV2240251-0	0.22uF ±20% 25V Electroly Cap.
C703	EA1060351-0	10uF 35V Electroly Cap.
C704	EA1060351-0	10uF 35V Electroly Cap.
C705	EA1070252-0	100uF 25V Electroly Cap.
C706	EM4740251-0	0.47uF ±20% 25V Electroly Cap.
C707	EM4740251-0	0.47uF ±20% 25V Electroly Cap.
H701	HT3037210-0	2SC372 Transistor
H702	HT3037210-0	2SC372 Transistor
H703	HT104951A-0	2SA495 R Transistor
H704	HT104951A-0	2SA495 R Transistor
H705	HT307321B-0	2SC732 BL Transistor
H706	HT307321B-0	2SC732 BL Transistor
H707	HT104941C-0	2SA494 Y Transistor
H708	HT104941C-0	2SA494 Y Transistor
H709	HD3001009-0	IS336 Diode
J701	YP1000036-0	Plug
J702	YP1000036-0	Plug
J703	YP1000036-0	Plug
J704	YP1000036-0	Plug
J705	YP1000036-0	Plug
J706	YP1000036-0	Plug

REF. DESIG.	MARANTZ PART NO.	DESCRIPTION
J707	YP1000036-0	Plug
J708	YP1000036-0	Plug
J709	YP1000036-0	Plug
J710	YP1000036-0	Plug
J711	YP1000036-0	Plug
J712	YP1000036-0	Plug
J713	YP1000036-0	Plug
P300	YD2577003-0	Phono Amp PC Board
R301	RN1047314-0	47K ohm ±10% 1/4W Carbon Film
R302	RN1047314-0	47K ohm ±10% 1/4W Carbon Film
R303	RT1039114-0	390 ohm ±10% 1/4W Carbon Film
R304	RT1039114-0	390 ohm ±10% 1/4W Carbon Film
R305	RN1033414-0	330K ohm ±10% 1/4W Carbon Film
R306	RN1033414-0	330K ohm ±10% 1/4W Carbon Film
R307	GT0533112-0	330 ohm ±5% 1/2W Carbon Film
R308	GT0533112-0	330 ohm ±5% 1/2W Carbon Film
R309	GT0533412-0	330K ohm ±5% 1/2W Carbon Film
R310	GT0533412-0	330K ohm ±5% 1/2W Carbon Film
R311	GT0527312-0	27K ohm ±5% 1/2W Carbon Film
R312	GT0527312-0	27K ohm ±5% 1/2W Carbon Film
R313	RN1010414-0	100K ohm ±10% 1/4W Carbon Film
R314	RN1010414-0	100K ohm ±10% 1/4W Carbon Film
R315	RT1010314-0	10K ohm ±10% 1/4W Carbon Film
R316	RT1015314-0	15K ohm ±10% 1/4W Carbon Film
R317	RT1015314-0	15K ohm ±10% 1/4W Carbon Film
R318	RT1015214-0	1.5K ohm ±10% 1/4W Carbon Film
R319	RT1015214-0	1.5K ohm ±10% 1/4W Carbon Film
R320	RT1047114-0	470 ohm ±10%1/4W Carbon Film
R321	RT1047114-0	470 ohm ±10% 1/4W Carbon Film
R322	RT1047014-0	47 ohm ±10% 1/4W Carbon Film
R323	RN1033414-0	330K ohm ±10% 1/4W Carbon Film
R324	RN1033414-0	330K ohm ±10% 1/4W Carbon Film
C301	EV2250251-0	2.2uF 25V +40, -20% Electroly Cap.
C302	EV2250251-0	2.2uF 25V +40, -20% Electroly Cap.
C303	EA2260351-0	22uF 35V +100, -0% Electroly Cap.
C304	DF6410301-0	0.01uF 50V ±2% Poly
C305	DF6410301-0	0.01uF 50V ±2% Poly
C308	EA1070061-0	100uF 6.3V +100, -0% Electroly Cap.
C309	EA1070061-0	100uF 6.3V +100, -0% Electroly Cap.
C310	EV1050251-0	1uF 25V +40 -20% Electroly Cap.
C311	EV1050251-0	1uF 25V +40 -20% Electroly Cap.
C312	EA1070351-0	100uF 35V Electroly Cap.
C316	DF6427201-0	0.0027uF 50V ±2% Poly
C317	DF6427201-0	0.0027uF 50V ±2% Poly
H301	HT306441C-0	2SC644(T) Transistor
H302	HT306441C-0	2SC644(T) Transistor
H303	HF200301C-0	2SK30(Y) Transistor
H304	HF200301C-0	2SK30(Y) Transistor
J301	YP1000036-0	Plug
J302	YP1000036-0	Plug
J303	YP1000036-0	Plug
J304	YP1000036-0	Plug

REF. DESIG.	MARANTZ PART NO.	DESCRIPTION
J305	YP1000036-0	Plug
J306	YP1000036-0	Plug
J307	YP1000036-0	Plug
P400	YD2577004-0	Tone Amp PC Board
R401	RT1039114-0	390 ohm ±10% 1/4W Carbon Film
R402	RT1039114-0	390 ohm ±10% 1/4W Carbon Film
R403	RN1047314-0	47K ohm ±10% 1/4W Carbon Film
R404	RN1047314-0	47K ohm ±10% 1/4W Carbon Film
R405	RN1056314-0	56K ohm ±10% 1/4W Carbon Film
R406	RN1056314-0	56K ohm ±10% 1/4W Carbon Film
R407	RT1068214-0	6.8K ohm ±10% 1/4W Carbon Film
R408	RT1068214-0	6.8K ohm ±10% 1/4W Carbon Film
R409	RN1022314-0	22K ohm ±10% 1/4W Carbon Film
R410	RN1022314-0	22K ohm ±10% 1/4W Carbon Film
R411	RT1027214-0	2.7K ohm ±10% 1/4W Carbon Film
R412	RT1027214-0	2.7K ohm ±10% 1/4W Carbon Film
R413	RT1010214-0	1K ohm ±10% 1/4W Carbon Film
R414	RT1010214-0	1K ohm ±10% 1/4W Carbon Film
R415	RN1015314-0	15K ohm ±10% 1/4W Carbon Film
R416	RN1015314-0	15K ohm ±10% 1/4W Carbon Film
R417	RT1010114-0	100 ohm ±10% 1/4W Carbon Film
R418	RN1056314-0	56K ohm ±10% 1/4W Carbon Film
R419	RN1056314-0	56K ohm ±10% 1/4W Carbon Film
R420	GT0522312-0	22K ohm ±5% 1/2W Carbon Film
R421	GT0522312-0	22K ohm ±5% 1/2W Carbon Film
R422	RN1022514-0	2.2M ohm ±10% 1/4W Carbon Film
R423	RN1022514-0	2.2M ohm ±10% 1/4W Carbon Film
R424	RN1068314-0	68K ohm ±10% 1/4W Carbon Film
R425	RN1068314-0	68K ohm ±10% 1/4W Carbon Film
R426	RT1010314-0	10K ohm ±10% 1/4W Carbon Film
R427	RT1010314-0	10K ohm ±10% 1/4W Carbon Film
R428	RT1010314-0	10K ohm ±10% 1/4W Carbon Film
R429	RT1010314-0	10K ohm ±10% 1/4W Carbon Film
R430	RT1022114-0	220 ohm ±10% 1/4W Carbon Film
R431	RT1022114-0	220 ohm ±10% 1/4W Carbon Film
R432	RN1010414-0	100K ohm ±10% 1/4W Carbon Film
R433	RN1010414-0	100K ohm ±10% 1/4W Carbon Film
C401	EV2240251-0	0.22uF 25V ±20% Electroly Cap.
C402	EV2240251-0	0.22uF 25V ±20% Electroly Cap.
C403	EA2250251-0	2.2uF 25V +40, -20% Electroly Cap.
C404	EA2250251-0	2.2uF 25V +40, -20% Electroly Cap.
C405	EA2260351-0	22uF 25V Electroly Cap.
C406	EA2260351-0	22uF 35V Electroly Cap.
C407	EV2250251-0	2.2uF 25V +40, -20% Electroly Cap.
C408	EV2250251-0	2.2uF 25V +40, -20% Electroly Cap.
C409	EA1070351-0	100uF 35V
C410	EV2250251-0	2.2uF 25V +40, -20% Electroly Cap.
C411	EV2250251-0	2.2uF 25V +40, -20% Electroly Cap.
C412	DF6545101-0	450PF ±5% Poly
C413	DF6545101-0	450PF ±5% Poly
C414	EV1050251-0	1uF 25V +40, -20% Electroly Cap.
C415	EV1050251-0	1uF 25V +40, -20% Electroly Cap.
H401	HT307321B-0	2SC732 (BL) Transistor
H402	HT307321B-0	2SC732 (BL) Transistor
H403	HT104941C-0	2SA494 (Y) Transistor
H404	HT104941C-0	2SA494 (Y) Transistor
H405	HT307321B-0	2SC732 (BL) Transistor
H406	HT307321B-0	2SC732 (BL) Transistor
H407	HT104941B-0	2SA494 (Y) Transistor
H408	HT104941C-0	2SA494 (Y) Transistor
J401-J420	YP1000036-0	Plug
W401	YW2577004-0	Wire Materials
P600	YD2578006-0	Main Amp PC Board
R601	RN1047414-0	470K ohm ±10% 1/4W Carbon Film
R602	RN1047414-0	470K ohm ±10% 1/4W Carbon Film
R603	GT0510212-0	1K ohm ±5% 1/2W Carbon Film
R604	GT0510212-0	1K ohm ±5% 1/2W Carbon Film
R605	RN1047314-0	47K ohm ±10% 1/4W Carbon Film
R606	RN1047314-0	47K ohm ±10% 1/4W Carbon Film
R607	GT0282112-0	820 ohm ±2% 1/2W Carbon Film
R608	GT0282112-0	820 ohm ±2% 1/2W Carbon Film
R609	GT0510412-0	100K ohm ±5% 1/2W Carbon Film
R610	GT0510412-0	100K ohm ±5% 1/2W Carbon Film
R611	GT0515312-0	15K ohm ±5% 1/2W Carbon Film
R612	GT0515312-0	15K ohm ±5% 1/2W Carbon Film
R613	GT0510312-0	10K ohm ±5% 1/2W Carbon Film
R614	GT0510312-0	10K ohm ±5% 1/2W Carbon Film
R615	RA0202003-0	2K ohm (B) Semi Fix
R616	RA0202003-0	2K ohm (B) Semi Fix
R617	GT0510312-0	10K ohm ±5% 1/2W Carbon Film
R618	GT0510312-0	10K ohm ±5% 1/2W Carbon Film
R619	RC1018212-0	1.8K ohm ±10% 1/2W Solid
R620	RC1018212-0	1.8K ohm ±10% 1/2W Solid
R621	RT1082114-0	820 ohm ±10% 1/4W Carbon Film
R622	RT1082114-0	820 ohm ±10% 1/4W Carbon Film
R623	RC1018212-0	1.8K ohm ±10% 1/4W Solid
R624	RC1018212-0	1.8K ohm ±10% 1/4W Solid
R625	GT0562112-0	620 ohm ±5% 1/2W Carbon Film
R626	GT0562112-0	620 ohm ±5% 1/2W Carbon Film
R627	GT0518312-0	18K ohm ±5% 1/2W Carbon Film
R628	GT0518312-0	18K ohm ±5% 1/2W Carbon Film
R629	GT0518312-0	18K ohm ±5% 1/2W Carbon Film
R630	GT0518312-0	18K ohm ±5% 1/2W Carbon Film
R631	GT0518312-0	18K ohm ±5% 1/2W Carbon Film
R632	GT0518312-0	18K ohm ±5% 1/2W Carbon Film
R633	GT0547112-0	470 ohm ±5% 1/2W Carbon Film
R634	GT0547112-0	470 ohm ±5% 1/2W Carbon Film
R635	RC1010112-0	100 ohm ±10% 1/2W Solid
R636	RC1010112-0	100 ohm ±10% 1/2W Solid
R637	RC1010112-0	100 ohm ±10% 1/2W Solid
R638	RC1010112-0	100 ohm ±10% 1/2W Solid
R639	GT0533112-0	330 ohm ±10% 1/2W Carbon Film
R640	GT0533112-0	330 ohm ±10% 1/2W Carbon Film
R641	GT0522112-0	220 ohm ±10% 1/2W Carbon Film
R642	GT0522112-0	220 ohm ±10% 1/2W Carbon Film
R643	GT0515112-0	150 ohm ±10% 1/2W Carbon Film
R644	GT0515112-0	150 ohm ±10% 1/2W Carbon Film
R645	GT0533112-0	330 ohm ±10% 1/2W Carbon Film

REF. DESIG.	MARANTZ PART NO.	DESCRIPTION
R646	GT0533112-0	330 ohm ±10% 1/2W Carbon Film
R647	RC1010112-0	100 ohm ±10% 1/2W Solid
R648	RC1010112-0	100 ohm ±10% 1/2W Solid
R649	RC1010112-0	100 ohm ±10% 1/2W Solid
R650	RC1010112-0	100 ohm ±10% 1/2W Solid
R651	GW1020205-0	0.2 ohm ±10% 5W Wire Wound
R652	GW1020205-0	0.2 ohm ±10% 5W Wire Wound
R653	GW1020205-0	0.2 ohm ±10% 5W Wire Wound
R654	GW1020205-0	0.2 ohm ±10% 5W Wire Wound
C601	DF2710550-0	1uF ±20% 100V Mylar
C602	DF2710550-0	1uF ±20% 100V Mylar
C603	DF2610151-0	100PF ±10% 500V Mica
C604	DF3610151-0	100PF ±10% 500V Mica
C605	EA1070163-0	100uF 16V Electroly Cap.
C606	EA1070163-0	100uF 16V Electroly Cap.
C607	EA1070163-0	100uF 16V Electroly Cap.
C608	EA1070163-0	100uF 16V Electroly Cap.
C609	DF1710451-0	0.1uF ±20% 100V Mylar
C610	DF1710451-0	0.1uF ±20% 100V Mylar
C611	DF1710451-0	0.1uF ±20% 100V Mylar
C612	DF1710451-0	0.1uF ±20% 100V Mylar
C615	DF1722402-0	0.22uF ±20% Mylar
C616	DF1722402-0	0.22uF ±20% Mylar
C620	DK1810351-0	0.01uF 500V +100, -0% Ceramic Cap.
C621	DK1810351-0	0.01uF 500V +100, -0% Ceramic Cap.
H601	HC1000217-0	MC1741 (Motorola) IC
H602	HC1000217-0	MC1741 (Motorola) IC
H603	HT105621B-0	2SA562 (0) Transistor
H604	HT105621B-0	2SA562 (0) Transistor
H605	HT303711B-0	2SC371 (0) Transistor
H606	HT303711B-0	2SC371 (0) Transistor
H607	HT104971A-0	2SA497 (R) Transistor
H608	HT104971A-0	2SA497 (R) Transistor
H609	HT104971A-0	2SA497 (R) Transistor
H610	HT104971A-0	2SA497 (R) Transistor
H611	HT304971A-0	2SC497 (R) Transistor
H612	HT304971A-0	2SC497 (R) Transistor
H613	HT304971A-0	2SC497 (R) Transistor
H614	HT304971A-0	2SC497 (R) Transistor
H615	HD3001109-0	IS198 Diode
H616	HD3001109-0	IS198 Diode
H617	HD3001109-0	IS198 Diode
H618	HD3001109-0	IS198 Diode
H619	HV0000105-0	M8513 (R) Varistor
H620	HV0000105-0	M8513 (R) Varistor
H621	HV0000105-0	M8513 (R) Varistor
H622	HV0000105-0	M8513 (R) Varistor
J601-J603	YP1000036-0	Plug
J605-J622	YP1000036-0	Plug
J624-J627	YP1000036-0	Plug

REF. DESIG.	MARANTZ PART NO.	DESCRIPTION
T601-T608	257726702-0	Heat Sink
T609-T616	257711806-0	Spacer
P800	YD2578008-0	Power Supply PC Board
R801	HW1047002-0	47 ohm ±10% 2W Wire Wound
R802	RC1047012-0	47 ohm ±10% 2W Solid
R803	RC1027212-0	2.7K ohm ±10% 1/2W Solid
R804	RC1010212-0	1K ohm ±10% 1/2W Solid
R805	RC1047212-0	4.7K ohm ±10% 1/2W Solid
R806	RC1047212-0	4.7K ohm ±10% 1/2W Solid
R807	RC1010212-0	1K ohm ±10% 1/2W Solid
R808	RC1033212-0	3.3K ohm ±10% 1/2W Solid
R809	RC1022212-0	2.2K ohm ±10% 1/2W Solid
R810	RC1015312-0	15K ohm ±10% 1/2W Solid
R811	RA0302001-0	3K ohm (B) Trimmer
R812	RA0103001-0	10K ohm (B) Trimmer
R813	RC1027212-0	2.7K ohm ±10% 1/2W Solid
C801	EB1080501-0	1000uF 50V Electroly Cap.
C802	EB1080501-0	1000uF 50V Electroly Cap.
C803	EA4760352-0	47uF 35V Electroly Cap.
C804	EA4770351-0	470uF 35V Electroly Cap.
C805	EA1070163-0	100uF 16V Electroly Cap.
C806	EA4760352-0	47uF 35V Electroly Cap.
H801	HT304961C-0	2SC496 (Y) Transistor
H802	HT304961C-0	2SC496 (Y) Transistor
H803	HT307341C-0	2SC734 (Y) Transistor
H804	HT307341C-0	2SC734 (Y) Transistor
H805	HD3000309-0	IS332 Diode
H806	HD3000309-0	IS332 Diode
J801-J805	YP1000036-0	Plug
P900	YD2578009-0	For Switch PC Board
R901	GT0547212-0	4.7K ohm ±5% 1/2W Carbon Film
R902	GT0547212-0	4.7K ohm ±5% 1/2W Carbon Film
R903	GT0547212-0	4.7K ohm ±5% 1/2W Carbon Film
R904	GT0547212-0	4.7K ohm ±5% 1/2W Carbon Film
R905	GT0556312-0	56K ohm ±5% 1/2W Carbon Film
R906	GT0556312-0	56K ohm ±5% 1/2W Carbon Film
R907	RN1010514-0	1M ohm ±10% 1/4W Carbon Film
R908	RN1010514-0	1M ohm ±10% 1/4W Carbon Film
R909	RN1022514-0	2.2M ohm ±10% 1/4W Carbon Film
R910	RN1022514-0	2.2M ohm ±10% 1/4W Carbon Film
R911	RT1010314-0	10K ohm ±10% 1/4W Carbon Film
R912	RT1010314-0	10K ohm ±10% 1/4W Carbon Film
R913	RT1015414-0	150K ohm ±10% 1/4W Carbon Film
R914	RT1015414-0	150K ohm ±10% 1/4W Carbon Film
C901	DF5547201-0	4700PF ±5% Poly
C902	DF1668301-0	0.068uF ±10% Mylar
C903	DF1668301-0	0.068uF ±10% Mylar
C904	DF1668301-0	0.068uF ±10% Mylar
C905	DF1668301-0	0.068uF ±10% Mylar

REF. DESIG.	MARANTZ PART NO.	DESCRIPTION
C906	DF1633201-0	3300PF ±10% Mylar
C907	DF1633201-0	3300PF ±10% Mylar
C908	DF1633201-0	3300PF ±10% Mylar
C909	DF1633201-0	3300PF ±10% Mylar
C910	DF3610101-0	100PF ±10% Mica
C911	DF3610101-0	100PF ±10% Mica
C912	DF1733301-0	0.033uF ±20% Mylar
C913	DF1733301-0	0.033uF ±20% Mylar
S901	SP0404001-2	For Hi Blend Low Filter Hi Filter Loudness. Push Switch
P920	YD2578003-0	For Switch PC Board
R920	RT1010214-0	1K ohm ±10% 1/4W Carbon Film
R922-R924	RT1010214-0	1K ohm ±10% 1/4W Carbon Film
S921	SP0403001-2	S920-1 S920-2 S920-3 Tape Moni. "L" Mono "R" Push Switch
J921-J923	YP1000036-0	Plug
W921	YW2578002-0	Wire Materials
P940	YD2578010-0	Tone-Control PC Board
R941	RD0104001-0	100K ohm B Treble Variable
R942	RD0104001-0	100K ohm B Bass Variable
R943	GT0516312-0	16K ohm ±5% 1/2W Carbon Film
R944	GT0516312-0	16K ohm ±5% 1/2W Carbon Film
R945	GT0516312-0	16K ohm ±5% 1/2W Carbon Film
R946	GT0516312-0	16K ohm ±5% 1/2W Carbon Film
C941-C944	DF1622301-0	0.022uF ±10% Myler
J941-J948	57219520W-0	Lug Eyelet
P960	YD2578007-0	Comp Circuit PC Board
R961	RA0102001-0	1K ohm (B) Trimmer
R962	RA0102001-0	1K ohm (B) Trimmer
H961	HD2000301-0	HR-5A Diode
H962	HD2000301-0	HR-5A Diode
H963	HV0000105-0	M8513 (R) Varistor
H964	HD2000301-0	HR-5A Diode
H965	HD2000301-0	HR-5A Diode
H966	HV0000105-0	M8513 (R) Varistor
H967	HT304581B-0	2SC458 (B) Transistor
H968	HT304581B-0	2SC458 (B) Transistor
J961-J964	57271240W-0	Lug Eyelet
H001	HT7000410-0	SJ2001 (PNP) Transistor
H002	HT7000410-0	SJ2001 (PNP) Transistor
H003	HT9000410-0	SJ2000 (NPN) Transistor

REF. DESIG.	MARANTZ PART NO.	DESCRIPTION
H004	HT9000410-0	SJ2000 (NPN) Transistor
H005	HD2000405-0	M9235F For Protector Diode
R001	RC1068012-0	68 ohm ±10% 1/2W Solid
R002	RC1068012-0	68 ohm ±10% 1/2W Solid
R003	RC1008212-0	8.2 ohm ±10% 1/2W Solid
R004	RK0104003-0	100K ohm (B) Variable
R005	RM0254008-0	250K ohm (MN) Variable
R006	RM0254008-0	250K ohm (A) Variable
R007	GS1024002-0	24 ohm ±10% 2W Wire Wound
R008	GS1024002-0	24 ohm ±10% 2W Wire Wound
R009	GS1002202-0	2.2 ohm ±10% 2W Wire Wound
R010	GS1002202-0	2.2 ohm ±10% 2W Wire Wound
R011	RT1033101-0	330 ohm ±10% 1W Carbon Film
R012	RT1033101-0	330 ohm ±10% 1W Carbon Film
R013	RC1033012-0	33 ohm ±10% 1/2W Carbon Film
R014	RC1033012-0	33 ohm ±10% 1/2W Carbon Film
R015	RJ1022202-0	2.2K ohm ±10% 2W Carbon Film
R016	RJ1022202-0	2.2K ohm ±10% 2W Carbon Film
R017	RJ1022501-0	2.2M ohm ±10% 1W Carbon Film
R018	RC1018212-0	1.8K ohm ±10% 1/2W Carbon Film
R019	RC1027112-0	270 ohm ±10% 1/2W Carbon Film
R021	RT1056314-0	56K ohm ±10% 1/4W Carbon Film
C016	DK1810402-0	0.1uF +100, -0% Ceramic Cap.
C017	D00747353-0	0.047uF ±20% 600VDC Oil
C003	DC1810201-0	0.001uF +100, -0% Feed Through
C004	DC1103002-2	3PF ±0.5PF Fees Through
C005	DD1105001-0	5PF ±0.5P Ceramic Cap.
C006	DK1710301-0	0.01uF ±20% Ceramic Cap.
C007	ED3360061-0	33uF 6.5W Electroly Cap.
C008	DG0710450-0	0.1uF 150V ±20% MP. Cap.
C009	DG0710450-0	0.1uF 150V ±20% MP. Cap.
C010	EC4780502-0	4700uF 50V Electroly Cap.
C011	EC4780502-0	4700uF 50V Electroly Cap.
C012	DG0710350-0	0.01uF ±20% 250V MP. Cap.
C013	DG0710350-0	0.01uF ±20% 250V MP. Cap.
C014	CA0330001-0	AM 3 Gang Variable
C015	EA1070252-0	100uF 25V Electroly Cap.
H006	HD2000305-0	M9235 Diode
S001	SR0606006-0	For Function Rotary Switch
S002	SP0401007-0	For Ant. Tuning Push Switch
S003	SP0403001-2	S003-1 Muting S003-2 Main S003-3 Remote Push Switch
S004	SP0401006-2	For AC Supply Push Switch
S005	SS0202017-0	For FM-Ant. Attenuator Slide Switch
J001-J003	YT0304003-0	4P For AM-FM Ant. For Main SP. For Remote SP. Terminal
J004	YT0210001-0	For Phono Aux Tape Tape-out & in 10P Terminal
J005	YJ0100055-0	For Dubbing Out Jack
J006	YJ0100055-0	For Dubbing IN Jack
J007	YJ0100055-0	For Headphone Jack
J008	YJ0400032-0	For AC Supply Socket

REF. DESIG.	MARANTZ PART NO.	DESCRIPTION
J009	YJ0400032-0	For AC Supply Socket
J010	YJ0200007-0	For MPX Lamp Socket
J011	YJ0200007-0	For Ant Tuning Socket
J012	YJ0200007-0	For Meter Illumination Socket
J013	YJ0200007-0	For Meter Illumination Socket
J014	YJ0200038-0	For Dial Illumination Socket
J015	YJ0200039-0	For Dial Illumination Socket
J016	YJ0200040-0	For Dial Illumination Socket
J017	YJ0200041-0	For Dial Illumination Socket
J018	YT0101003-0	For Ground Terminal
J019	YJ0500014-0	For Power Transistor Socket
J020	YJ0500014-0	For Power Transistor Socket
J021	YJ0500014-0	For Power Transistor Socket
J022	YJ0500014-0	For Power Transistor Socket
J023	YL0107001-0	7P Terminal
J024	YL0107001-0	7P Terminal
J025	YL0107001-0	7P Terminal
J026	YL0107001-0	7P Terminal
J027	YL0105001-0	5P Terminal
J028	YL0105004-0	5P Terminal
J029	YL0103003-0	3P Terminal
J030	YL0103002-0	3P Terminal
J031	YL0103001-0	3P Terminal
J032	YL0103003-0	3P Terminal
M001	IM1103602-0	For AM-FM Tuning DC Meter
M002	IM1103603-0	For FM Tuning DC Meter
M003	IN1012004-0	MPX Lamp
M004	IN1008001-0	For Ant. Tuning Lamp
M005	IN1008001-0	For Meter Illumination Lamp
M006	IN1008001-0	For Meter Illumination Lamp
M007	IN1006003-0	For Dial Illumination Lamp
M008	IN1006003-0	For Dial Illumination Lamp
M009	IN1006003-0	For Dial Illumination Lamp
M010	IN1006003-0	For Dial Illumination Lamp
F001	FR1031001-0	3.15A Circuit Breaker
W001	YC0240006-0	For AC Supply AC Power Cord
W002	YW2578003-0	Wire Materials
L001	LF1140036-0	AM Ant Coil
L002	LB3007525-0	Balun
L003	LC1223001-0	Choke Coil
L004	LC2102001-0	2uH Ring Cord Choke Coil
L005	LC2102001-0	2uH Ring Cord Choke Coil
L006	TS6050101-0	Power Transformer
L007	LY2024003-0	24V DC Relay
R022	RT1010414-0	100K ohm ±10% 1/4W Carbon Film
P980	YD2578011-0	Speaker Protector PC Board
R981	RC1033212-0	3.3K ohm ±10% 1/2W Solid
R982	RT1056312-0	56K ohm ±10% 1/4W Solid
R983	RC1010412-0	100K ohm ±10% 1/2W Solid
R984	RC1027412-0	270K ohm ±10% 1/2W Solid
R985	RC1039312-0	39K ohm ±10% 1/2W Solid

REF. DESIG.	MARANTZ PART NO.	DESCRIPTION
R986	GS1010102-0	100 ohm ±10% 2W Wire Wound
R987	RC1056212-0	5.6K ohm ±10% 1/2W Solid
R988	RC1056212-0	5.6K ohm ±10% 1/2W Solid
T981	257711806-0	Spacer
C981	EA1060162-0	10uF 16V Electroly Cap.
C982	EA2270104-0	220uF 10V Electroly Cap.
C983	EA1060601-0	10uF 50V Electroly Cap.
H981	HT308282A-0	Transistor
H982	HT309842A-0	Transistor
H983	HT306962A-0	Transistor
H984	HD2000110-0	IS-1665 Diode
H985	HD2000110-0	IS-1665 Diode
J981-J987	YP1000036-0	Plug

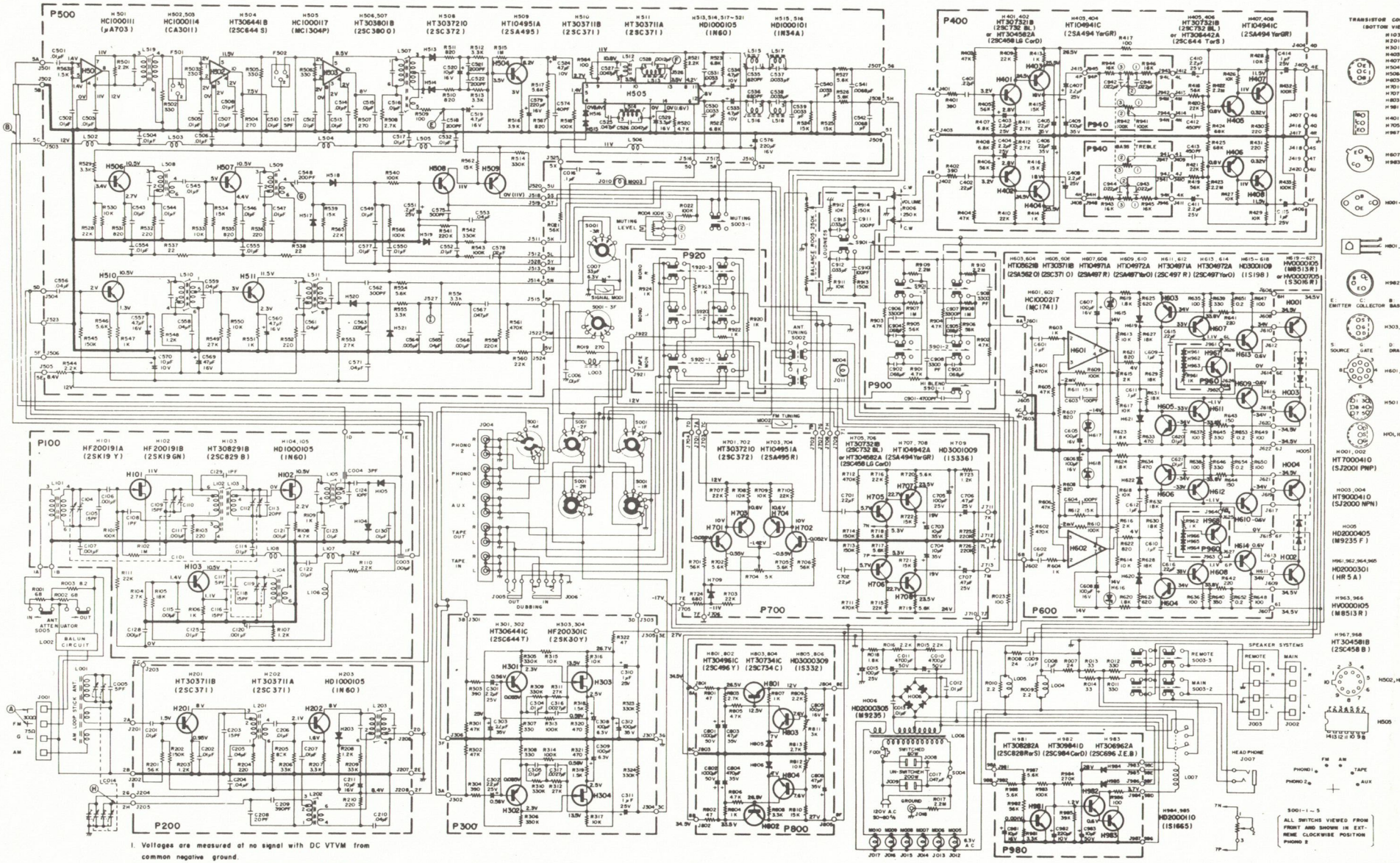

1. Voltages are measured at no signal with DC VTVM from common negative ground.
2. Voltages in parethesiss are values measured at 1KμV FM stereo signal applied. Stereo switch in stereo position.

SCHEMATIC DIAGRAM OF MODEL 22

1969-10-27
11-21

TABLE OF CONTENTS

	PAGE
Introduction	1
Service Notes	1
AM Tuner	1
FM Tuner	2
FM and AM Tuner Alignment	4
Power Amplifier	7
Spealer Protector Relay Circuit	9
Regulated Power Source Alignment	9
Center Tuning Meter Null Alignment	9
Test Equipment for Servicing	10

LIST OF ILLUSTRATIONS

FIGURE		PAGE
1	Main Chassis Component Locations Top View	11
2	Main Chassis Component Locations Bottom View	11
3	Rear Terminal Component Locations	12
4	Dial Stringing Diagram	12
5	FM Front End Assembly P100 Component Locations	13
6	AM Front End Assembly P200 Component Locations	13
7	PHONO Amplifier Assembly P300 Component Locations	14
8	Tone and Pre Amplifier Assembly P400 Component Locations	14
9	AM-FM IF and FM-MPX Demdulator Assembly P500 Component Locations	15
10	Main Amplifier Assembly P600 Component Locations	16
11	DC Amplifier and FM Audio Amplifier Assembly P700 Component Locations	17
12	Regulated Power Supply Unit Assembly P800 Component Locations	17
13	Hi Blend, Low Fileter, Hi Filter and Loudness Switches Unit Assembly P900 Component Locations	18
14	Tape Monitor and Mono in L.R. Switches Unit Assembly P920 Component Locations	18
15	Tone Control Unit Assembly P940 Component Locations	19
16	Temperature Compensation Unit Assembly P960 Component Locations	19
17	Speaker Protector Circuit Assembly P980 Component Locations	19

INTRODUCTION

This service manual was prepared for use by Authorized Warranty Stations and contains service data for the Marantz Model 22 Stereophonic Receiver.

Servicing information and voltage data included in this manual are intended for use by the knowledgeable and experienced technician only. All instructions should be read carefully. No attempt should be made to proceed without a good understanding of the operation of the Receiver. A brief functional description and associated block diagram, furnished in the Operating Instruction Manual for the Model 22 Receiver, provides functional data about the Receiver as an aid in this understanding.

The parts list furnishes information by which replacement parts may be ordered from the Marantz Company. A description is included for parts which can be usually be obtained through local suppliers.

1. SERVICE NOTES

As can be seen from the circuit diagram the chassis of the Model 22 consists of the following units. Each unit mounted on a printed circuit board is described within the square enclosed by a bold dotted line on the circuit diagram.

1. FM Front End Unit ..... mounted on PC board, P100
2. AM Front End Unit ..... mounted on PC board, P200
3. AM IF Amplifier, FM IF Amplifier, FM MPX Stereo Demodulator, and FM Sub-IF Amplifier ..... All are mounted on PC board, P500
4. Auxiliary Audio Amplifier for FM tuner output, and FM Center tuning Meter Amplifier ..... mounted on PC board, P700
5. Tone Amplifier ..... mounted on PC board, P400
6. PHONO Amplifier ..... mounted on PC board, P300
7. Main Amplifier ..... mounted on PC board, P600
8. High and Low Filter Unit ..... mounted on PC board, P900
9. Regulated Power Supply Unit ..... mounted on PC board, P800
10. Protector Relay Driving Unit ..... mounted on PC board, P980

2. AM TUNER

2.1 Circuit Description

The AM tuner consists of two units, front end and IF amplifier unit mounted on a part of PC board P500.

The front end mounted on a PC board P200 is comprised of an RF amplifier, converter and a diode. The AM signals induced in a ferrite bar antenna are applied to base of the RF amplifier transistor H201 through a capacitor C201 and amplified to the level required for overcoming the converter noise, thus assures good SN performance. The tuned circuits

inserted in out- and input circuit of the RF amplifier gives very high image and spurious rejection performance. Thus amplified and selected signals are applied to the base of converter transistor H202 through a coupling capacitor C206. While the local oscillator voltage is injected to the emitter of H202 through capacitor C207. Both the signals are then mixed at base-emitter junction and converted into 455KHz intermediate frequency. The amplified IF signals obtained from the collector of H202 is applied to the first IF transformer L203.

The diode H203, reverse-biased by resistor R208 and R209, eliminates signal overload distortion without sacrificing any receiving sensitivity.

The IF signal output is led to the IF amplifier consisting of two stages (H510 and H511) through the pin J206 and J504, and amplified to the high level. The amplified IF output is applied to the diode H520 to detect audio signal. Then the detected audio signal is led to the output pin J515 through filtering network. The DC component of the detected IF signals is used as AGC voltage to control emitter current of H510 and RF amplifier transistor H201. A part of IF signal output is also applied to diode H521 through capacitor C562 and rectified to obtain DC current for energizing the signal strength meter M001.

2.2 Suggestion for Trouble Shooting of AM Tuner

Symptom: No AM Reception

First try to tune stations by rotating fly-wheel tuning knob slowly and observe the AM signal strength meter whether it deflects or not. If the signal strength meter gives a deflection at several frequency received, no failure exists in the stages at least preceeding IF transformer L511. Next connect an oscilloscope to the tuner output pin J515 and check audio signal. If the signal strength meter does not deflect, check the local oscillator circuit. Normal oscillator voltage at hot end of the oscillator capacitor is 2 to 3 volts, varying with tuning capacitor position. When measuring oscillator voltage use an RF VTVM, no circuit tester gives correct indication. If the local oscillator voltage is normal, check all voltage distribution in the tuner circuit by using a circuit tester and compare the measured values with those written in the schematic diagram.

3. FM TUNER

3.1 Circuit Description

The FM tuner section consists of three printed circuit boards, FM front end unit, IF amplifier / MPX stereo decording unit, and DC meter amplifier / FM audio amplifier unit.

FM signals induced by an FM antenna are led to FM antenna coil L101 through an attenuator switch and a BALUN coil. These signals are then applied to FET RF amplifier, the amplified output is applied to FET Mixer H102 through two tuned circuit and converted into 10.7MHz IF signals. H103 is the local oscillator transistor. The AGC voltage, obtained by rectifying a part of first IF output, is applied to the gate of FET H101

through the network R110, R111 and R101. The converted IF signals are led to the input pin J501 of IF amplifier unit consisting of three ICs (H501, H502 and H503) and two ceramic filters having sharp cut off characteristics. The IF signals fully amplified is then applied to the FM discriminator transformer L507 and demodulated into audible signals. The demodulated signals are then applied to the base of composite amplifier transistor H509 to obtain enough output power necessary to drive the stereo decording circuit packaged in IC H505. The amplified output is applied to the input pin 3 of the IC. Thus L and R channel stereophonic audio signals obtained are led to the FM audio amplifier mounted on a half of PC board P700.

The DC current caused at the point E in the FM discriminator circuit is used as a direct current source for driving the FM center tuning meter M002. First the direct current is led to the base of differencial amplifier transistor H701 through R514 and antenna tuning switch S002. The amplified DC output obtained from the emitter of H703 is led to the center tuning meter. R704 is the trimming resistor for null adjustment of the meter.

The stereo decording IC H505 is also equipped with an audio muting circuit and an automatic stereo-monophonic, switching circuit. Activating signals required for these circuits are obtained from the FM sub-IF amplifier unit consisting of two transistors H506 and H507. The amplifier unit obtains its input signal from the second FM IF amplifier stage through a small coupling capacitor C511 and amplifies it. The amplified output is then applied to the diode H517 and H518 and rectified into direct current. A part of the DC current is supplied to the signal strength meter M001 through resistor R539 and rotary switch S001-3R. The other part is applied to the DC amplifier consisting of H508 and H509, and its output is then fed to the muting control pin of IC H505 through the muting switch S003-1 and resistor R518. R004 is a muting level control variable resistor. Stereo-monophonic, automatic switching signal is also obtained from the rectified circuit and applied to the pin 4 of IC H505 through a resistor R565, R021, Diode H516 and H515.

The model 22 is equipped with a multipath antenna tuning system for the best FM reception. The simple principle of the tuning is given as follows. An FM antenna not correctly positioned toward an FM station induces some kind of distortion in FM signals. Thus deteriorating tonal quality of the programs. To reduce this distortion a suitable antenna direction must be found. For this purpose, the multipath antenna tuning system is employed.

The FM signals converted into 10.7MHz is applied to the sub-IF amplifier, the amplified output is then rectified by the diodes H517 and H518 as stated above. The rectified output is not true direct current but includes many amplitude modulated components caused by unsuitable FM antenna direction. These amplitude modulated components are separated by again detecting the rectified output by the diode H159 and led to the antenna tuning (FM center tuning) meter M002 through antenna tuning switch S002. The greater the deflection of the antenna tuning meter, the greater

the distortion of signal.

3.2 Suggestions for Trouble Shooting of FM Tuner

3.2.1 Symptom: No FM Reception

First turn on the power switch and try to tune FM stations. Rotate the fly wheel tuning knob slowly and observe the FM signal strength meter and FM center tuning meter. If the center tuning meter deflects at several frequency, the tuner circuits preceeding the discriminator circuit may have no failure. When the signal strength meter deflects but no deflection is obtained in the center tuning meter, there may be some defects between final FM IF amplifier H503 and the discriminator circuit. When no reading are obtained in both meters, check the local oscillator circuit by using an RF VTVM. Normal local oscillator voltage is about, 1 to 2 volts at hot end of the tank circuit. If the oscillator voltage is normal, check all the voltage distributions and compare them with those shown in the schematic diagram. When both meters deflect but no FM station is obtained check the following points by using a high sensitive oscilloscope; collector of composite amplifier transistor. Multiplex stereo output pin J507 or J508 and FM audio output terminal J711 or J713.

3.2.2 Sympton: No Stereo Separation

First check the MONO (L.R.) switches are in normal "out" position. Connect FM RF signal output modulated by stereo signal to the rear FM antenna terminals and check the stereo beacon lamp is turned on or not. When the lamp is not turned on, connect an oscilloscope to the test point F and observe 38KHz stereo subcarrier is correctly generated or not.

4. FM AND AM TUNER ALIGNMENT

The following alignment for FM and AM tuner requires many precision measurement equipments. No alignment should be performed in the field unless the service man has those equipments and enough knowledge in solid state amplifier components, since all the units are factory aligned and not become misaligned by themselves.

4.1 AM Front End

4.1.1 Local Oscillator and Tracking Alignment

1) Set AM signal generator to 600KHz, 400Hz 30% modulation. Tune the receiver to the same frequency and adjust oscillator coil L202 until the dial pointer coincides with the 600KHz marking on the dial.

2) Set AM Signal generator to 1400KHz. Tune the receiver to the same frequency and adjust the trimming capacitor mounted on the tuning capacitor.

3) Repear procedure 1 and 2 until no further adjustment is necessary

between the low end and the high end.

4) Set the generator to 600KHz. Tune the receiver to the same frequency and adjust antenna coil L001 in the plastic case and RF coil L201 for maximum output.

5) Set the generator to 1400KHz. Tune the receiver to the same frequency and adjust each antenna trimming capacitor and RF trimming capacitor mounted on the tuning capacitor for maximum output.

6) Repeat procedure 4 and 5 until no further improvement is obtained.

Note: During tracking alignment reduce the signal generator output as necessary to avoid AGC action.

4.2 AM IF Amplifier

For aligning the AM IF-amplifier, a sweep generator with marker generator combined is necessary.

1) Connect sweep generator across pin J205 and common ground, connect an oscilloscope to test pin J527.

2) Turn each primary and secondary core of IF transformers L203, L510 and L511 for maximum and symmetrical response.

4.3 FM Front End

4.3.1 Local Oscillator Adjustment

1) Measuring instruments connection
Connect an FM signal generator to the FM antenna terminals on the back side of the set. Connect a VTVM or an oscilloscope across the speaker system terminals.

2) Set FM signal generator to 90MHz, 400Hz 100% modulation. Tune the receiver to the same frequency and adjust oscillator coil L104 until the dial pointer coincides with the 90MHz marking on the dial.

3) Set FM signal generator to 106MHz. Tune the receiver to the same frequency and adjust the trimming capacitor C119 until the dial pointer coincides with the 106MHz marking on the dial.

4) Repeat procedure 2 and 3 until no further adjustment is necessary between the low end and the high end.

4.3.2 FM Tracking Alignment

1) Set FM signal generator to provide about 5uV at 90MHz. Tune the receiver to the same frequency and turn each core of L101, L102 and L103 for maximum output.

2) Set FM signal generator to 106MHz. Tune the receiver to the

same frequency and adjust trimming capacitors C104, C110 and C112 for maximum output.

3) Repeat procedure 1 and 2 until no further improvement is obtained.

4.3.3 FM IF Amplifier

To align this IF amplifier, connect FM signal generator to the FM antenna terminals and set the generator to 98MHz, 400Hz 100% modulation with output level about 5uV. Tune the receiver to this frequency and turn each core of IF transformers, L105 and L519 for maximum output. To align the discriminator transformer L507, increase the FM signal output level to about 2KuV and connect a distortion meter across the tuner output or speaker output terminals.

1) First tune the receiver off station until only interstation noise is heard, then turn the secondary core of L507 so that the pointer of center tuning meter indicates its center.

2) Tune the receiver to 98MHz FM signals again with center tuning meter in its null position, then turn the primary core of discriminator transformer L507 so that minimum distortion is obtained.

4.3.4 FM Stereo Demodulator

A stereo multiplex and RF FM signal generator is required to make the separation adjustment on this circuit.

Perform the following adjustments in sequence.

1) Set FM signal generator to 97MHz, 2KuV output level. Tune the receiver to the same frequency, be sure the pointer of center tuning meter is at the center position, and MONO(L+R) switch is in its normal "out" position.

2) Connect oscilloscope probe to pin J526 and turn each core of L514, L512 and L513 for maximum stereo carrier wave on the CRT.

3) Turn the core of L514 again so that same stereo separation is obtained in both L and R channels.

4) Adjust a trimming resistor R024 for maximum and same stereo separation in both channels.

Note: In early units no trimming resistor is provided.

4.3.5 FM Sub-IF Amplifier Alignment

To align the sub-IF amplifier, tune the receiver to FM signals and turn each core of L508 and L509 so that the FM signal strength meter reads maximum deflection. To read the signal strength meter the antenna tuning switch must be in its normal out position.

5. POWER AMPLIFIER

5.1 Circuit Description

5.1.1 Amplifier

The signal from the tone amplifier is applied to the inverting input (pin 2) of the operational amplifier H601 through the input coupling network R601, C601 and R603. This network provides a high input impedance to the amplifier and prevents any DC from appearing at the op amp input.

The output of the op amp is divided by networks C609/R627 and C611/R631, and is applied to the base of H607 and H611. H607 and H611 provide the voltage amplification necessary to drive the driver (buffer) transistors H613 and H609. H613 and H609 are operated in a complimentary-symmetry configuration with their respective power transistors H001 and H003.

The output of H613 is applied to the base of H001, and the output of H609 is applied to H003. The combined operation of PNP transsistors H001 and NPN transistors H003 provide a push-pull output appearing at diodes H005. This output is applied to network R010 L005, and via relay L007 contact to the LOUDSPEAKER output terminals (J002).

To maintain overall amplifier stability and linearity, degenerative feedback is utilized throughout the amplifier. This feedback is also necessary to reduce distortion to within specified limits. R/C network R611, C603, and R607 condition the feedback signal for application to the non-inverting input (pin 3) of the op amp.

Except for the input, the amplifier uses direct coupling throughout. An offset voltage is applied to pin 3 of the op amp to nullify any undesirable DC output signal. The offset voltage is provided by a voltage divider consisting of R613, R617, and R615 between the plus and minus 14 volt source such that DC OFFSET ADJ. R615 may be adjusted through a plus or minus 1.3 volt range.

5.1.2 Dynamic Bias

Dynamic bias is applied to the bases of driver transistors H613 and H609. H613 and H609, in turn, determine the class of operation for the power amplifier (PA) transistors H001 and H003, thus maintaining a constant class of operation by establishing and maintaining the proper collector-to-emitter current. This dynamic bias circuit is comprised of H967, R961, and temperature sensitive diode H961, H962, H963. The circuit provides a variable base bias for driver transistors H613 and H609 that automatically maintains the proper base voltage (bias condition) with temperature change. Temperature sensitive biasing components of the dynamic bias circuit are thermally coupled through a heatsink to the PA transistors.

5.1.3 Amplifier Protection

Protection for the amplifier is provided by sensing-resistors R641

and R643 operating in conjunction with H603 and H605. When the output power transistors H001 and H003 are over-driven, and the output power exceeds an approximate 55 watts, the current increase through the power output transistors causes an increases current flow through R641 and R643. The resulting voltage drop across R641 and R643 controls the biasing of H603 and H605, resulting in the clipping of any input signal of greater amplitude than is required to cause the power output stage to deliver approximately 55 watts.

5.2 DC Balance and Bias Adjustment of The Main Amplifier

Connect a VTVM across the speaker system output terminal for the channel being tested. Set the voltage range on VTVM to the lowest scale possible, preferably 100 or 300 mV full scale deflection. First turn Bias control resistor R961 and R962 fully clockwise. Adjust DC balance control R615 until no DC voltage is obtained at the speaker terminal strip. Repeat the procedure for the other channel.

Next proceed to the Bias adjustment.

Connect the VTVM across R651 or R653 and adjust bias control resistor R961 until the VTVM reads 10mV. To adjust the other channel bias current connect the VTVM across resistor R654 or R652 and adjust bias control resistor R962 for the same voltage reading.

Note: PC board P960, on which bias control resistors R961 and R962 are located is mounted on backside of the power transistor.

5.3 Suggestions for Trouble Shooting of Power Amplifier

5.3.1 Excessive line consumption (100 watt or more).

a. Check for shorted rectifiers H006; also check C010 and C011.
b. Check for shorted transistors H613, H609, H001 and H003, or check H967. Check for open control R961, and bias diode H961--H963. Check L006 for short.

CAUTION: Because the driver and output stages are direct coupled components may fail as a direct result of an initial component failure. If a shorted transistor or zener diode is found, or control or bias diode, be sure to check the remaining driver and output components for short or open circuit before re-energizing the amplifier.

5.3.2 No Line Consumption or Zero Bias

a. Check line cord, circuit breaker, transistors H967, H001 and H003, bias diode H961---H963.
b. Check for open rectifiers H006, or open L006.

5.3.3 High D-C Voltage at Loudspeaker Terminals at all Times.

a. Check H005 for open or short.

5.3.4 No D-C Balance

a. Check H601 (op amp) and zener diodes H615 and H617.
b. Check R613, R615, and R617

6. SPEAKER PROTECTOR RELAY CIRCUIT

The speaker protector Relay circuit, mounted on PC board, P980, protects the speaker systems against any loud "POP" sound developed. This circuit is so designed that no sound is heard for the first five seconds after the power switch is turned on by the time constant of capacitor C982 and resistor R984. This circuit also protects the speaker systems against some troubles due to DC off balance between the speaker system terminals by instantly operating the relay and cutting off the speaker systems from the circuit.

7. REGULATED POWER SOURCE ALIGNMENT

The regulated power supply unit mounted on PC board P800 is dual unit. One unit consisting of transistor H801 and H803, supplies its regulated DC current to each unit, FM Front End, AM Front End, AM IF/FM IF and MPX Demodulator and differential amplifier mounted on half of PC board P700. Adjust trimming resistor R811 until the DC voltage between the J804 and ground is 12V. Any short-circuit of the DC output line may damage transistor H801. Be extremely careful not to make a short-circuit. The other unit consisting of transistor H802 and H804, furnishes its regulated output to the Tone amplifier, Phono amplifier and Auxiliary amplifier mounted on half of PC board P700. Adjust trimming resistor R812 for 27V DC output at pin J805. Be careful not to make a short-circuit. Any short circuit may damage transistor H802.

8. CENTER TUNING METER NULL ALIGNMENT

A differential amplifier consisting of four transistors (H701, H702, H703 and H704) is used to drive center tuning meter M002. The input current to the differential amplifier is obtained from the FM discriminator through resistor of R514 and antenna tuning switch S002. The null adjustment of this meter amplifier is done by adjusting trimming resistor R704 with the selector switch placed in the PHONO 1 or 2 position.

9. PHONO and tone amplifiers consist of conventional negative feed bork amplifiers and no analytical circuit description may be required.

10. TEST EQUIPMENT FOR SERVICING

Item	Manufacturer and Model No.	Use
AM Signal Generator		Signal Source for AM Alignment
Test Loop		Used with AM Signal Generator
FM Signal Generator	Less than 0.3% distortion	Signal source for FM Alignment
Audio Oscillator	Less than 0.02% residual distortion is required	Sine wave source for modulating AM or FM Signal Generator, or trouble shooting
Stereo Modulator	Less than 0.3% distortion	Modulating FM Signal Generator for Separation Alignment and trouble shooting
Oscilloscope	High Sensitivity	Wave form analysis and trouble shooting
VTVM	with RF probe	Trouble shooting
Circuit tester		Trouble shooting
Sweep Generator	For 455KHz and 10.7 MHz IF alignment	AM and FM IF alignment
8-ohm Resistors	±0.5% 50W (no inductive Resistance)	Dummy Load
Line Voltmeter	0---150V AC	Monitors line voltage
Variable Auto transformer	0 to 140V, 10amps	Adjust level of primary power to amplifier

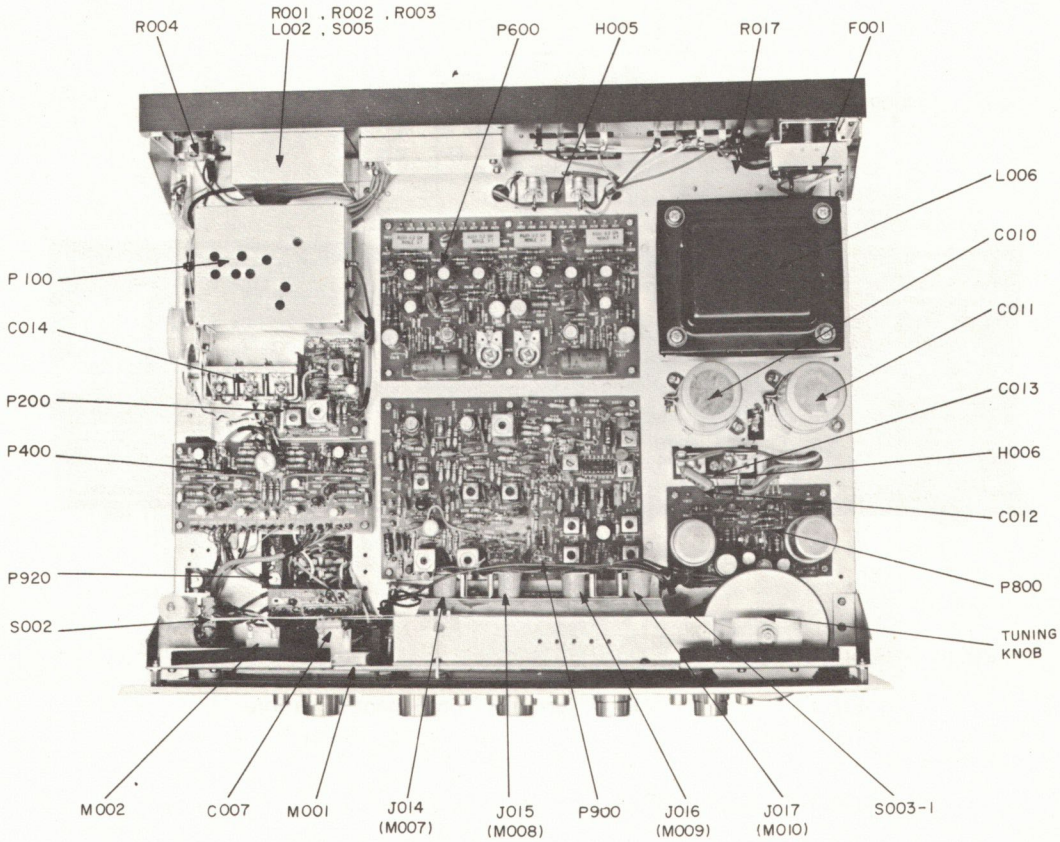

Figure 1 Main Chassis Component Locations Top View

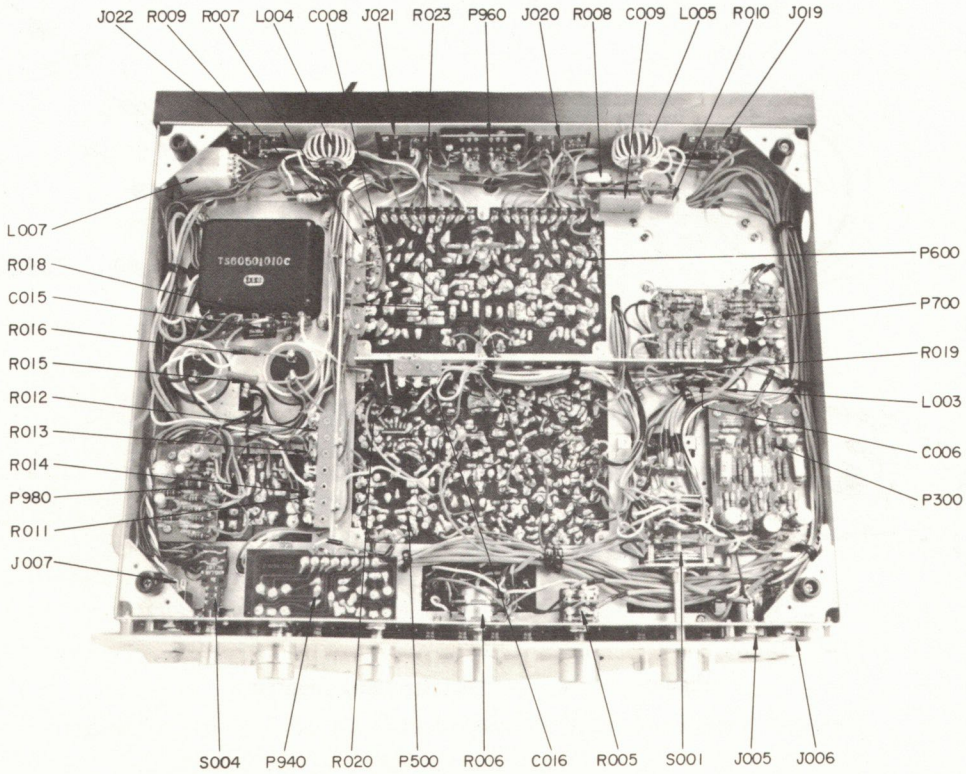

Figure 2 Main Chassis Component Locations Bottom View

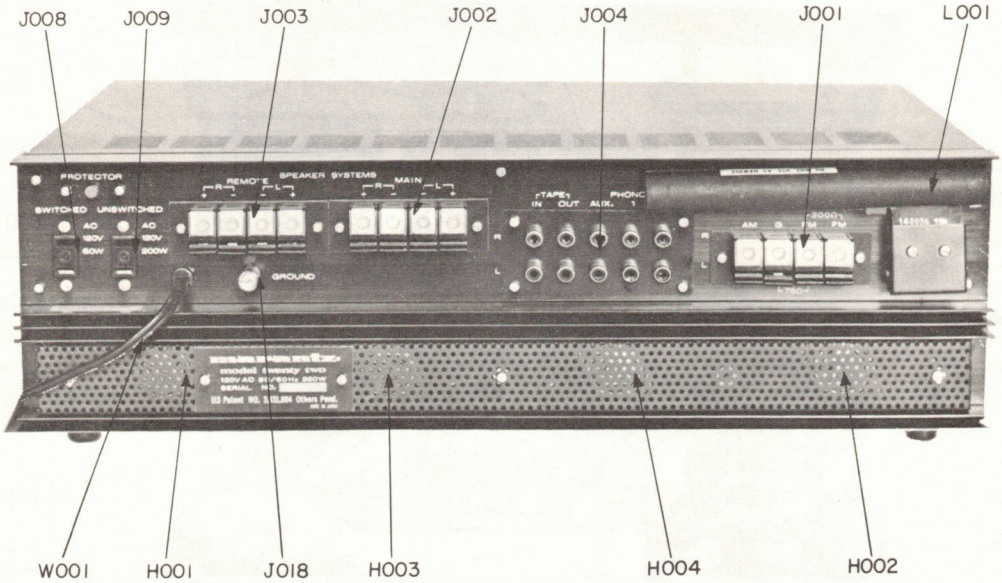

Figure 3 Rear Terminal Component Locations

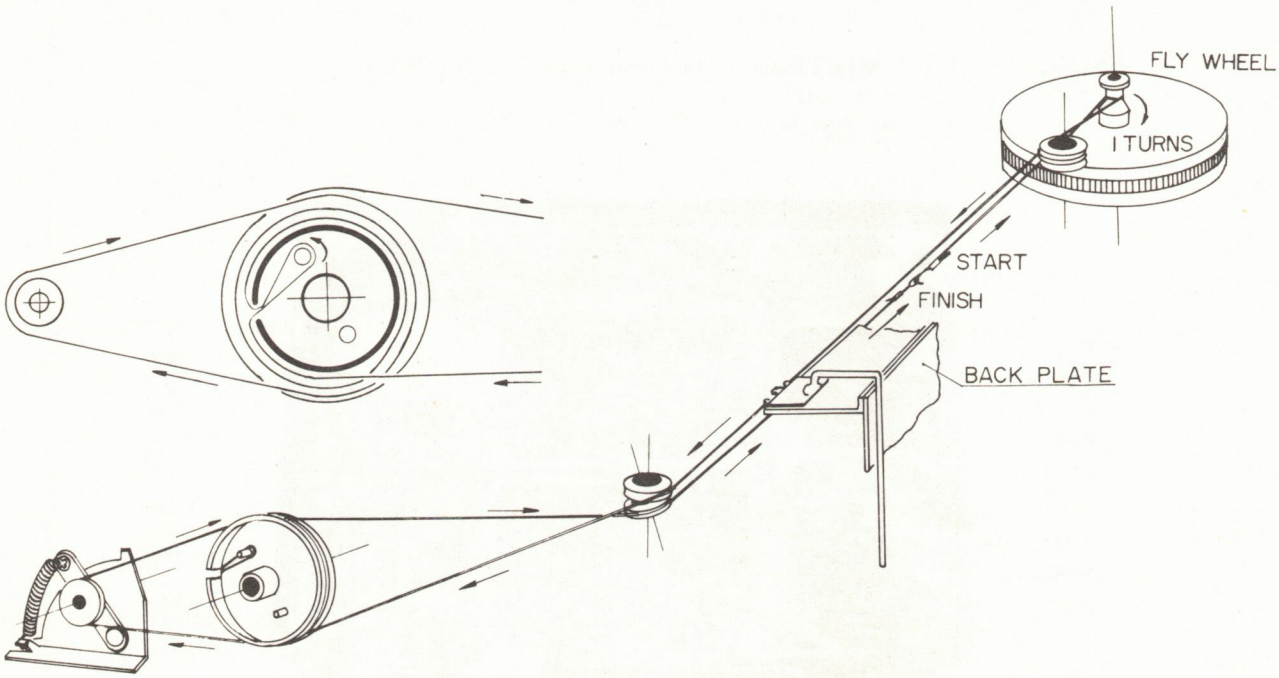

Figure 4 Dial Stringing Diagram

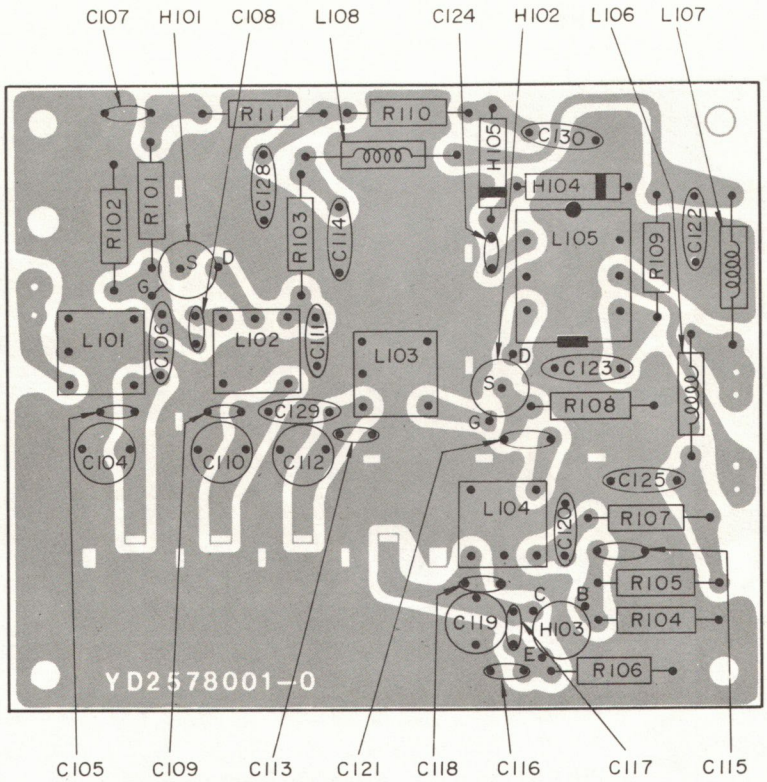

Figure 5 FM Front End Assembly P100 Component Locations

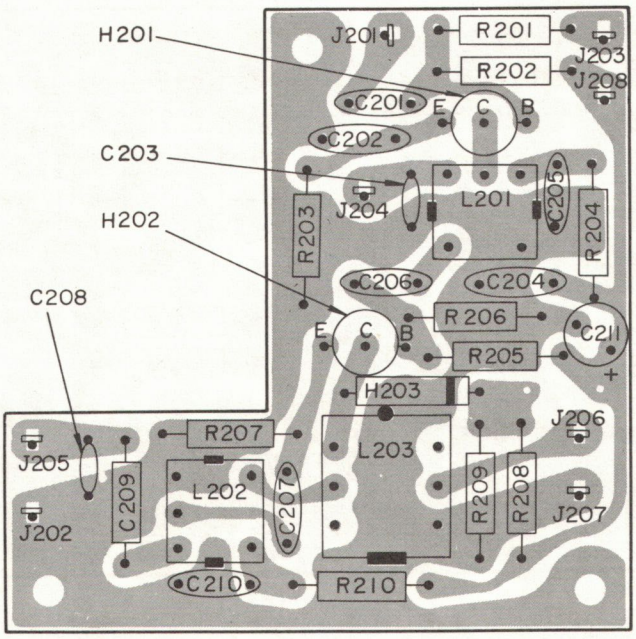

Figure 6 AM Front End Assembly P200 Component Locations

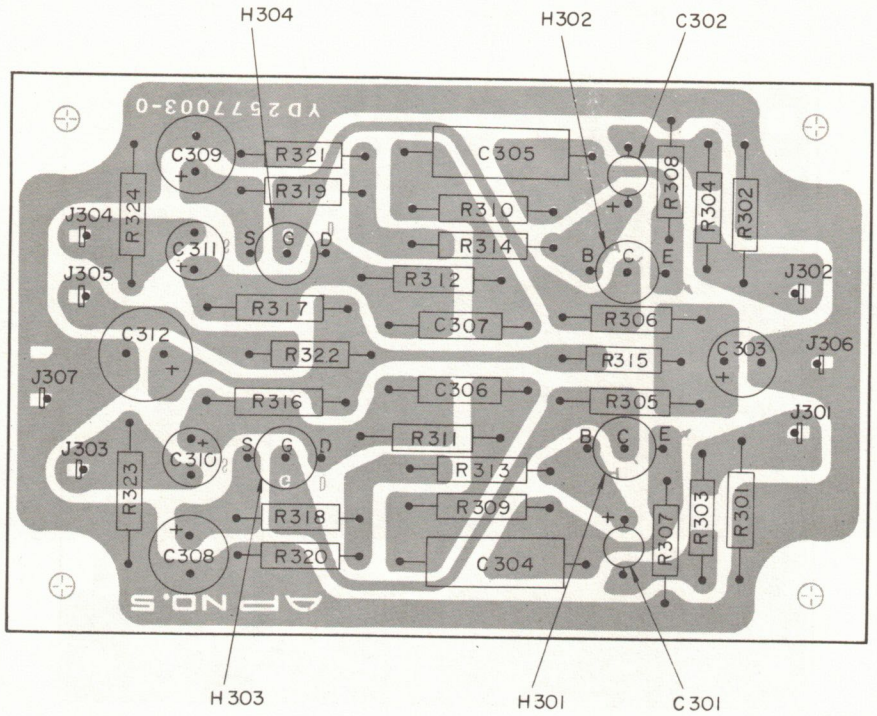

Figure 7 PHONO Amplifier Assembly P300 Component Locations

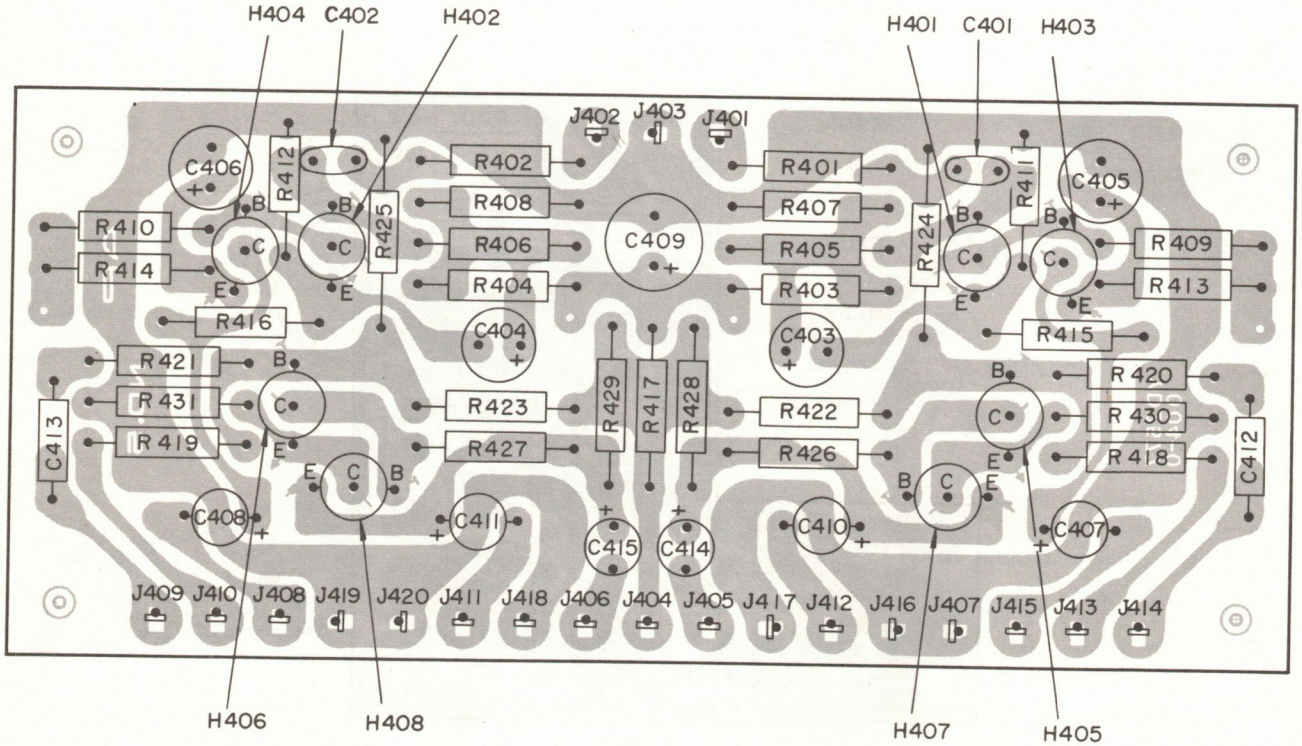

Figure 8 Tone and Pre Amplifier Assembly P400 Component Locations

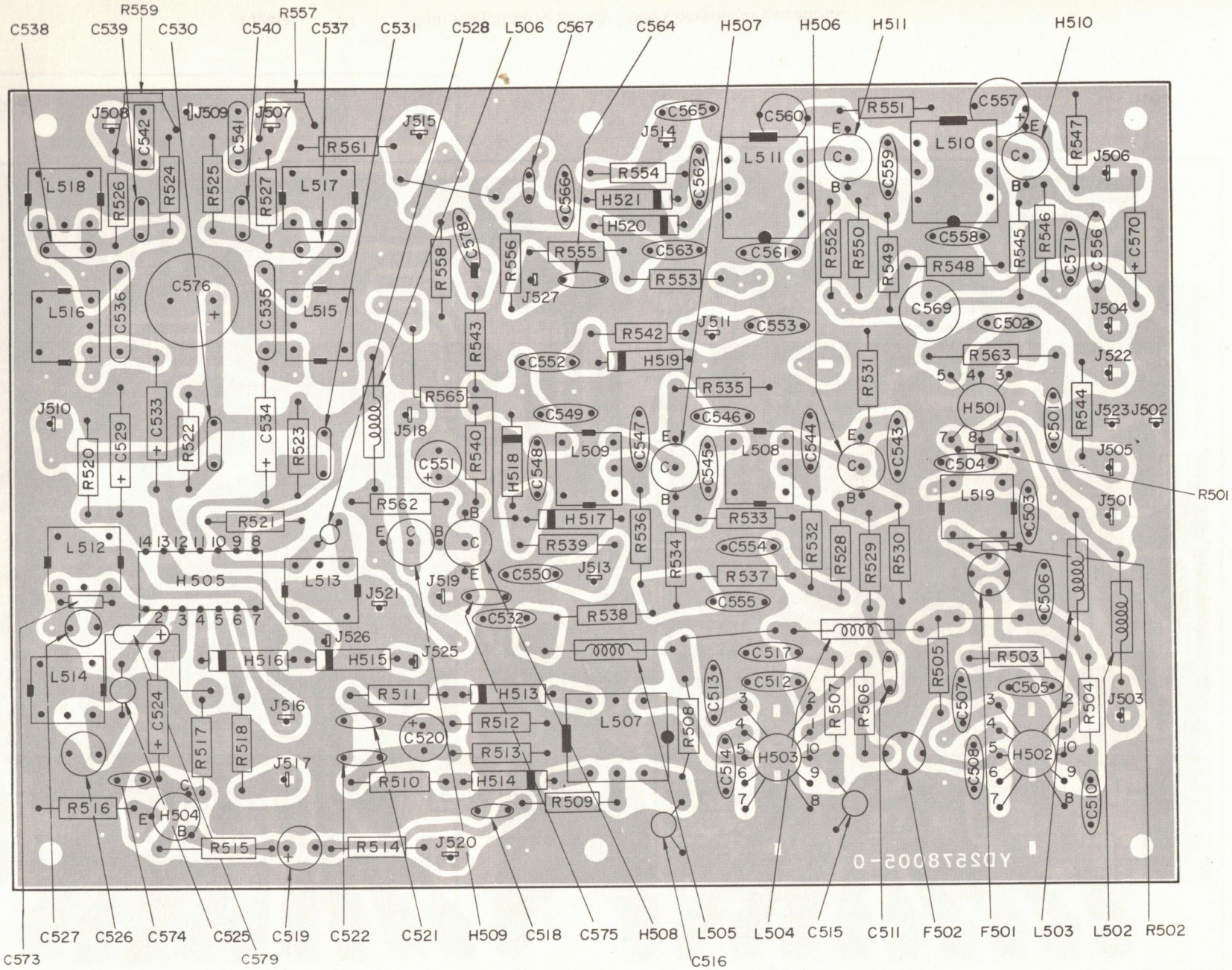

Figure 9 AM-FM IF and FM-MPX Demdulator Assembly P500 Component Locations

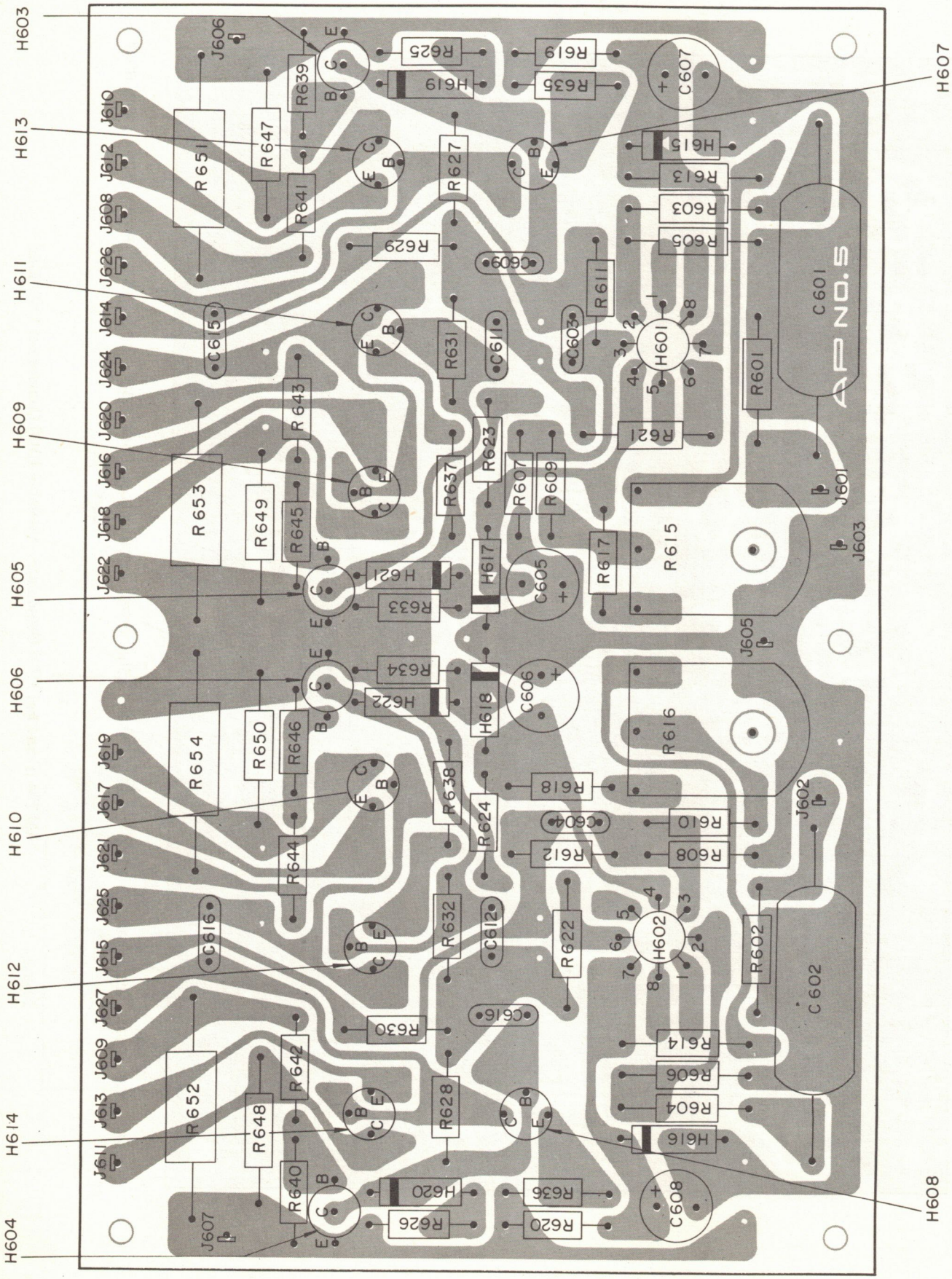

Figure 10 Main Amplifier Assembly P600 Component Locations

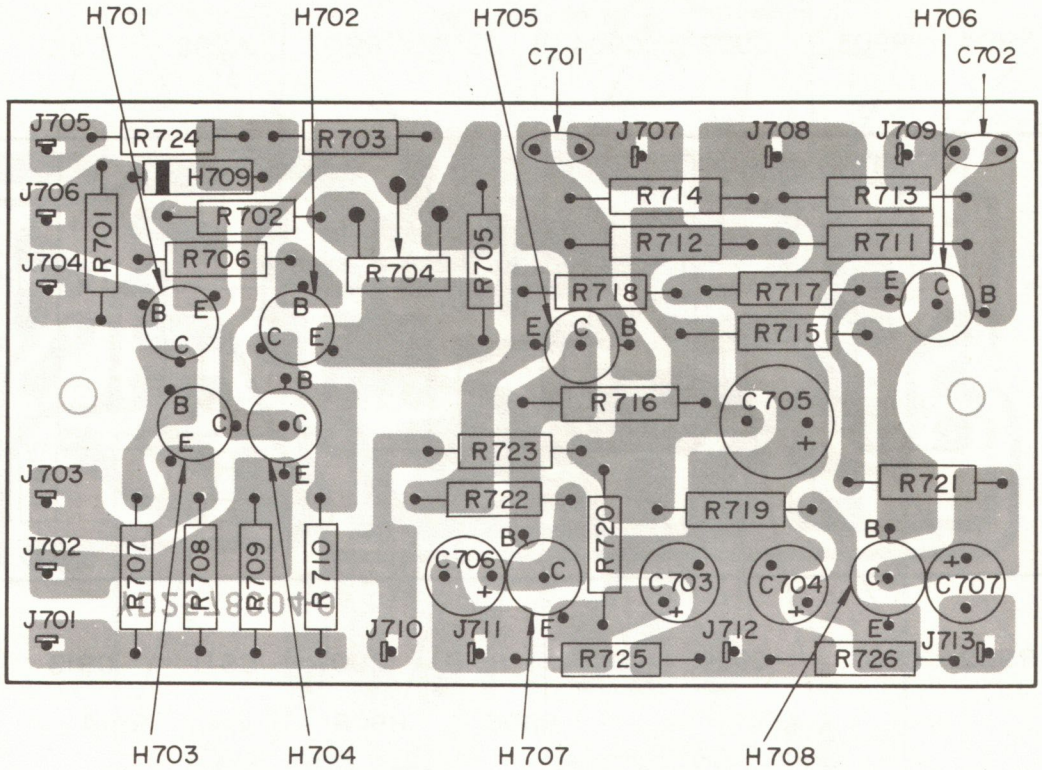

Figure 11 DC Amplifier and FM Audio Amplifier Assembly P700 Component Locations

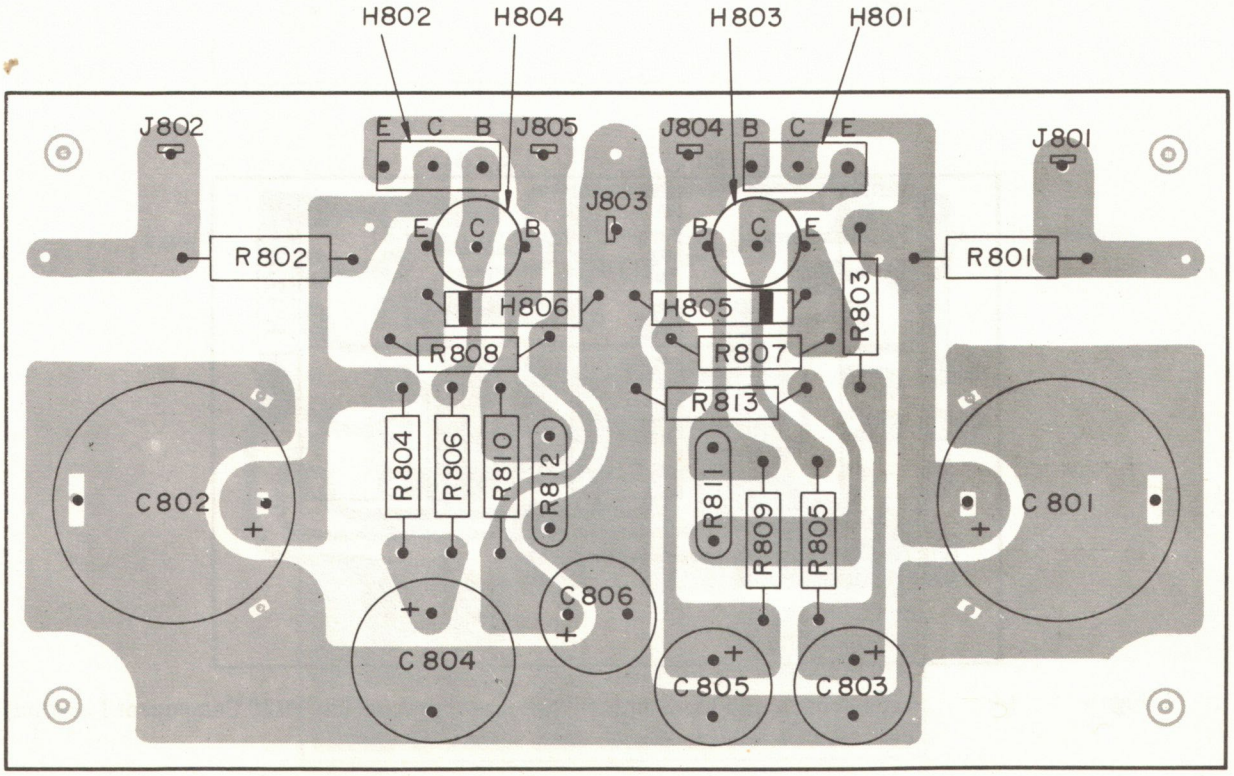

Figure 12 Regulated Power Supply Unit Assembly P800 Component Locations

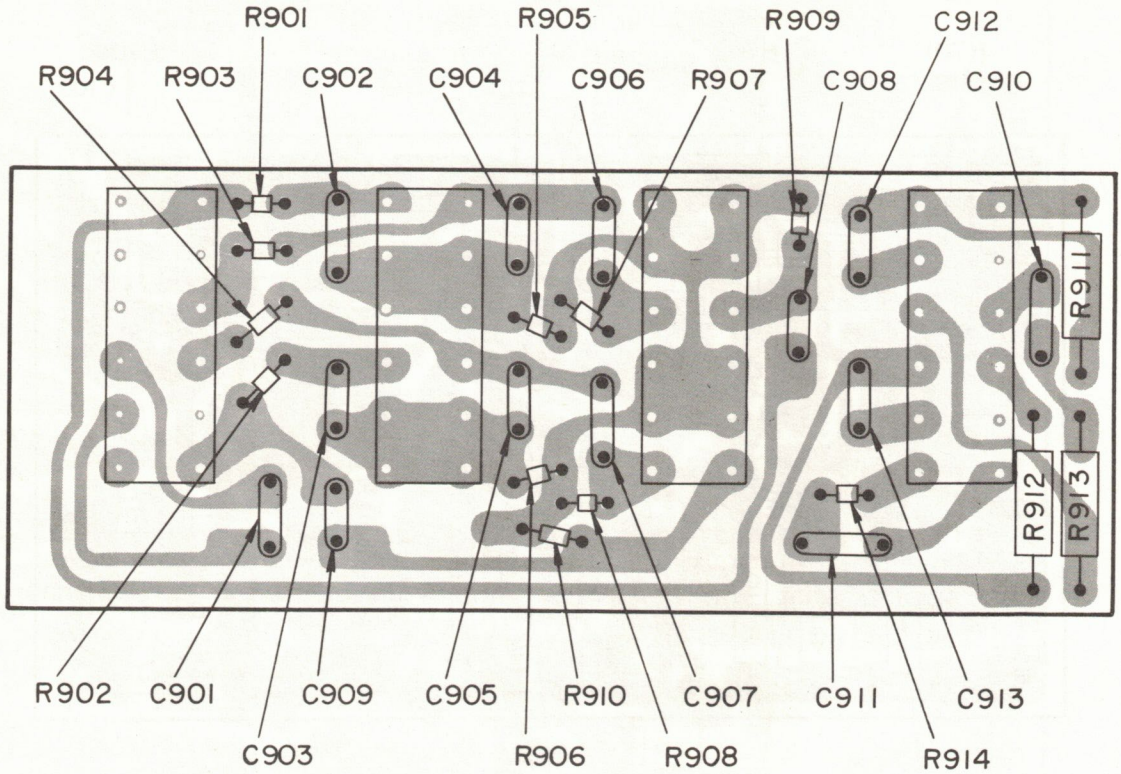

Figure 13 Hi Blend, Low Filter, Hi Filter and Loudness Switches Unit Assembly P900 Component Locations

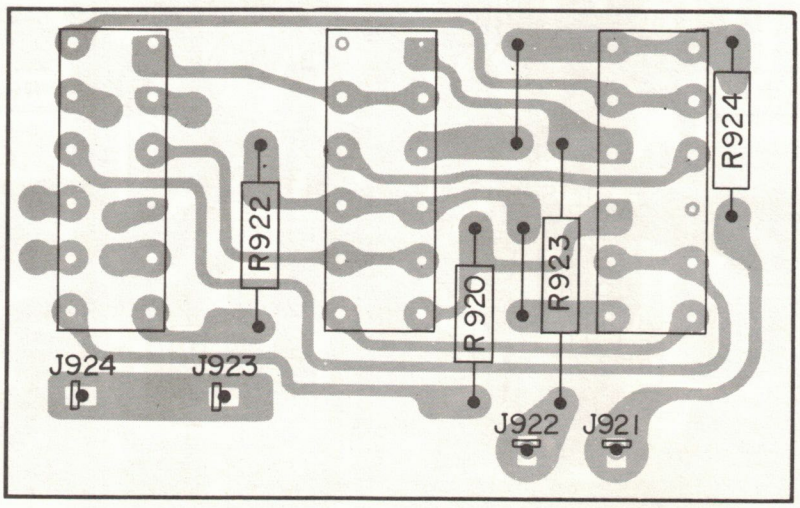

Figure 14 Tape Monitor and Mono in L.R. Switches Unit Assembly P920 Component Locations

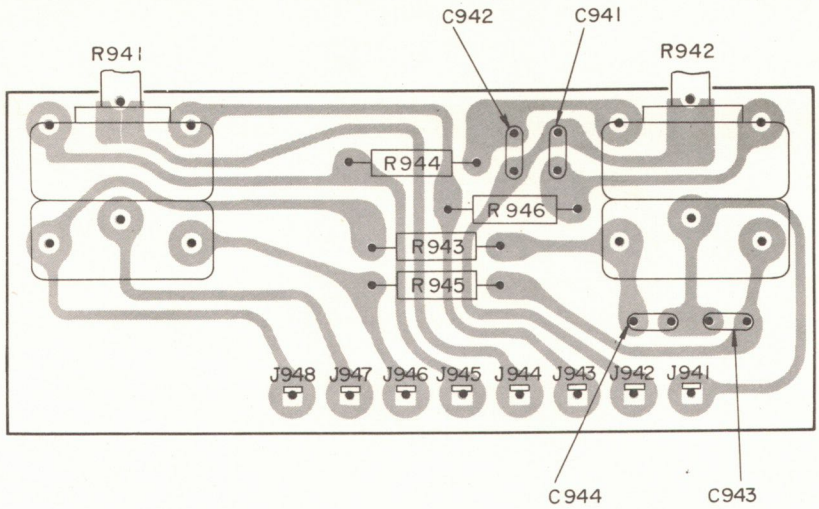

Figure 15 Tone Control Unit Assembly P940 Component Locations

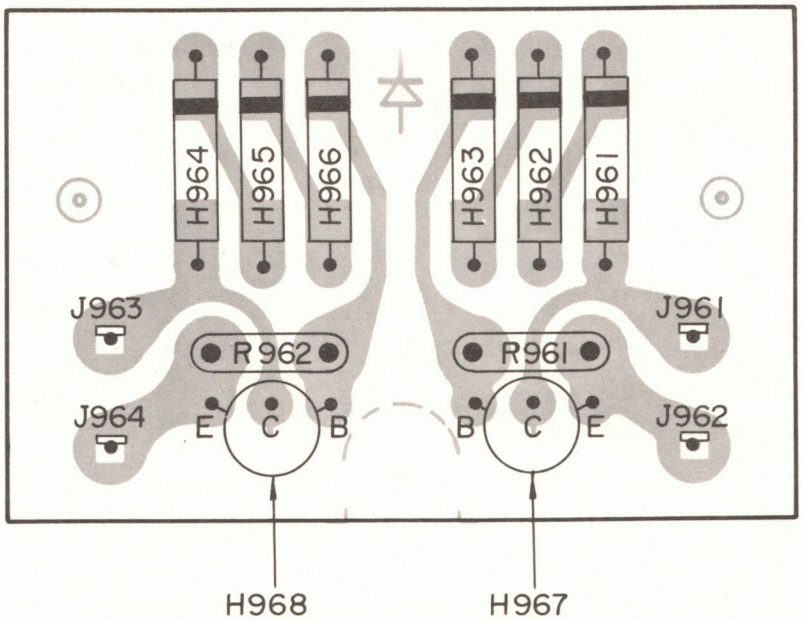

Figure 16 Temperature Compensation Unit Assembly P960 Component Locations

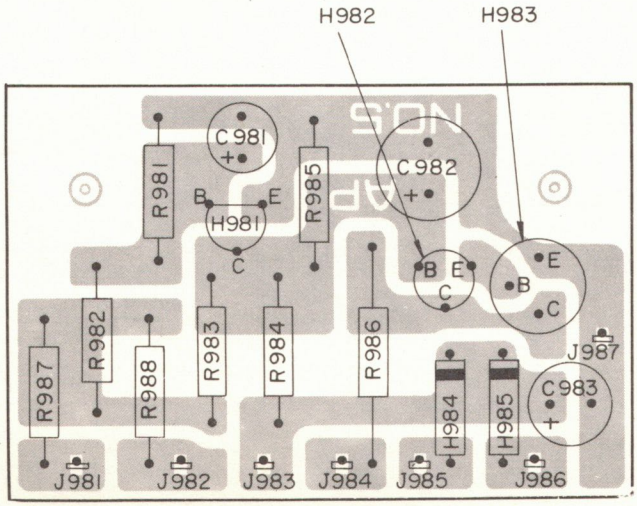

Figure 17 Speaker Protector Circuit Assembly P980 Component Locations

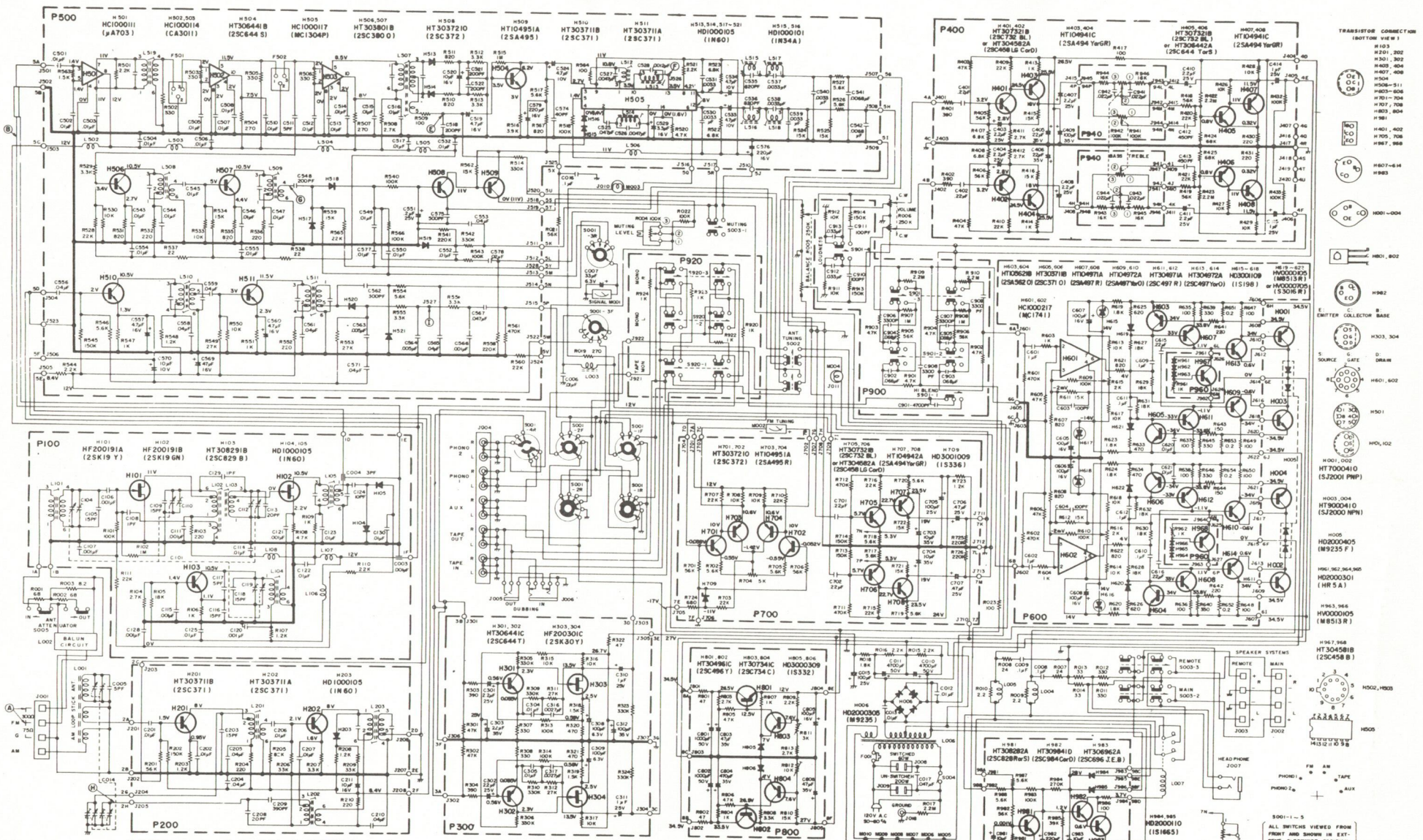

1. Voltages are measured at no signal with DC VTVM from common negative ground.
2. Voltages in parethesiss are values measured at 1KμV FM stereo signal applied. Stereo switch in stereo position.

SCHEMATIC DIAGRAM OF MODEL 22

1969-10-27
11-21