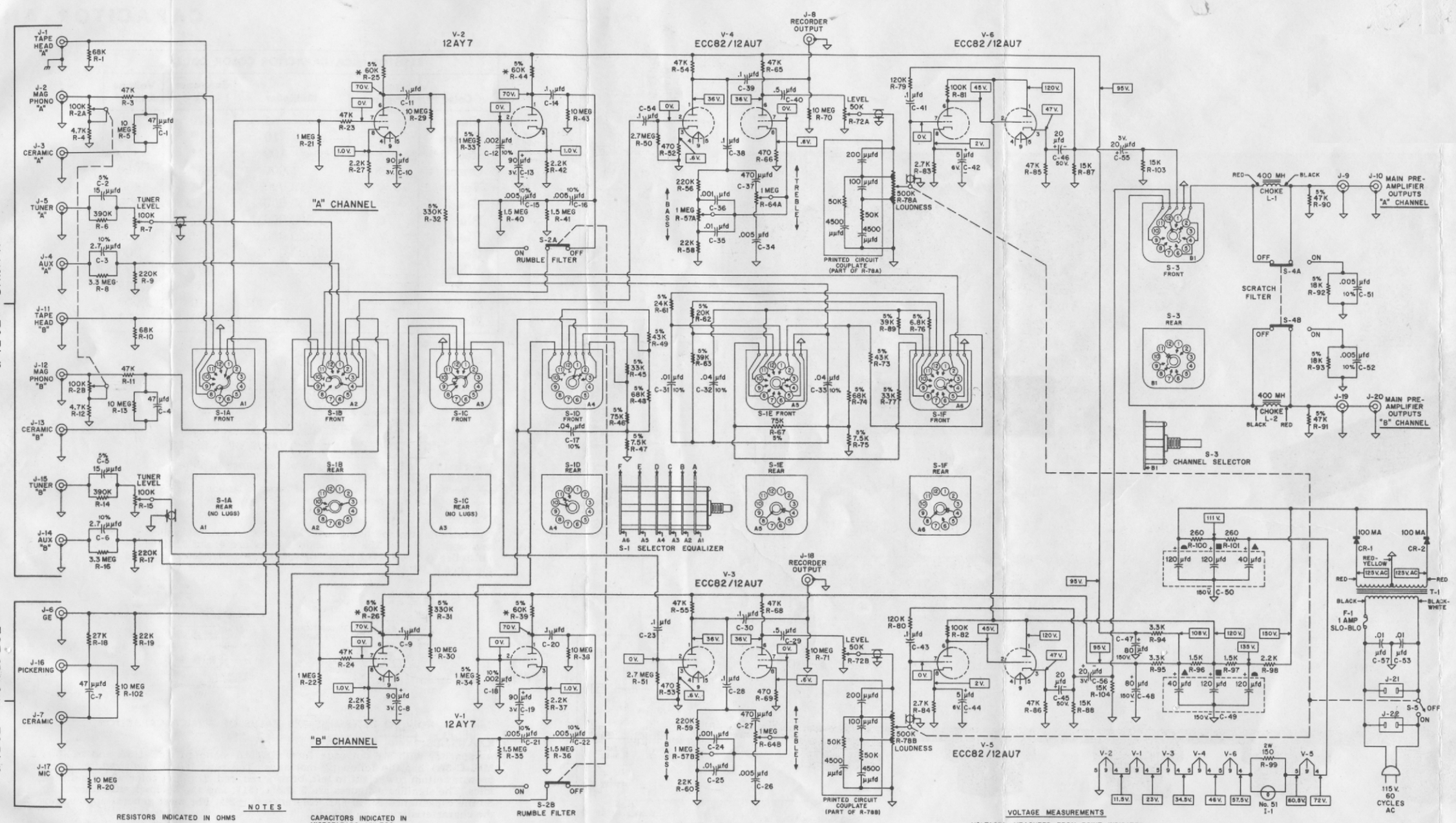

NOTES

RESISTORS INDICATED IN OHMS
K = 1,000 OHMS
MEG = 1,000,000 OHMS
* = DEPOSITED CARBON RESISTOR
RESISTORS ±10% UNLESS OTHERWISE SPECIFIED.

CAPACITORS INDICATED IN MICROFARADS UNLESS OTHERWISE SPECIFIED.
CAPACITORS ±20% UNLESS OTHERWISE SPECIFIED.
= COMMON GROUND (B−)
= CHASSIS GROUND

VOLTAGE MEASUREMENTS

VOLTAGES MEASURED FROM POINT INDICATED TO CHASSIS WITH A VTVM OR 20KΩ/V VOM.
TOLERANCE ±20%.
SELECTOR EQUALIZER S-1 IN MAXIMUM COUNTER-CLOCKWISE POSITION.
CHANNEL SELECTOR S-3 IN 'STEREO' POSITION.
ALL OTHER CONTROLS IN MAXIMUM COUNTER-CLOCKWISE POSITION.
NO SIGNAL INPUT.

FIGURE 17. SCHEMATIC DIAGRAM