KENWOOD

HI/FI STEREO COMPONENTS

SERVICE MANUAL

KT-5500
(KT-5550)

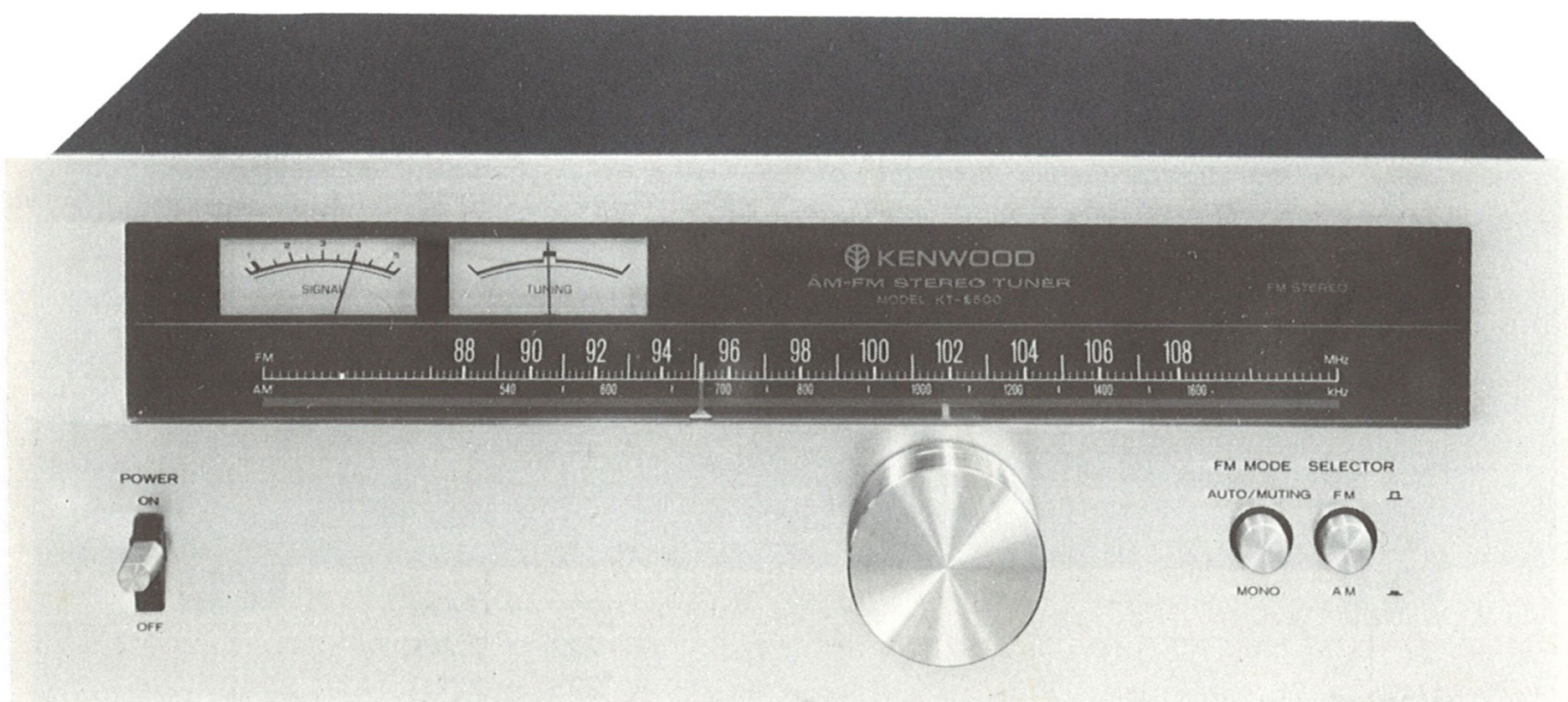

AM-FM STEREO TUNER

www.hifiengine.com

CONTENTS

EXTERNAL VIEW 3
INTERNAL VIEW 4
DIAL CORD STRINGING 4
BLOCK DIAGRAM 5
DESTINATIONS' PARTS LIST 6
PARTS LIST 7
ADJUSTMENT 8
PC BOARD 10
SCHEMATIC DIAGRAM 11
SPECIFICATIONS 12

Note 1:
The products are subject to modification in components and circuits in different countries and regions. This is because each products must be used under the best condition.
This manual provides information of modification based on the standard to the U.S. for the convenience of ordering associated components and parts.

U.S.A.	K
Canada	P
PX	U
Australia	X
Europe	W
England	T
Scandinavia	L
Other Areas	M
Audio Club (KT-5550)	M_2

Note 2:
If the associated transistors are replaced and the FM front end PC board ass'y is still out of order, then this PC board ass'y as a whole must be replaced. (In this case its terminals must not be damaged.)

Note 3:
Resistors except the special ones (example: cement, metal film, etc.) are not mentioned in PARTS LIST. Resistors not mentioned mean that they are carbon ones (1/4W or 1/8W). You should give an order for the carbon resistors according to the ways described as follows:
A carbon resistor's part number is example RD14BY 2E 222J

1. Kinds of the carbon resistor

RD14BY

RD14CY

2. Wattage

1/4W → 2E
1/8W → 2B

3. Resistance value

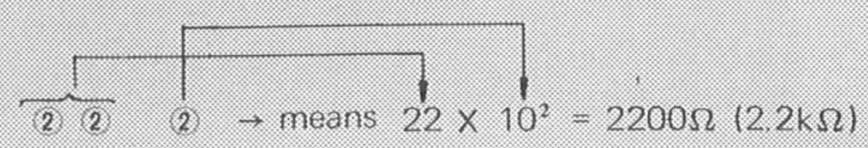

Significant figure Multiplier

Example:

221 → 220Ω
222 → 2.2kΩ
223 → 22kΩ
224 → 220kΩ
225 → 2.2MΩ

4. Tolerance

J = ±5% (Gold color)
K = ±10% (Silver color)

www.hifiengine.com

EXTERNAL VIEW

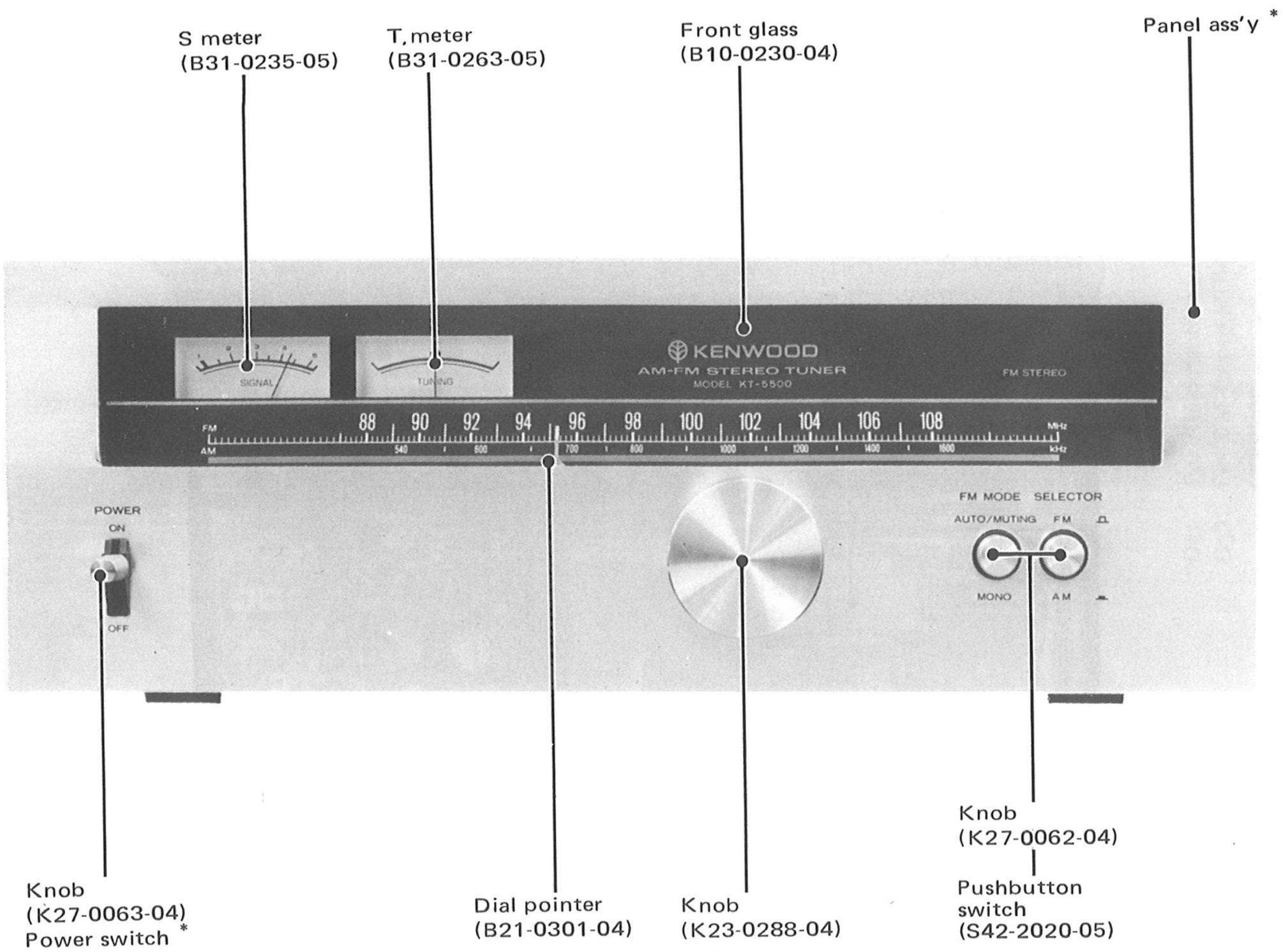

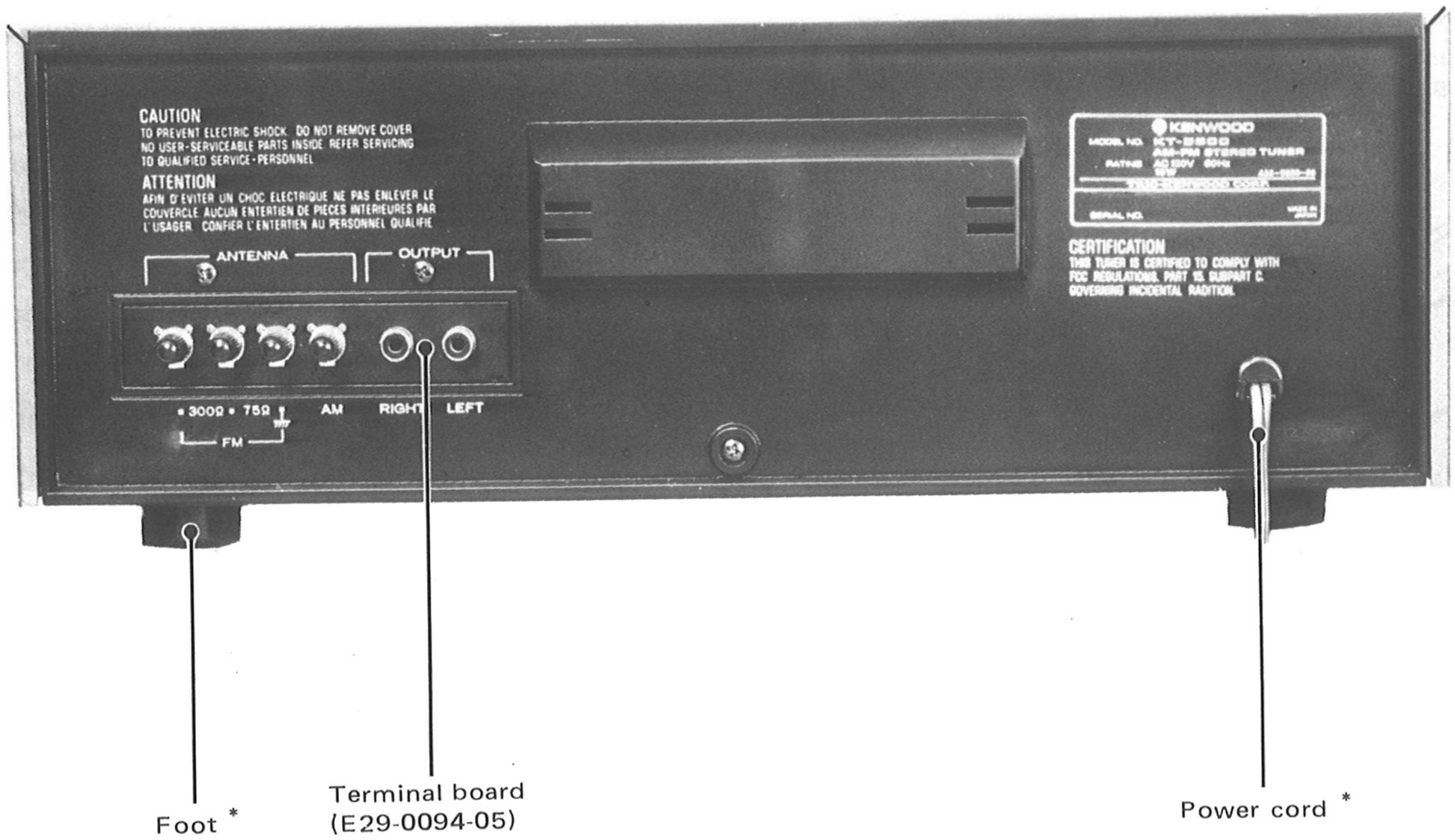

* Refer to DESTINATIONS' PARTS LIST.

www.hifiengine.com

INTERNAL VIEW/DIAL CORD STRINGING

When repairing the FM front end PC board ass'y interior, the terminals of this PC board ass'y must be handled carefully not to damage them.

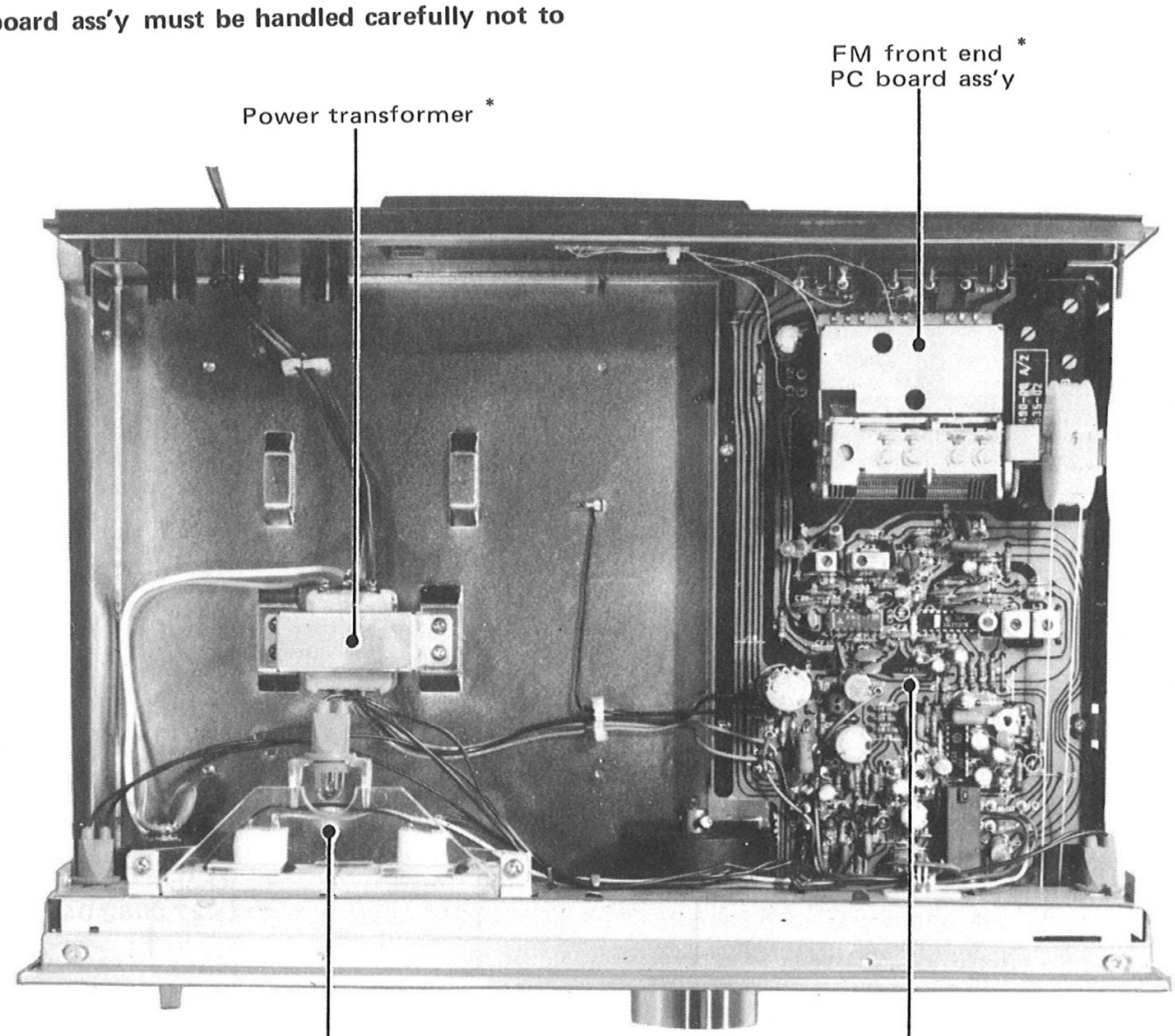

* Refer to DESTINATIONS' PARTS LIST.

DIAL CORD STRINGING

1. Fully close the variable capacitor.
2. Set the dial pulley as illustrated and fix it with 2 screws.
3. Tie the end of the dial cord at the dial spring, giving a margin of about 10 cm. Hook the spring on the boss.
4. Give half a turn of the dial cord to the dial pulley in the direction of "1" and wind it 2 turns around the dial shaft starting from its lower side. Then stretch the cord in the direction of "7".
5. Wind the cord 2 turns around the dial pulley in the direction of "1" and starting from the upper side of the pulley. Rigidly tie it with the margin cord (provided as described in 3. above) and release the dial spring from the boss.
6. Mount the dial pointer in position as illustrated. This setting should be checked by receiving a suitable broadcast station actually.

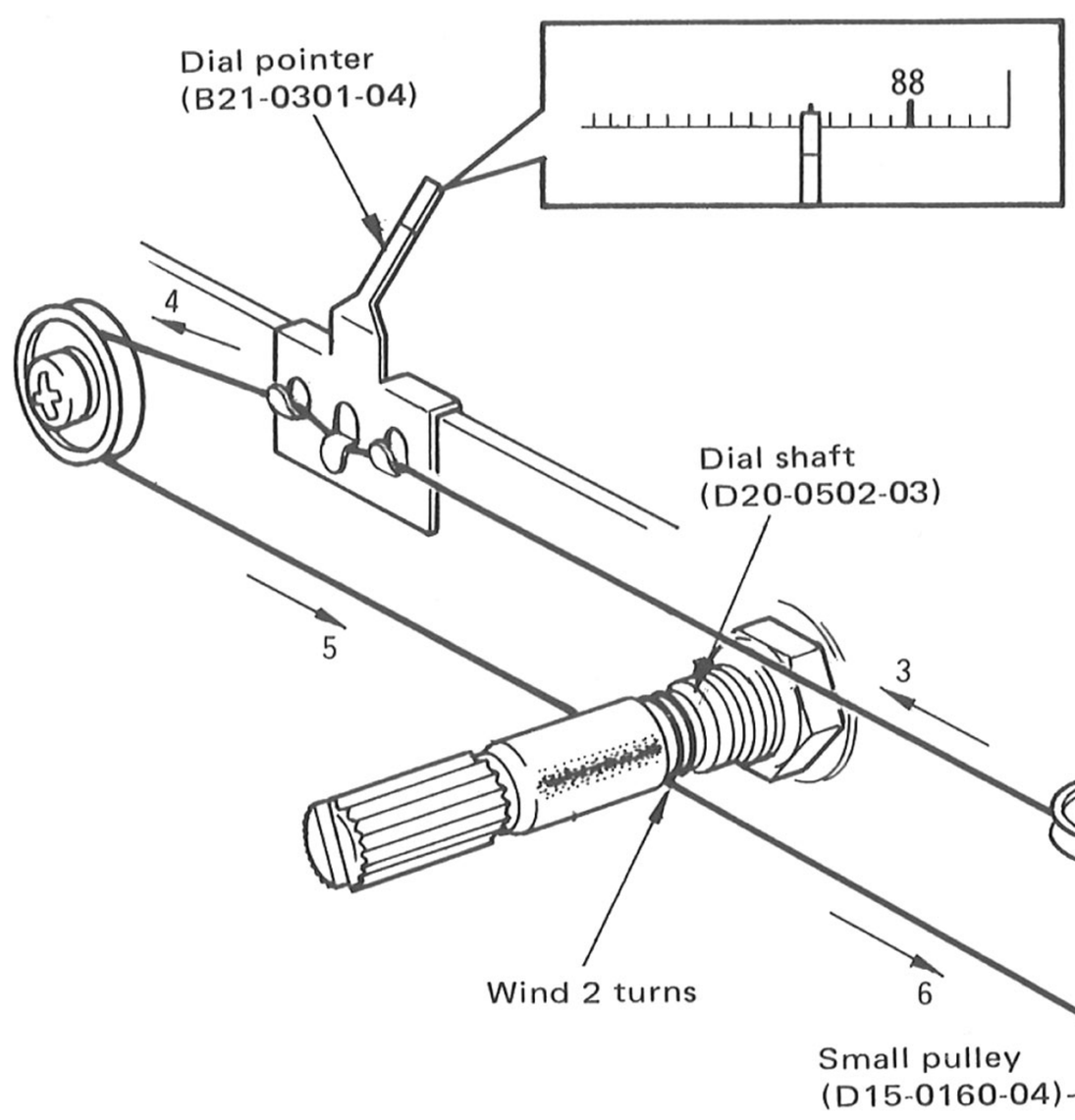

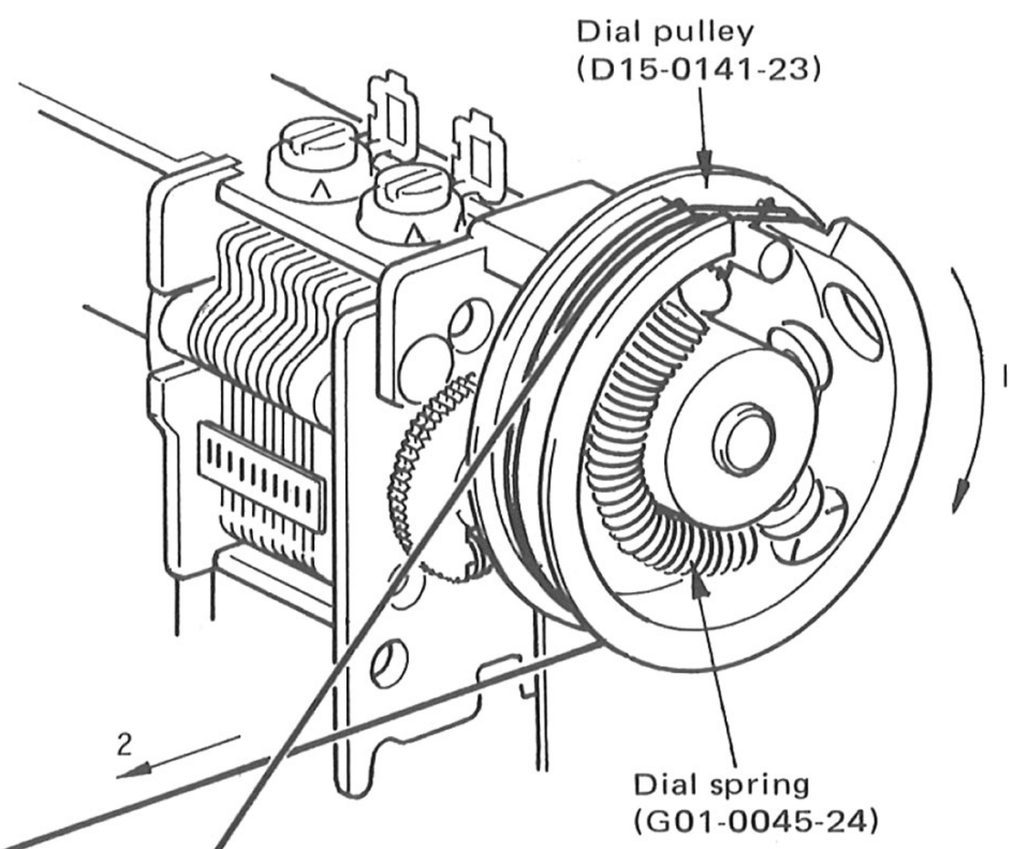

BLOCK DIAGRAM

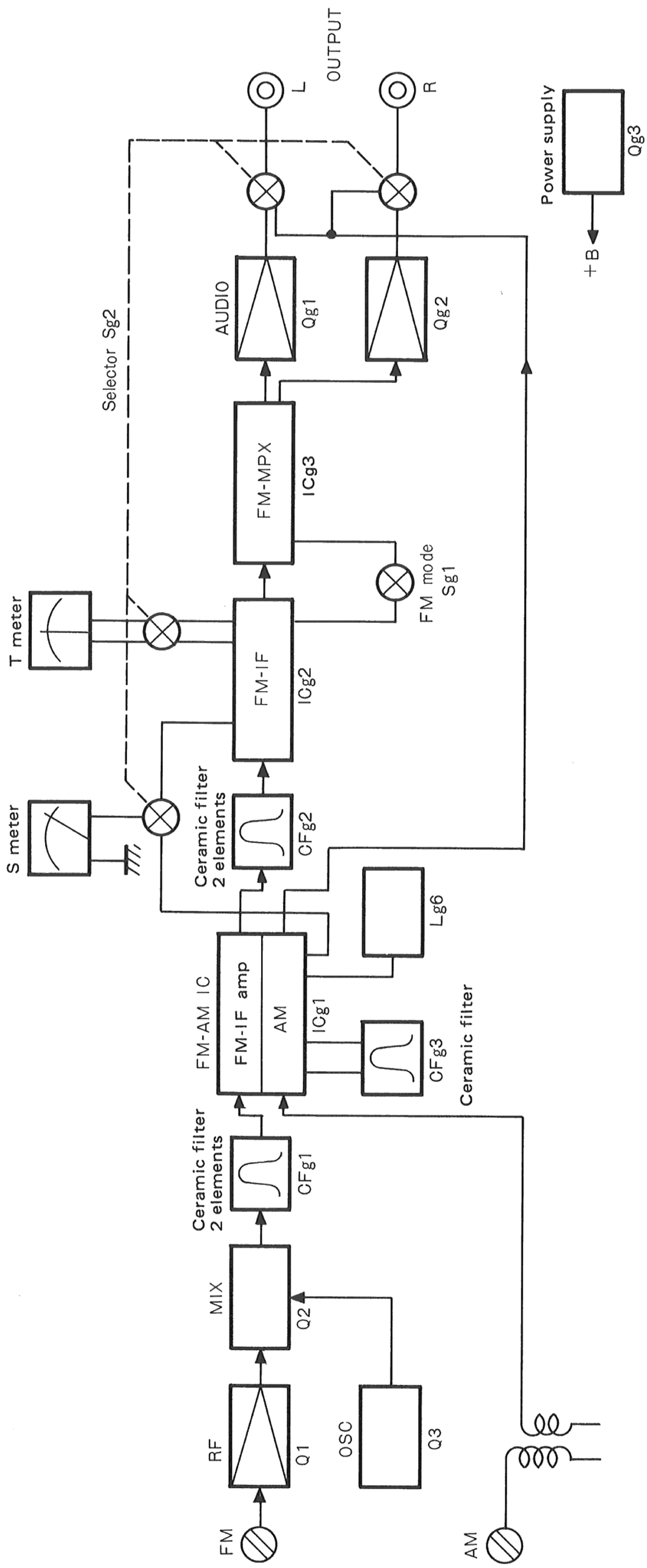

Dg1: For AM detection
Dg2: For FM forced MONO during AM reception
Dg3: For suspension of the HA1137W function during AM reception and prevention of reverse flow of +B from FM to AM
Dg5: For constant voltage
Dg6, 7: For positive rectification

www.hifiengine.com

☆ : New parts

Ref. No.	U.S.A. (K)	Canada (P)	PX (U)	Australia (X)	Europe (W)	Scandinavia (L)	England (T)	South Africa (S)	Other Area (M)	Audio Club (M_2)	Description
C1	C91-0001-05 or C90-0145-05	C91-0025-05	C91-0023-05	C91-0023-05	CK45E3D-103PMU	CK45E3D-103PMU	CK45E3D-103PMU	C91-0023-05	C91-0023-05	C91-0023-05	Ceramic or film capacitor 0.01μF
C2	–	–	–	–	CK45E3D-103PMU	CK45E3D-103PMU	CK45E3D-103PMU	–	–	–	Ceramic capacitor 0.01μF
R1	RC05GF2H-225M	RC05GF2H-225M	–	–	–	–	–	–	–	–	Carbon resistor 2.2MΩ ±20% 1/2W
–	L01-1421-05	L01-1421-05	L01-1427-05	L01-1427-05	L01-1424-05	L01-1424-05	L01-1427-05	L01-1427-05	L01-1427-05	L01-1427-05	Power transformer ☆
S1	S33-1006-05	S33-1006-05	S33-1007-05	S33-1007-05	S33-2032-05	S33-2032-05	S33-2032-05	S33-1007-05	S33-1007-05	S33-1007-05	Power switch
S2	–	–	S31-2001-05	S31-2001-05	S31-1006-05☆	S31-1006-05☆	–	S31-2001-05	S31-2001-05	S31-2001-05	Slide switch
–	A20-1206-03	A20-1206-03	A20-1206-03	A20-1206-03	A20-1206-03	A20-1206-03	A20-1206-03	A20-1206-03	A20-1206-03	A20-1207-03	Panel ass'y ☆
–	A30-0127-03	A30-0127-03	A30-0127-03	A30-0127-03	A30-0127-03	A30-0127-03	A30-0128-03	A30-0127-03	A30-0127-03	A30-0129-03	Dial back board ☆
–	B20-0409-04	B20-0409-04	B20-0409-04	B20-0409-04	B20-0409-04	B20-0409-04	B20-0409-04	B20-1410-04	B20-0409-04	B20-0409-04	Dial calibrations ☆
–	B46-0061-10	B46-0055-20	B46-0062-10 and B46-0063-00	–	–	–	B46-0060-00	–	–	B46-0062-10	Warranty card
–	B50-1668-00	B50-1669-00	B50-1668-00	B50-1668-00	B50-1668-00	B50-1668-00	B50-1670-00	B50-1668-00	B50-1668-00	B50-1690-00	Instruction manual
–	–	–	B59-0018-00	–	–	–	–	–	–	–	Kenwood service stations' list
–	–	–	D32-0075-04	D32-0075-04	D32-0075-04	D32-0075-04	–	D32-0075-04	D32-0075-04	D32-0075-04	Switch stopper
–	E22-0421-05	E22-0421-05	E22-0421-05	E22-0421-05	E22-0424-05	E22-0424-05	E22-0424-05	E22-0421-05	E22-0421-05	E22-0421-05	Lug-type terminal
–	E30-0181-05	E30-0181-05	E30-1007-05	E30-0185-05	E30-0459-05	E30-0459-05	E30-0602-05	E30-0602-05	E30-1007-05	E30-0459-05	Power cord
–	H01-1750-04	H01-1751-04	H01-1753-04	H01-1755-04	H01-1750-04	H01-1750-04	H01-1752-04	H01-1750-04	H01-1750-04	H01-1754-04	Carton case ☆
–	–	–	–	H12-0056-04	–	–	–	–	–	–	Buffer fixture
–	H20-0441-04	H20-0441-04	H20-0441-04	H20-0441-04	H20-0441-04	H20-0441-04	H20-0441-04	H20-0441-04	H20-0417-04	H20-0441-04	Polyethylene cover
–	–	–	–	–	–	–	–	–	H40-0004-04	–	Anti-rust paper
–	J02-0073-04	J02-0049-14	J02-0049-14	J02-0049-14	J02-0049-14	J02-0049-14	J02-0049-14	J02-0049-14	J02-0049-14	J02-0049-14	Foot × 4
–	J42-0072-05	J42-0072-05	J42-0072-05	J42-0074-05	J41-0017-05	J41-0017-05	J42-0074-05	J42-0074-05	J42-0072-05	J41-0017-05	Power cord bushing
–	–	–	–	–	–	J61-0038-05	–	–	–	–	Cord band
–	J61-0060-05 × 2	J61-0060-05 × 2	J61-0060-05 × 3	J61-0060-05 × 3	J61-0060-05 × 3	J61-0060-05 × 3	J61-0060-05 × 2	J61-0060-05 × 3	J61-0060-05 × 3	J61-0060-05 × 3	Wire cramper
–	X05-1490-11	X05-1490-11	X05-1490-11	X05-1490-61	X05-1490-61	X05-1490-61	X05-1490-61	X05-1490-41	X05-1490-11	X05-1490-11	Tuner PC board ass'y ☆

www.hifiengine.com

PARTS LIST

TOTAL

☆ : New parts

Ref. No.	Parts No.	Description	Remarks
—	A01-0330-03	Case	☆
—	B07-0220-04	Ring	
—	B07-0221-04	Escutcheon	☆
—	B10-0230-04	Front glass	☆
—	B19-0197-03	Lighting acryl resin board	
—	B21-0301-04	Dial pointer	
—	B30-0133-05	Pilot lamp (250 mm)	☆
—	B30-0134-05	Pilot lamp (300 mm)	☆
—	B30-0135-05	Pilot lamp (400 mm)	☆
—	B31-0235-05	S meter	
—	B31-0263-05	T meter	
—	D15-0141-23	Pulley	
—	D15-0160-04	Small pulley X 3	
—	D20-0502-03	Dial shaft	
—	E30-0505-05	Audio cord	
—	F99-0101-04	Slider	
—	G01-0045-24	Dial spring	
—	H10-1499-02	Polystyrene foamed fixture	
—	H10-1500-02	Polystyrene foamed fixture	
—	H25-0078-00	Instruction bag (230 X 315 mm)	
—	H25-0148-04	Polyethylene bag (110 X 230 mm)	
—	J19-0509-04	LED holder	
—	J90-0204-03	Dial pointer rail	
—	K23-0288-04	Knob (TUNING)	☆
—	K27-0062-04	Knob (PUSHBUTTON) X 2	☆
—	K27-0063-04	Knob (LEVER)	
—	N08-0125-05	Dress screw X 6	
—	T90-0089-05	AM bar antenna	☆
—	T90-0202-05	FM indoor antenna	

TUNER (X05-1490-)

Ref. No.	Parts No.	Description	Remarks
		CAPACITOR	
Cg1	CK45F1H103Z	Ceramic 0.01μF +80%,−20%	
Cg2, 3	CK45F1H223Z	Ceramic 0.022μF +80%,−20%	
Cg4, 5	CK45F1H103Z	Ceramic 0.01μF +80%,−20%	
Cg6	CE04W1HR47	Electrolytic 0.47μF 50WV	
Cg7	CC45SL1H101K	Ceramic 100pF ±10%	
Cg8, 9	CE04W1H010	Electrolytic 1μF 50WV	
Cg10	CK45F1H223Z	Ceramic 0.022μF +80%,−20%	
Cg11	CE04W1H010	Electrolytic 1μF 50WV	
Cg12, 13	CK45F1H473Z	Ceramic 0.047μF +80%,−20%	
Cg14	CE04W1E4R7	Electrolytic 4.7μF 25WV	
Cg15	CE04W1E100	Electrolytic 10μF 25WV	
Cg16, 17	CQ93M1H273J	Mylar 0.027μF ±5% (-11, -41)	
	CQ93M1H183J	Mylar 0.018μF ±5% (-61)	
Cg18	CQ93M1H473M	Mylar 0.047μF ±20%	
Cg19	CQ09S1H152J	Polystyrene 1500pF ±5%	
Cg20	CE04AW1HR47MCC	Electrolytic 0.47μF 50WV	
Cg21	CE04AW1HR22MCC	Electrolytic 0.22μF 50WV	
Cg22	CE04AW1HR33MCC	Electrolytic 0.33μF 50WV	
Cg23	CE04W1C101	Electrolytic 100μF 16WV	
Cg24	CC45PG1H180K	Ceramic 18pF ±10%	
Cg25	CQ09S1H152J	Polystyrene 1500pF ±5%	
Cg26, 27	CK45F1H103Z	Ceramic 0.01μF +80%,−20%	
Cg28	CK45F1H223Z	Ceramic 0.022μF +80%,−20%	
Cg29	CE04W1H010	Electrolytic 1μF 50WV	
Cg30	CK45F1H223Z	Ceramic 0.022μF +80%,−20%	
Cg31, 32	CK45F1H103Z	Ceramic 0.01μF +80%,−20%	
Cg33	CQ93M1H683M	Mylar 0.068μF ±20%	
Cg34, 35	CE04W1H2R2	Electrolytic 2.2μF 50WV	
Cg37	CE04W0J101	Electrolytic 100μF 6.3WV	
Cg39, 40	CQ93M1H332K	Mylar 3300pF ±10%	
Cg41, 42	CK45B1H271K	Ceramic 270pF ±10%	
Cg43, 44	CQ93M1H272M	Mylar 2700pF ±20%	
Cg45, 46	CS15E1V0R1M	Tantalum 0.1μF 35WV	
Cg47, 48	CE04W1A470	Electrolytic 47μF 10WV	
Cg49	CE04W1C101	Electrolytic 100μF 16WV	
Cg50	CE04W1C221	Electrolytic 220μF 16WV	
Cg51	CE04W1C471	Electrolytic 470μF 16WV	
Cg52	CE04W1E102	Electrolytic 1000μF 25WV	
Cg53	CE04AW1E3R3MCC	Electrolytic 3.3μF 25WV	
		RESISTOR	
Rg53	RS14GB3D100J	Metal film 10Ω ±5% 2W	
		SEMICONDUCTOR	
Qg1, 2	V01-0084-05	Transistor 2SA733(Q) or (R)	
Qg3	V03-0452-05	Transistor 2SC1735(E) or (D)	
ICg1	V30-0093-05	IC AN217BB	
ICg2	V30-0133-05	IC HA1137W	
ICg3	V30-0240-05	IC LA3350S-L6	
Dg1	V11-0051-05	Diode 1N60	
Dg2, 3	V11-0271-05	Diode 1S2076	
Dg5	V11-0387-05	Zener diode EQA01-12	
Dg6, 7	V11-0295-05	Diode W06B	
Dg8	V11-0404-05	LED GD4-207RD	
		INDUCTOR/IFT/COIL/FILTER	
Lg1	L40-2205-25	Inductor 22μH	
Lg2	L30-0302-15	FM IFT	
Lg3	L30-0303-05	FM IFT	
Lg4	L40-2292-44	Ferri-inductor 2.2μH	
Lg5	L32-0186-05	AM OSC	
Lg6	L30-0283-05	AM detection	
Lg7	L40-1092-44	Ferri-inductor 1μH	
CFg1, 2	L72-0052-05	FM ceramic filter	☆
CFg3	L72-0035-05	AM ceramic filter	
		POTENTIOMETER/SWITCH	
VRg1	R12-1021-05	Trimming 1kΩ SEPARATION	
VRg2	R12-2016-05	Trimming 5kΩ VCO	
Sg1, 2	S42-2020-05	Pushbutton switch	☆
		MISCELLANEOUS	
—	E29-0094-05	Terminal	☆
—	W02-0010-15	FM front end (-11, -61)	☆
—	W02-0011-15	FM front end (-41)	☆

www.hifiengine.com

ADJUSTMENT

INSTRUMENTS USED

Oscilloscope	OSC
AM signal generator	AM-SG
FM signal generator	FM-SG
Audio generator	AG
Solid state voltmeter	SSVM
FM multiplex generator	FM-MPX
Frequency counter	

NOTES FOR ADJUSTMENT

* Repeat tracking adjustments 2 or 3 times and finally confirm the result using respective local stations.
* The check points are shown on both circuit diagram and printed circuit board diagram.
* 0 dB = 1 μV
* FM tracking on lower side cannot be adjusted since a fixed coil is employed.

ORDER	ITEM	INSTRUMENT		TUNER SETTING	OUTPUT	ADJUSTMENT POINTS	ADJUSTMENT METHOD
		CONNECTION	SETTING				
FM SECTION							
1	IFT	Ⓐ	95 MHz 60 dB 1 kHz (Mod) 75 kHz (Dev)	95 MHz	Ⓑ	L1 (W02-0010-15) or (W02-0011-15)	Maximum optimum waveform, minimum distortion
2	DISCRI	–	–	–	T meter	Lg2	Meter indication in the center.
3		Ⓐ	95 MHz 60 dB 1 kHz (Mod) 75 kHz (Dev)	95 MHz	Ⓑ	Lg3	Maximum optimum waveform, minimum distortion
4	TRACKING	Ⓐ	106 MHz (Dev) 1 kHz (Mod) 75 kHz (Dev)	106 MHz	Ⓑ	TC1~3	Maximum optimum waveform
5	VCO	Ⓐ	95 MHz 60 dB 0 (Dev)	95 MHz	Ⓒ	VRg2	Adjusted to 19 kHz ±50 Hz
6	SEPARATION	Ⓓ	FM-MPX: SELECTOR L or R 1 kHz (Mod) FM-SG: 95 MHz 60 dB 68.25 kHz (Dev)	95 MHz	Ⓑ	VRg1	Minimum output. L and R are reversed and the same adjustment is performed. If any difference is found, the output levels are adjusted to the average value.
AM SECTION							
1	IF	Ⓔ	1000 kHz 400 Hz 30%(Mod) 100 dB	1000 kHz	Ⓑ	CFg3, Lg6	Maximum optimum waveform, minimum distortion
2	TRACKING	Ⓔ	600 kHz 400 Hz 30%(Mod) 100 dB	600 kHz	Ⓑ	Lg5 Bar antenna	Maximum optimum waveform, minimum distortion
3			1400 kHz 400 Hz 30%(Mod) 100 dB	1400 kHz		TC4, 5	

www.hifiengine.com

ADJUSTMENT

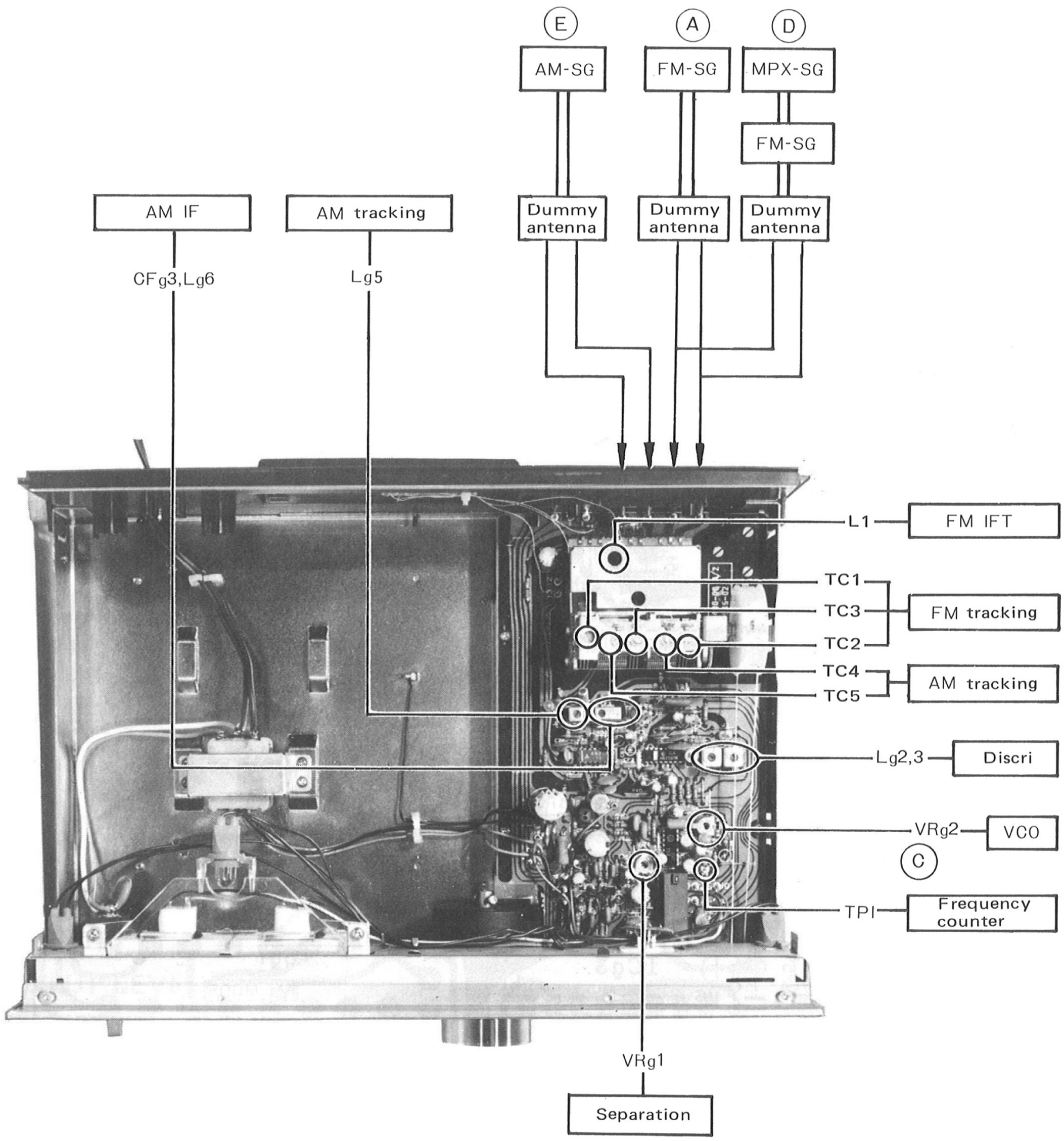
E
A
D
AM-SG
FM-SG
MPX-SG
FM-SG
AM IF
AM tracking
Dummy antenna
Dummy antenna
Dummy antenna
CFg3,Lg6
Lg5
L1
FM IFT
TC1
TC3
TC2
FM tracking
TC4
TC5
AM tracking
Lg2,3
Discri
VRg2
VCO
C
TPI
Frequency counter
VRg1
Separation

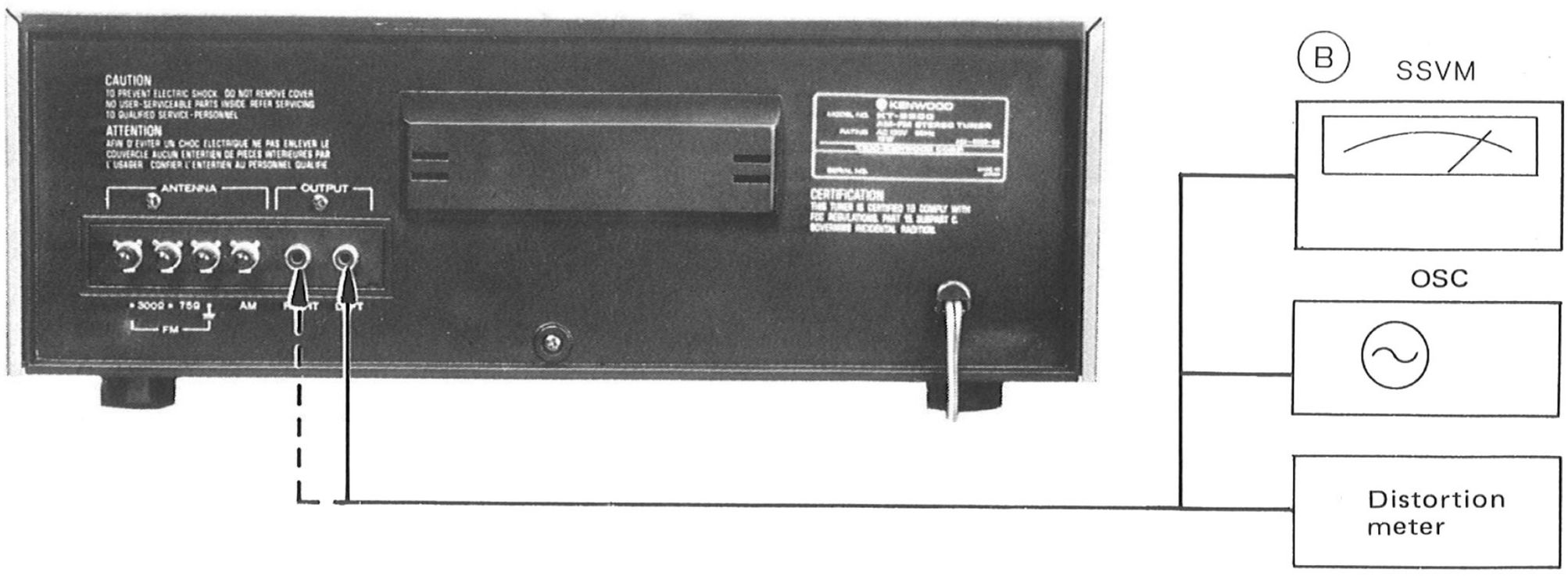
CAUTION
ATTENTION
ANTENNA
OUTPUT
KENWOOD
CERTIFICATION
B
SSVM
OSC
Distortion meter

PC BOARD

▼ TUNER (X05-1490-11)

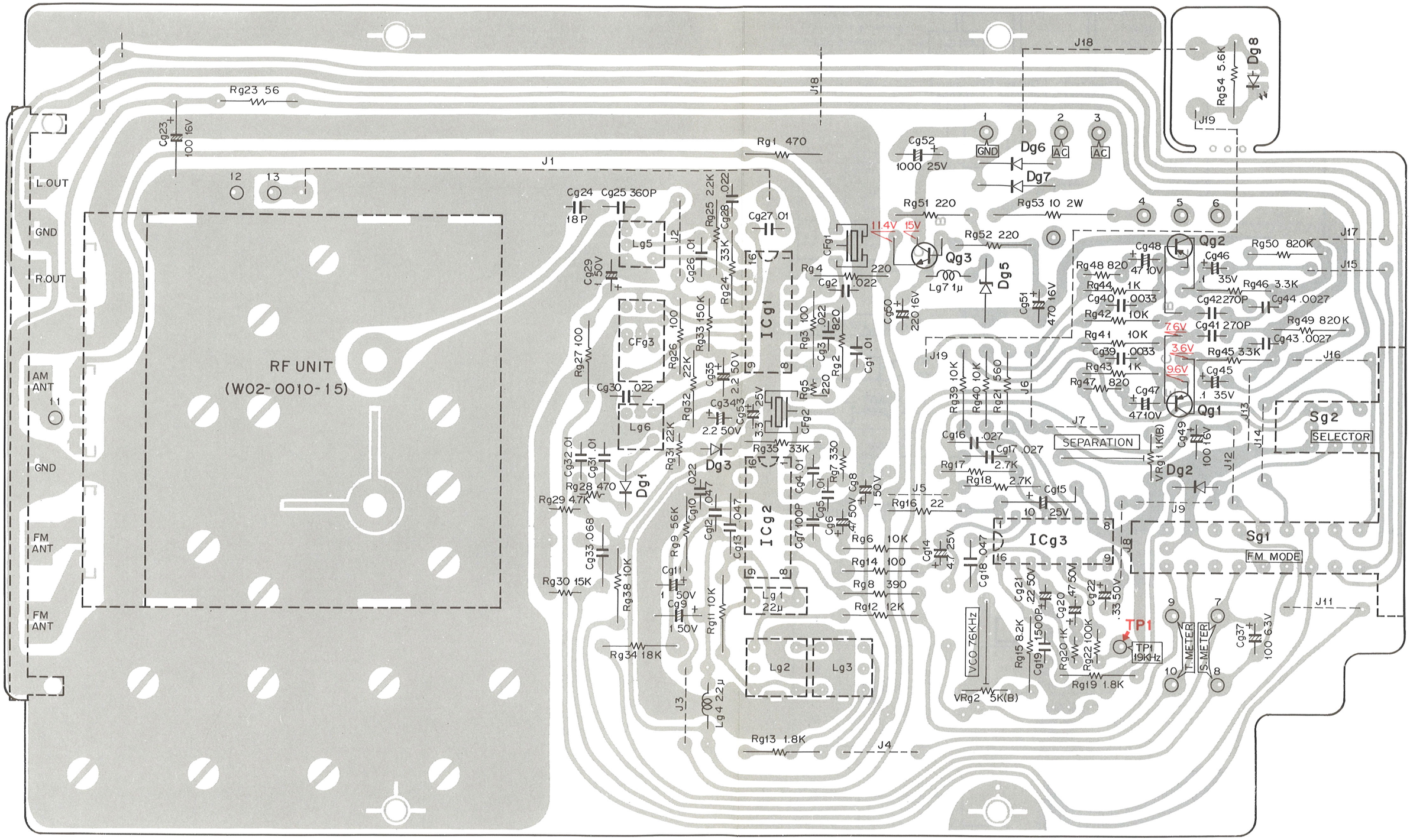

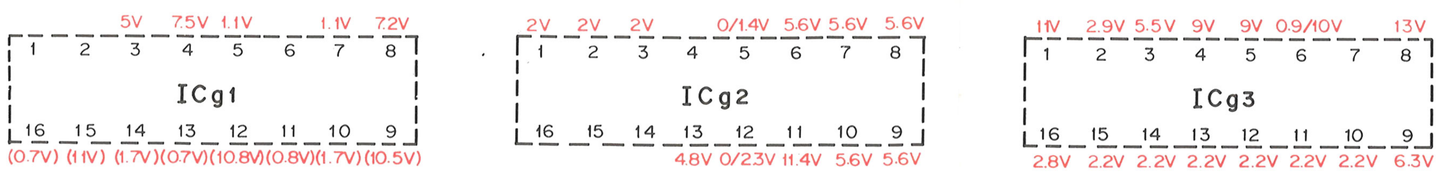

If the associated transistors are replaced and the FM front end PC board ass'y is still out of order, then this PC board ass'y as a whole must be replaced. (In this case its terminals must not be damaged.)

SCHEMATIC DIAGRAM

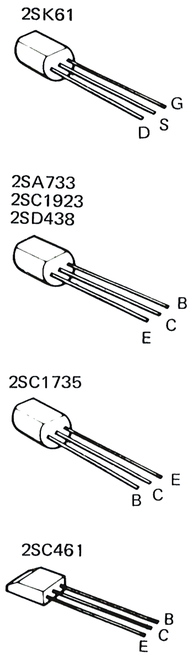

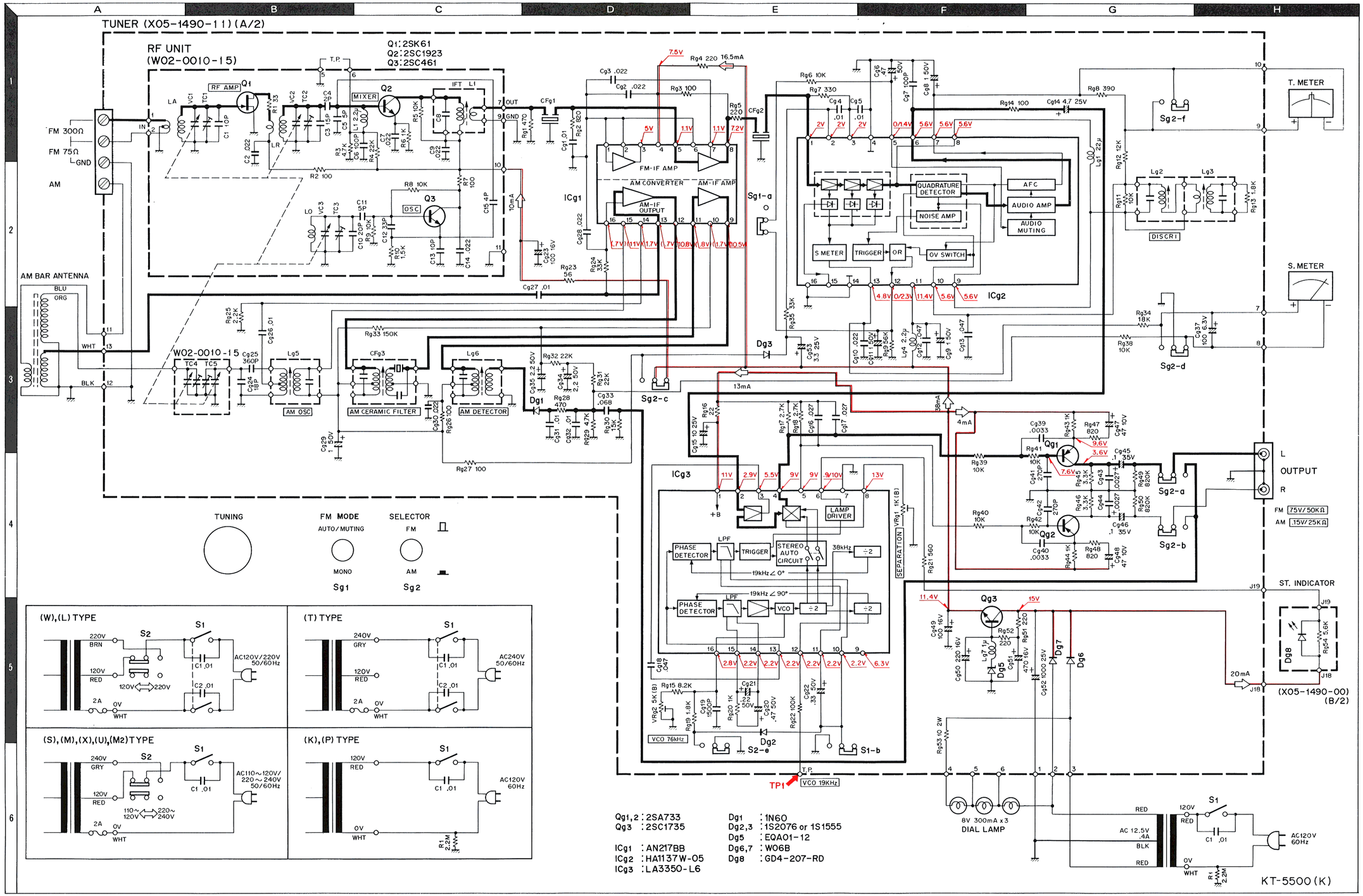

Semiconductor	Substitutions
2SK61	—
2SA733	2SA640
2SC461	2SC710
2SC1735	2SD438MP
2SC1923	—
AN217BB	—
HA1137W-05	—
LA3350-L6	—

Qg1,2 : 2SA733
Qg3 : 2SC1735

ICg1 : AN217BB
ICg2 : HA1137W-05
ICg3 : LA3350-L6

Dg1 : 1N60
Dg2,3 : 1S2076 or 1S1555
Dg5 : EQA01-12
Dg6,7 : W06B
Dg8 : GD4-207-RD

DC voltages to the chassis are reference values obtained from measurements with a 20 kΩ/V circuit tester.

——— voltages during FM stereo performance

( ) voltages during AM performance

SPECIFICATIONS

FM TUNER SECTION

Usable Sensitivity		10.8 dBf, (1.9 μV at 75 ohms)
50 dB Quieting Sensitivity	**(Mono)**	17.2 dBf, (4.0 μV)
	(Stereo)	38.3 dBf, (45 μV)
Signal to Noise Ratio at 65 dBf:		
	(Mono)	72 dB
	(Stereo)	68 dB
Total Harmonic Distortion at 65 dBf:		
	(Mono)	0.15% at 1,000 Hz
	(Stereo)	0.2% at 1,000 Hz
Frequency Response		30 to 15,000 Hz +0.2 dB, −2 dB
Capture Ratio		1.0 dB
Alternate Channel Selectivity		60 dB
Spurious Response Ratio		80 dB
Image Response Ratio		50 dB
IF Response Ratio (Balanced)		90 dB
AM Suppression Ratio		65 dB
Stereo Separation		45 dB at 1,000 Hz
		35 dB 50 to 15,000 Hz
Sub Carrier Product Ratio		40 dB
Antenna Impedance		300 ohms balanced & 75 ohms unbalanced
FM Frequency Range		88 MHz to 108 MHz

AM TUNER SECTION

Usable Sensitivity	20 μV
Signal to Noise Ratio	50 dB at 1 mV input
Image Rejection	45 dB
Total Harmonic Distortion	0.5%

OUTPUT LEVEL

FM (1 kHz 100% Mod)	0.7 V, 5.6 kohms
AM (400 Hz 30% Mod)	0.22 V, 5.6 kohms

GENERAL

Power Requirement		60 Hz 120 V (U.S.A. & Canada Model)
		or 50/60 Hz 110–120 V/220–240 V
Power Consumption		15 watts
Dimension		W 14-31/32" (380 mm)
		H 5-1/2" (140 mm)
		D 11-7/16" (290 mm)
Weight	**(Net)**	10 lbs. (4.5 kg)
	(Gross)	13.4 lbs. (6.0 kg)

www.hifiengine.com

KENWOOD ELECTRONICS,INC.

■1315 E.WATSONCENTER RD.CRRSON,CALIFORNIA 90745 U.S.A.
■75 SEAVIEW DRIVE SECAUCUS,NEW JERSEY 07094 U.S.A.

TRIO-KENWOOD ELECTRONICS N.V.

■LEUVENSESTEENWEG 184,B-1930 ZAVENTEM, BELGIUM.

TRIO-KENWOOD ELECTRONICS GmbH.

■6056 HEUSENSTAMM, RUDOLF, BRAAS-STR. 20, WEST GERMANY.

TRIO-KENWOOD FRANCE S.A.

■5, BOULEVARD NEY 75018 PARIS, FRANCE.

TRIO-KENWOOD (AUSTRALIA)PTY, LTD.

■30 WHITING ST, ARTARMON N.S.W. 2064, AUSTRALIA.

TRIO-KENWOOD CORPORATION

■3-6-17 AOBADAI, MEGURO-KU, TOKYO, JAPAN.

©1977-10 PRINTED IN JAPAN B51-0472-00 (T) 3,660

www.hifiengine.com