KENWOOD

HI/FI STEREO COMPONENTS

SERVICE MANUAL

KD-4100
(KD-4100R)

FULL AUTOMATIC DIRECT- DRIVE TURNTABLE

www.hifiengine.com

EXTERNAL AND INTERNAL VIEW

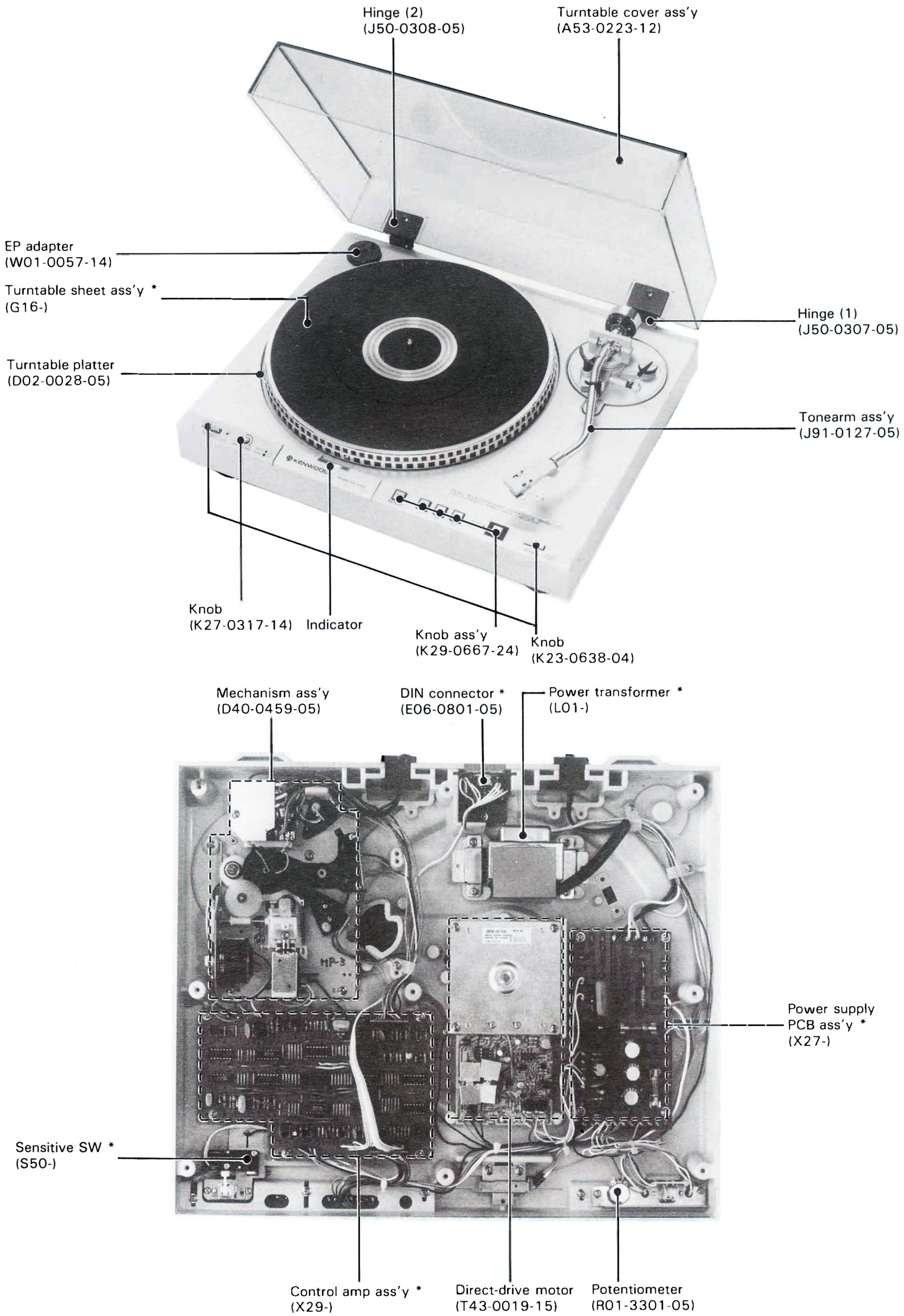

* Refer to Parts list.

BLOCK DIAGRAM / DISASSEMBLY FOR REPAIR

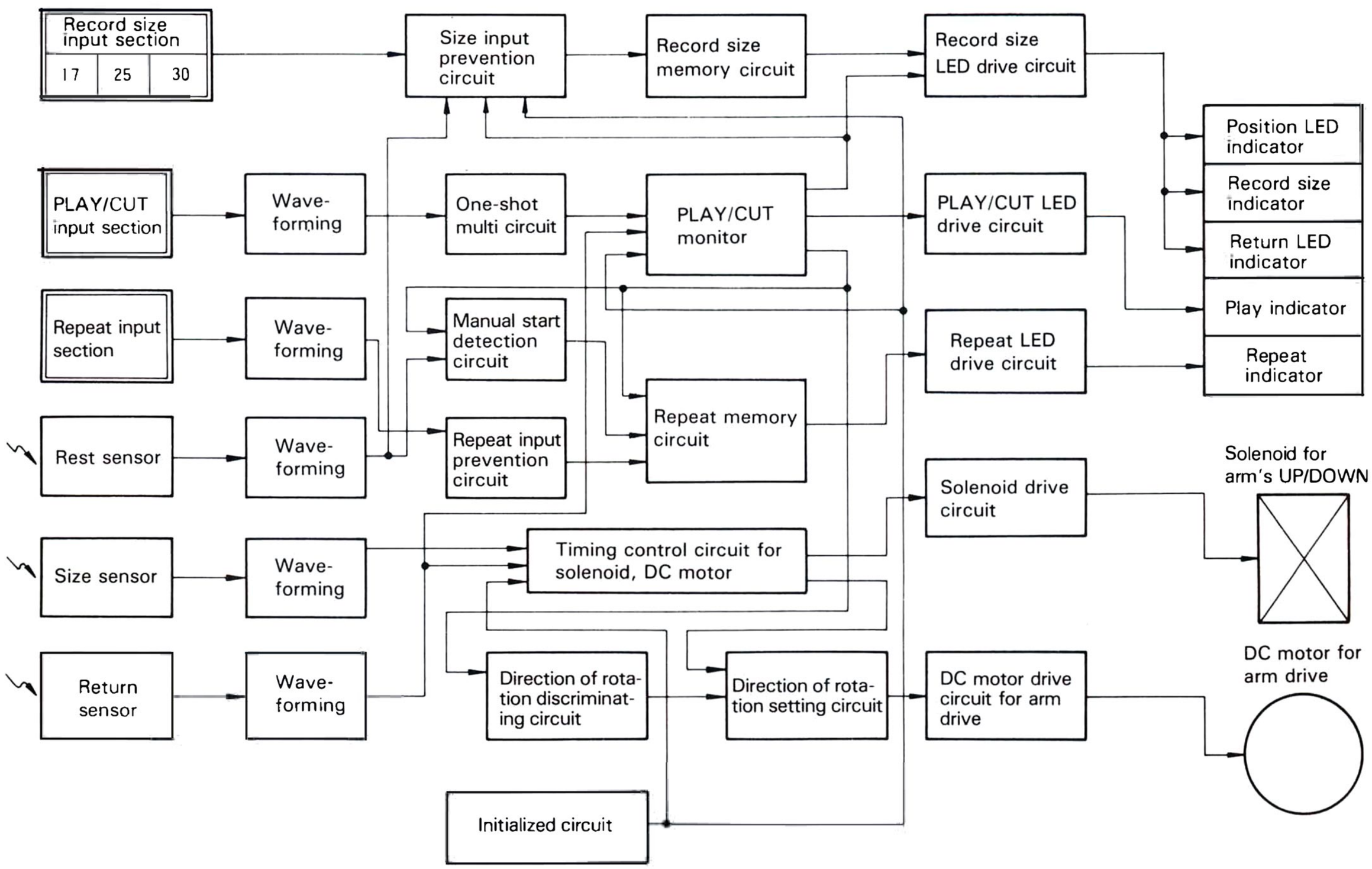

DISASSEMBLY FOR REPAIR

Disassembling auto mechanism and tonearm-related parts

1. Remove the shield plate retaining screw.
2. Remove the repeater PCB retaining screw.
3. Remove the mounting hardware.
4. Remove the search arm retaining screws.
5. Remove the auto mechanism retaining ass'y retaining screws.

Caution: The lead wire from the tonearm is soldered to the intermediate plate.

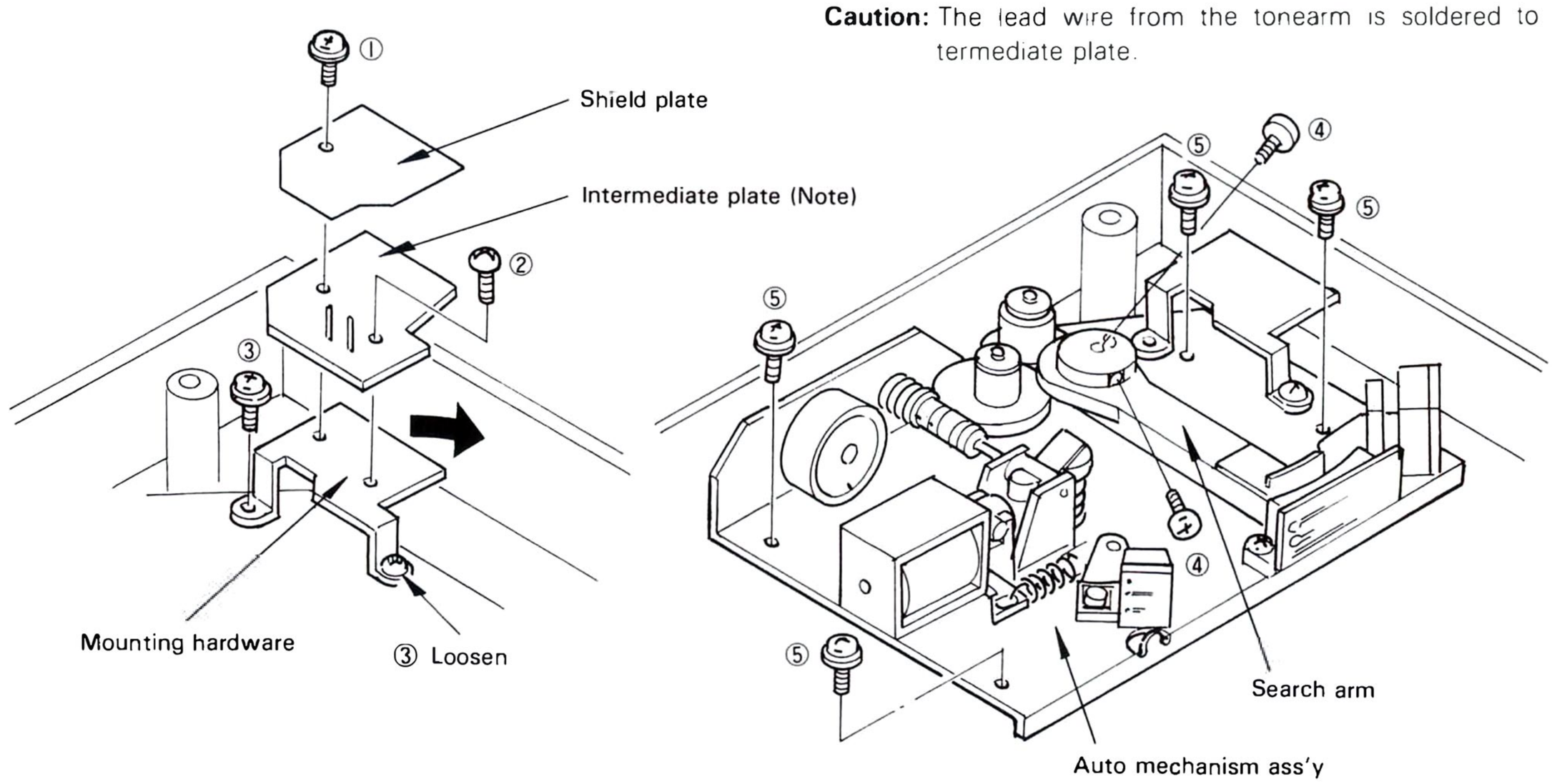

<Disassembling the auto mechanism>

www.hifiengine.com

ADJUSTMENT

1. Installing the start pointer and return holder
Install the start pointer and return holder so that the cross cut-off of the point adjuster is aligned with the center line passing through the rotational center as shown below.

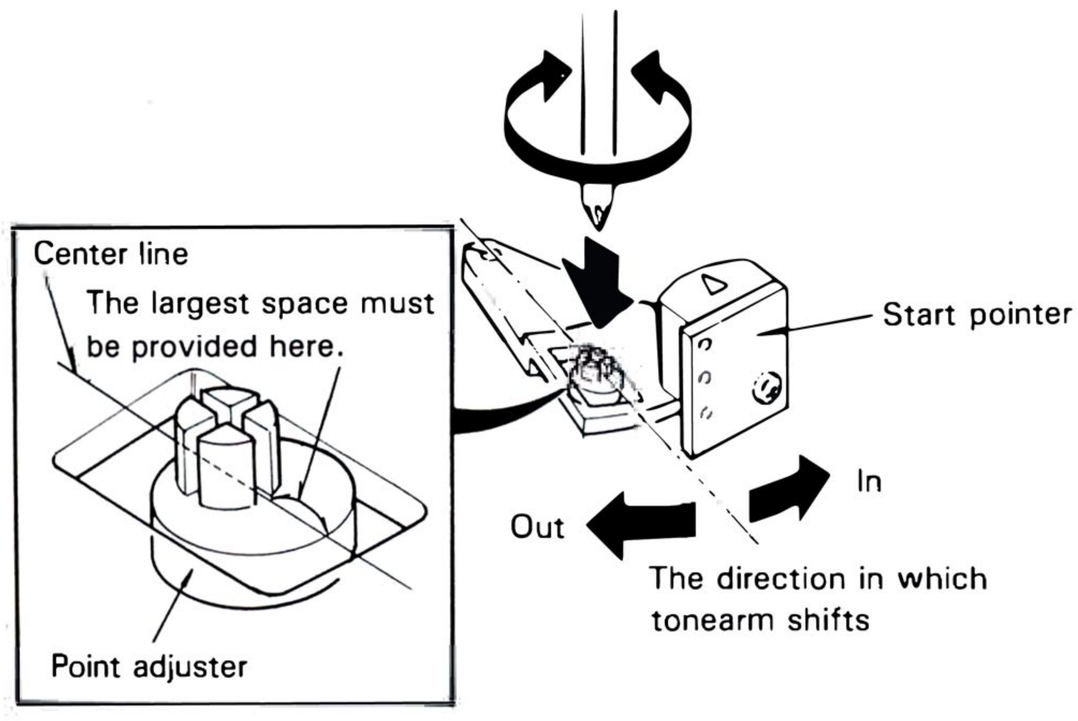

NOTE: Position the start pointer and return holder correctly, as the position of these parts are essential to determine the start and return positions.

2. Installing the search arm
1. Return the tonearm to the arm rest.
2. Center the start pointer (refer to the ''Installing the start pointer and return holder'').
3. Install the search arm so that the position mark of the search arm is aligned with the triangle mark of the start pointer.

NOTE: Install the search arm so that the end of the search arm sector contacts the idler center.

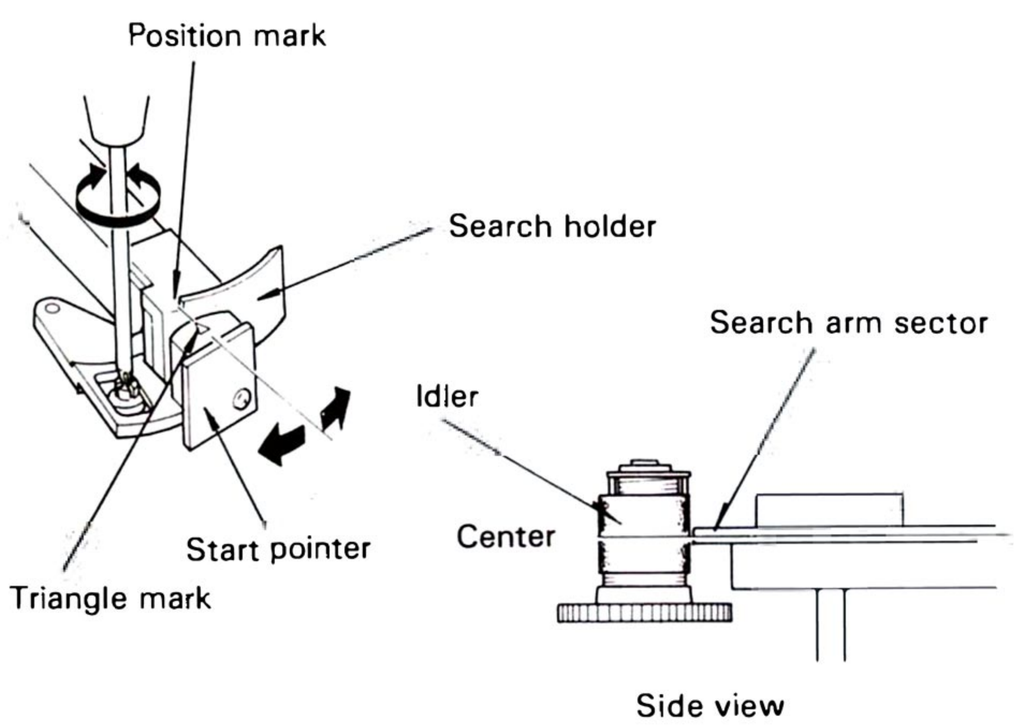

3. Position holder and guide
Before adjusting the position holder, align the position guide hole with the mechanism chassis hole.
Pass the + screwdriver through the tonearm base access hole and adjust the position holder. Turning the screwdriver clockwise shifts the tonearm inwards and turning the screwdriver counterclockwise shifts the tonearm outwards. Turning the screwdriver 60° will shift the stylus tip by 0.85 mm. The position holder can be turned by 3.2 turns.

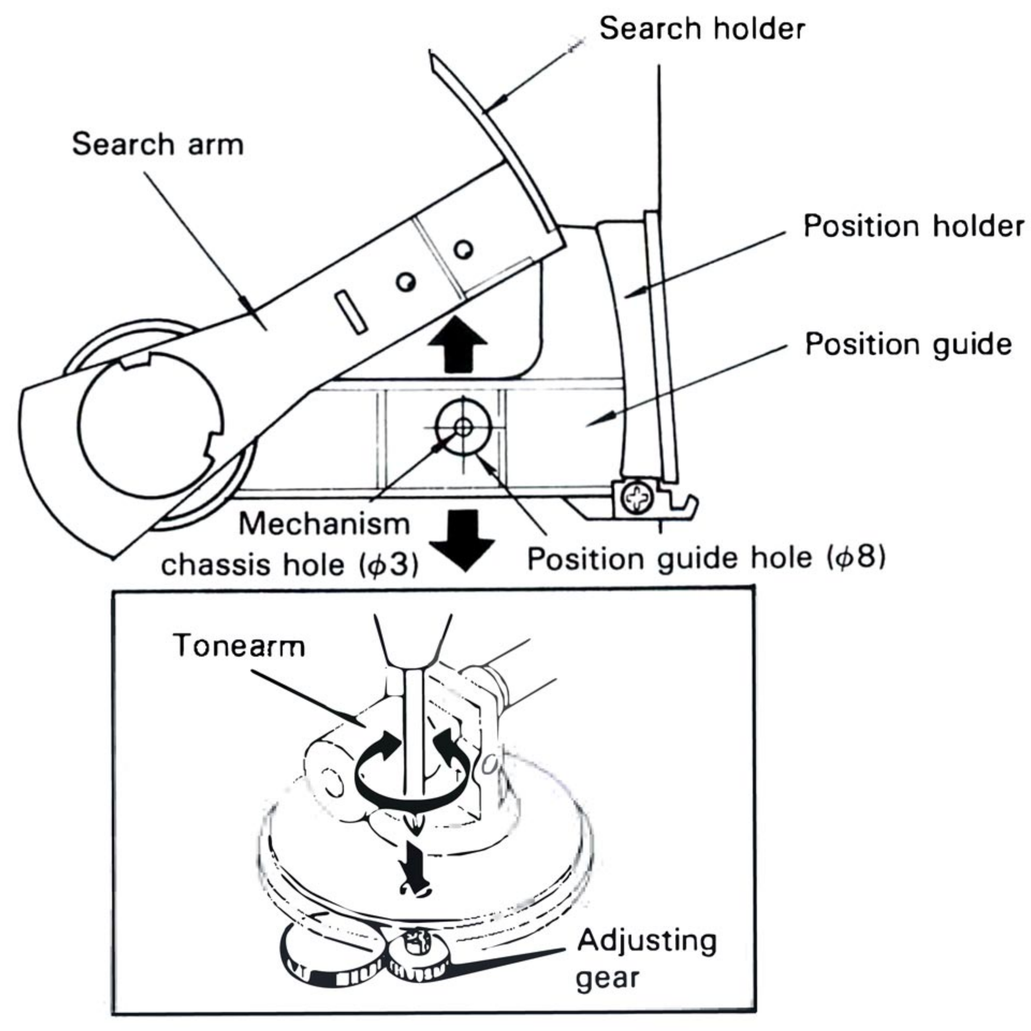

4. Adjusting the auto-in position
Adjust the auto-in in the 30 cm record auto-in mode. Put the turntable in the 30 cm record auto-in mode. Play back the test record. Adjust the auto-in adjusting gear through the tonearm base access hole so that the auto-in action starts at 26 ± 3 counts of the test record (refer to the ''Position holder and guide'').

5. Adjusting the auto-return position
Use the test record to adjust the auto-return position as well as for auto-in adjustment. Adjust the point adjuster so that the auto-return action starts at the 17 count of the test record (through the access hole on the bottom cover).

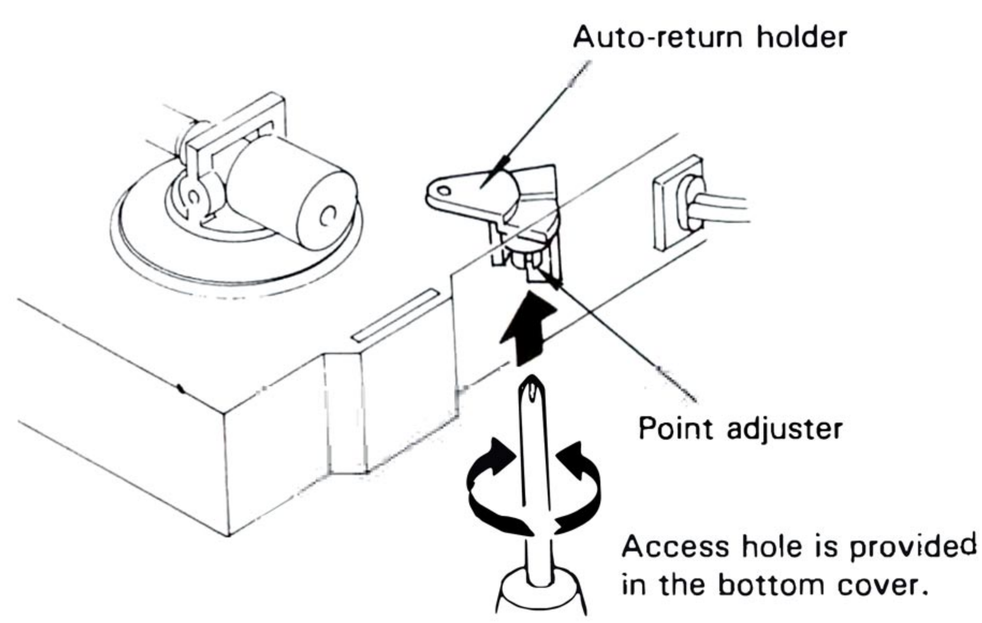

<Auto-return position adjustment>

6. Adjusting the clearance between the idler and clutch arm.

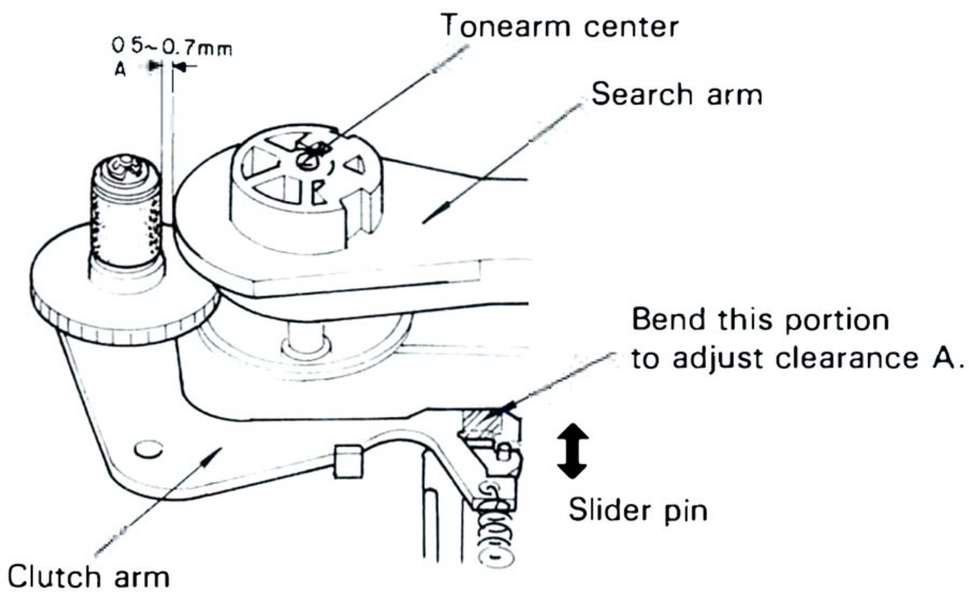

<Solenoid: OFF>

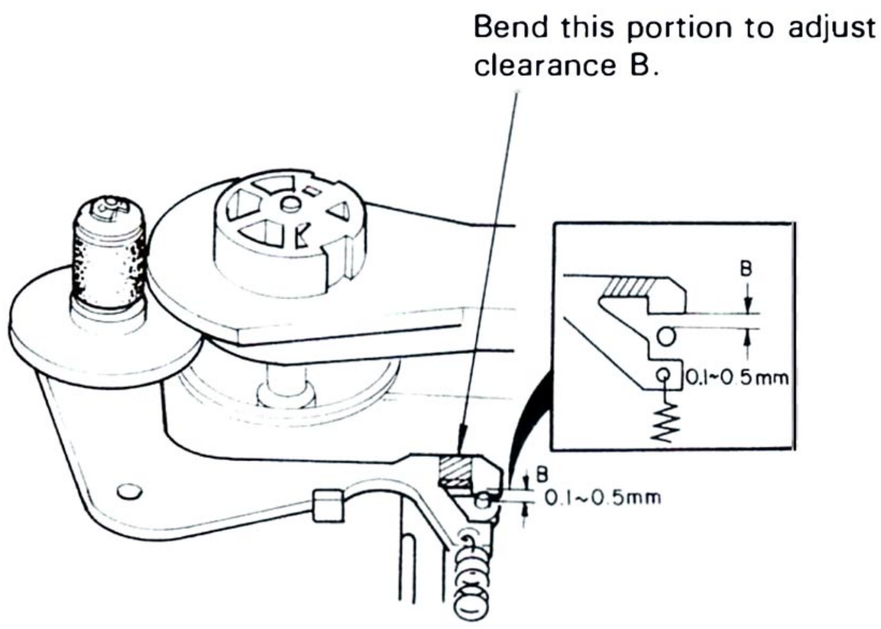

<Solenoid: ON>

7. Adjusting the motor speed

If the correct speed is not obtained by turning the fine speed adjustment knob, turn the PC trimming pots of the motor PCB. Always center the fine-speed adjustment knob before adjusting the PC trimming pots. When adjusting the PC trimming pots, make sure the turntable is level. **Access holes are provided in the bottom cover.**

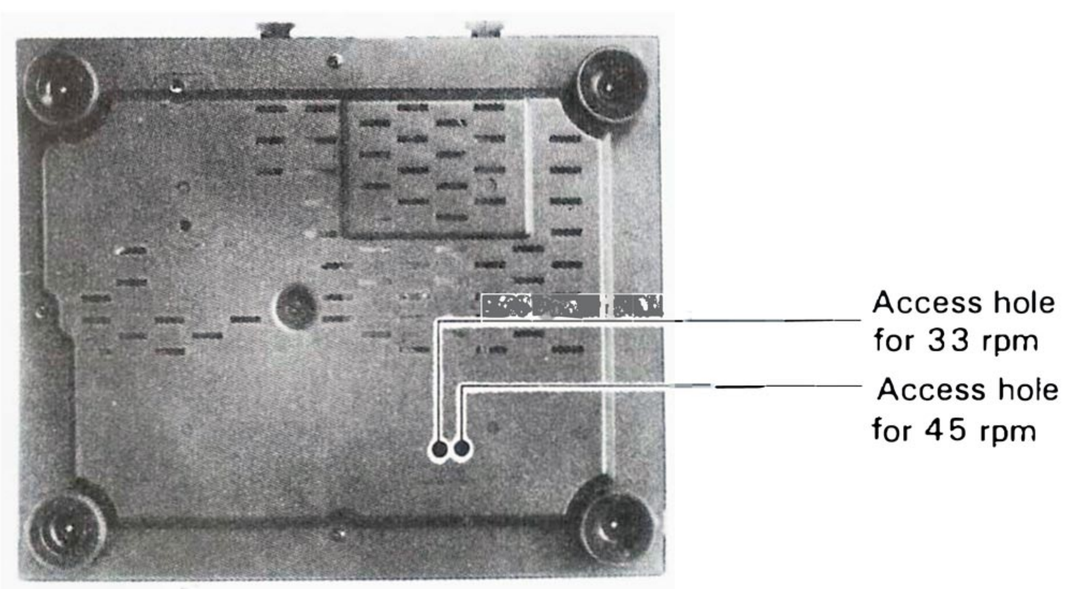

<Positions of the speed adjustment access holes>

KENWOOD test record 3 (P-3027) (Part No.: T99-0204-05)

This test record is for auto lead-in and auto lead-out position adjustment and S/N measurement. In the KD-4100 (R), use the A side to adjust the auto-in and auto-out positions. The contents of this record are as shown below.

Band	Contents		Remarks
1	30 cm lead-in groove		Lead-in position adjustment
	L-ch: Announcement (1 ~ 65)	R-ch: 1 kHz	
2	25 cm lead-in groove		
	L-ch: Announcement (1 ~ 65)	R-ch: 1 kHz	
3	17 cm lead-in groove		
	L-ch: Announcement (1 ~ 65)	R-ch: 1 kHz	
4	30/17 cm lead-out groove		Lead-out position adjustment
	L-ch: Announcement (1 ~ 59)	R-ch: 315 Hz	

7. Adjusting the inside force canceller

1. Fully shift the tonearm inwards.
2. Route the inside force canceller wire so that excessive force is not applied to the canceller cam ass'y spring.
3. Set the canceller knob to "0". At this time, the condition indicated in item 2 must be maintained.

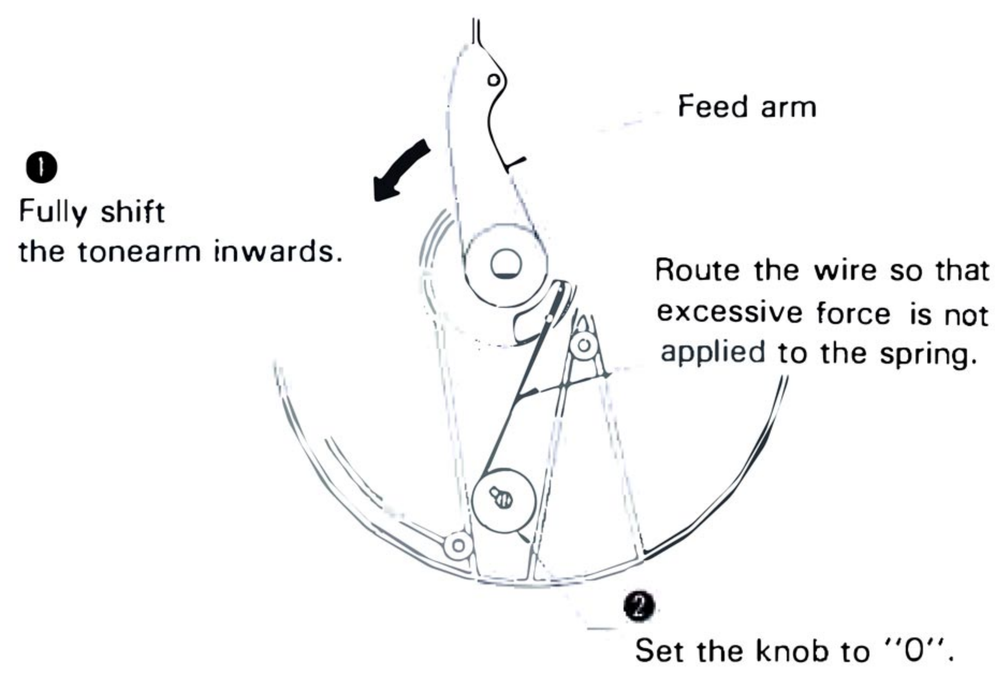

EXPLODED VIEW

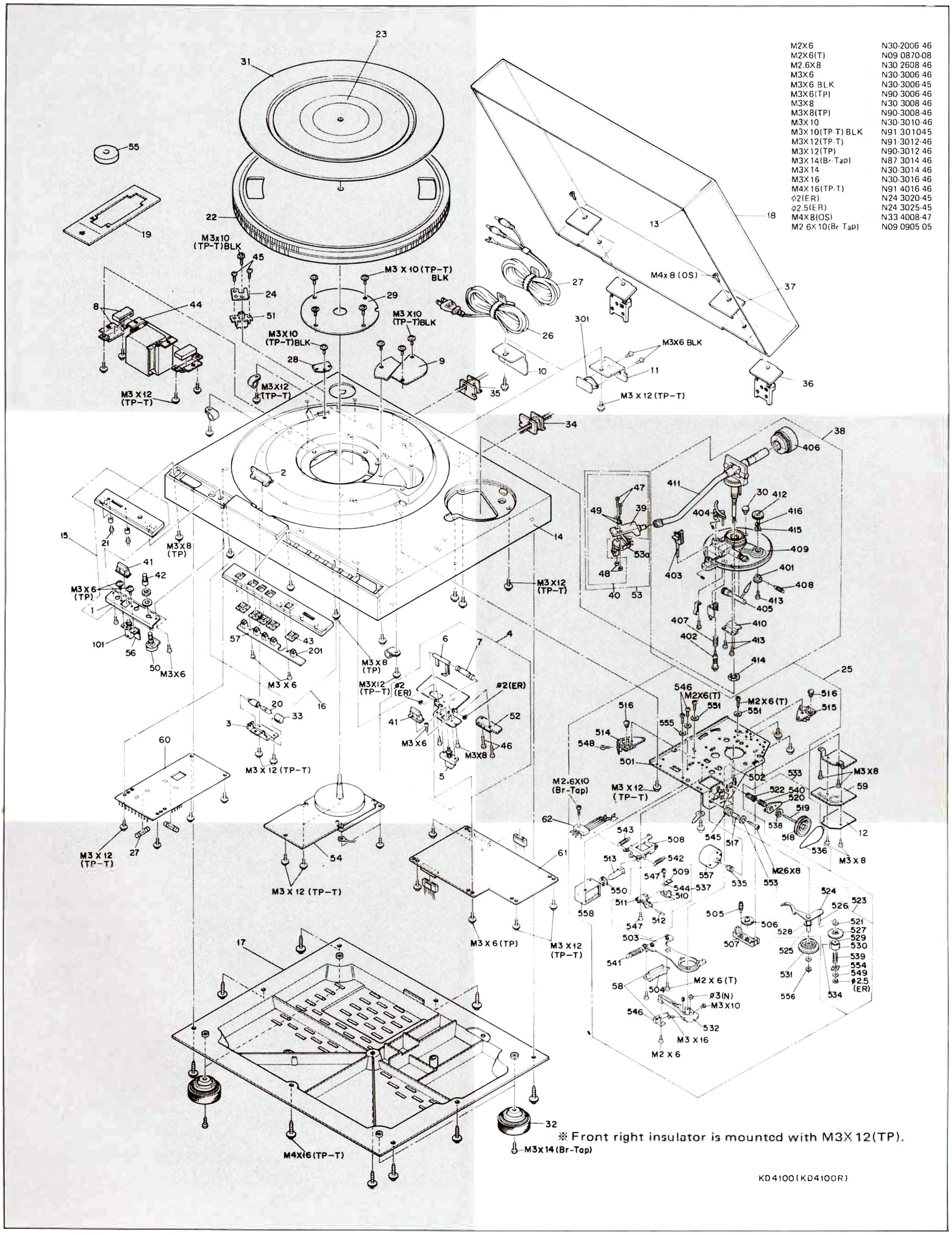

TROUBLESHOOTING

A) Auto start does not operate.

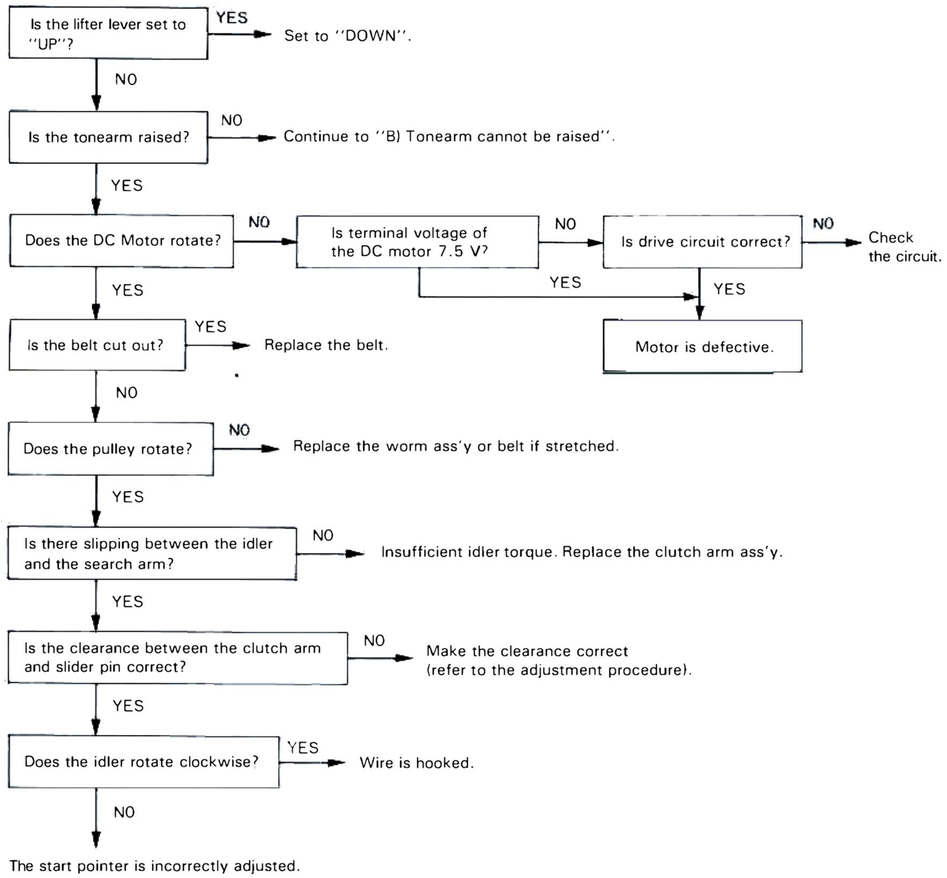

B) Tonearm cannot be raised.

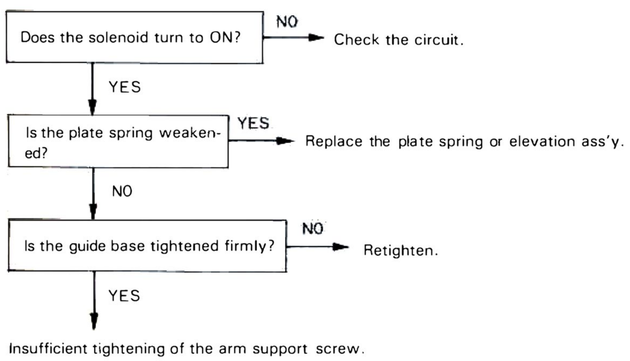

C) Auto lead-in cannot be started (the tonearm does not lower at the specified position.)

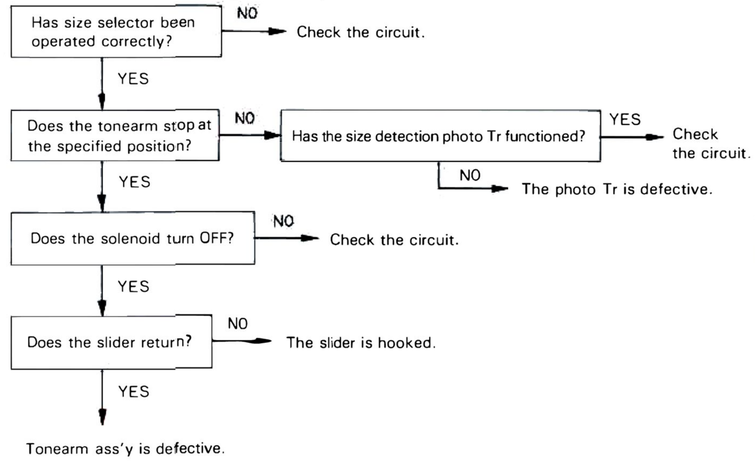

B) The auto-in position cannot be adjusted.

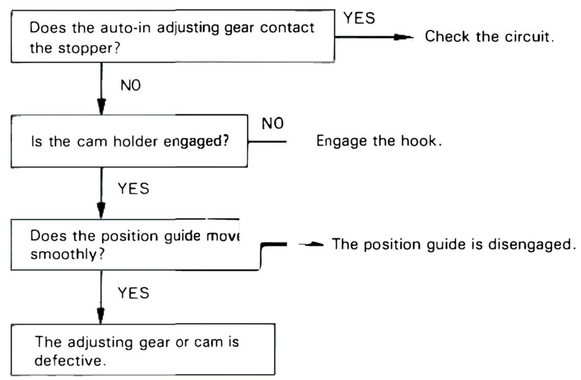

E) The tonearm is knocking.

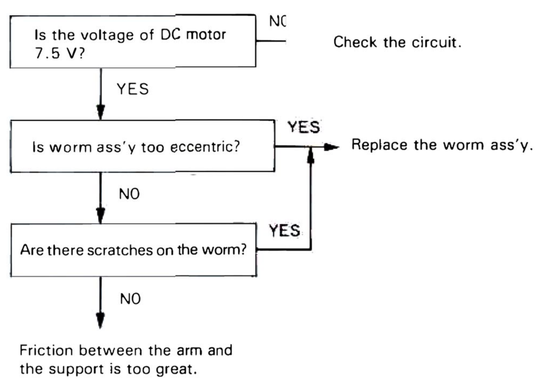

F) Auto-return position cannot be adjusted.

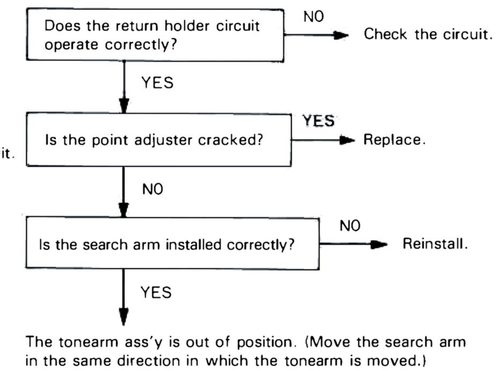

G) The DC motor generates abnormal noise.

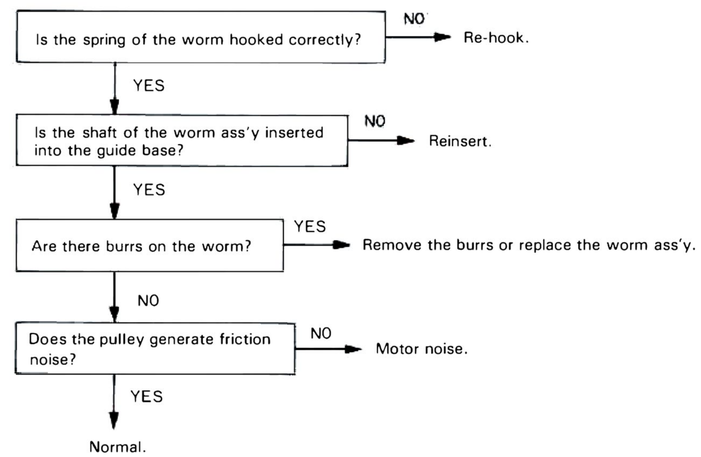

H) There is too much difference between the auto-in and repeat-in.

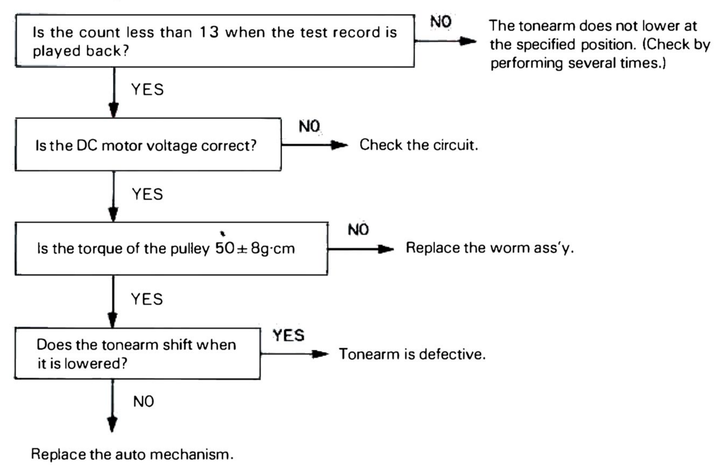

LOGIC DIAGRAM

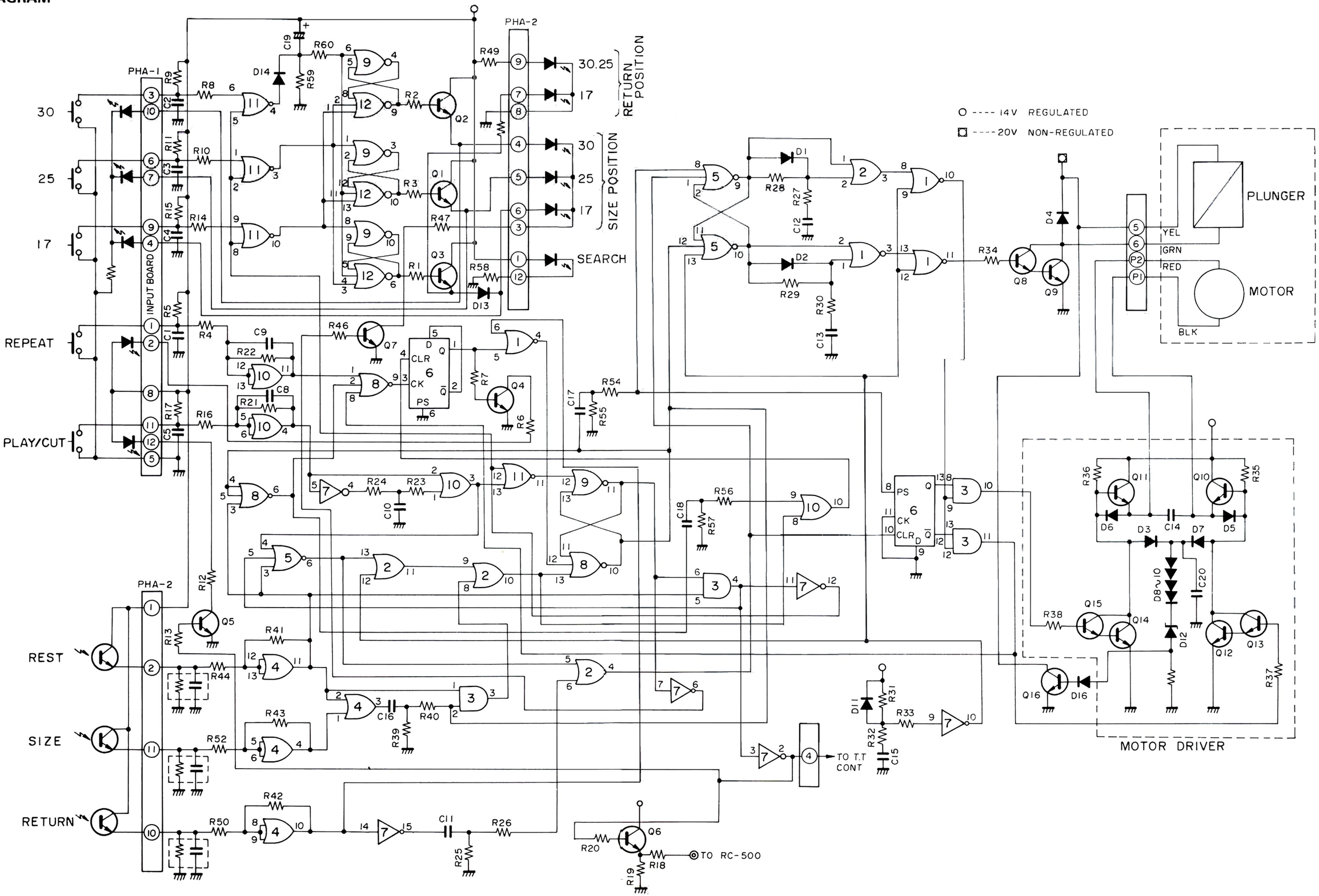

PC BOARD

POWER SUPPLY (X27-1370) Component side

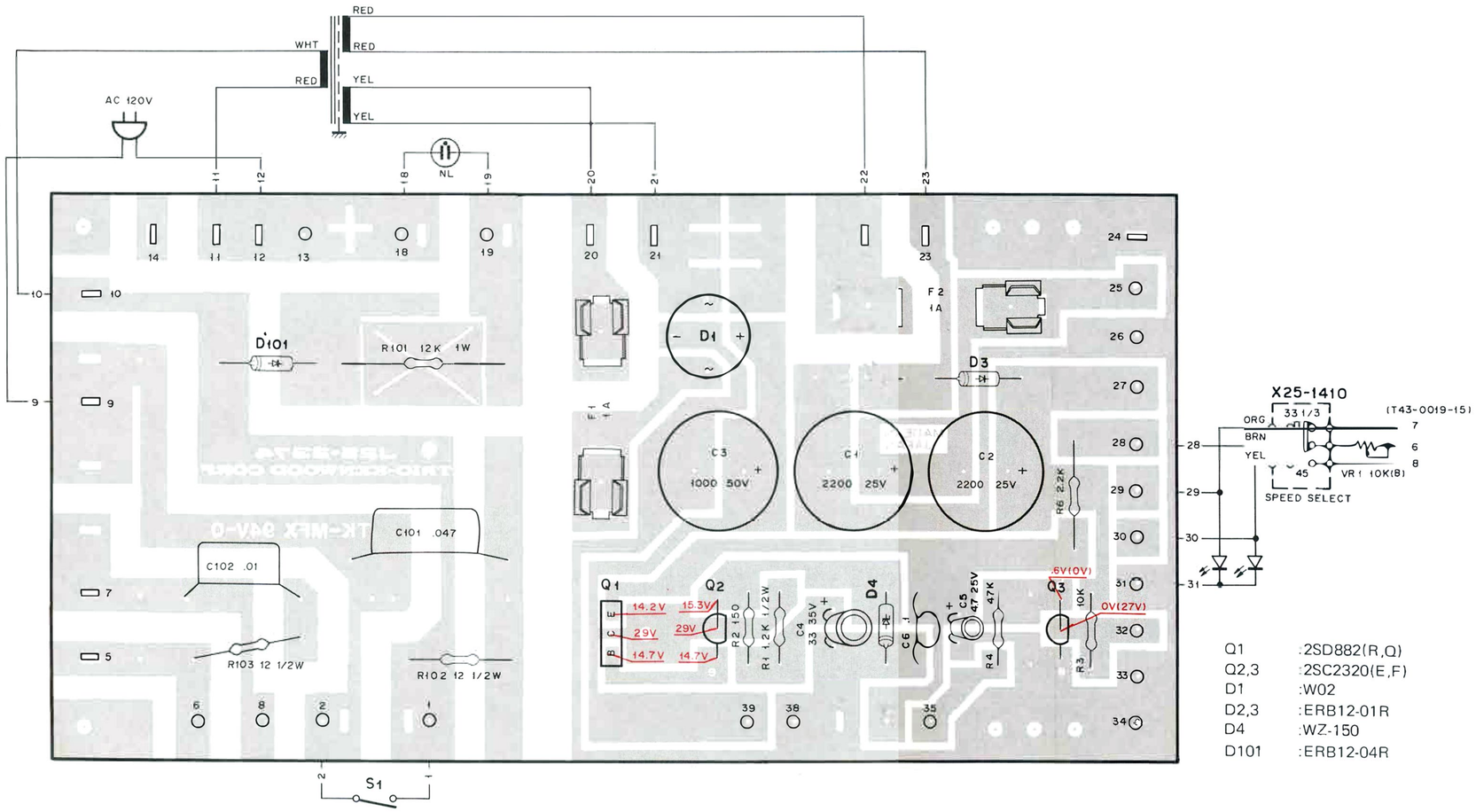

Q1 :2SD882(R,Q)
Q2,3 :2SC2320(E,F)
D1 :W02
D2,3 :ERB12-01R
D4 :WZ-150
D101 :ERB12-04R

)R (X25-1490-00) Foil side

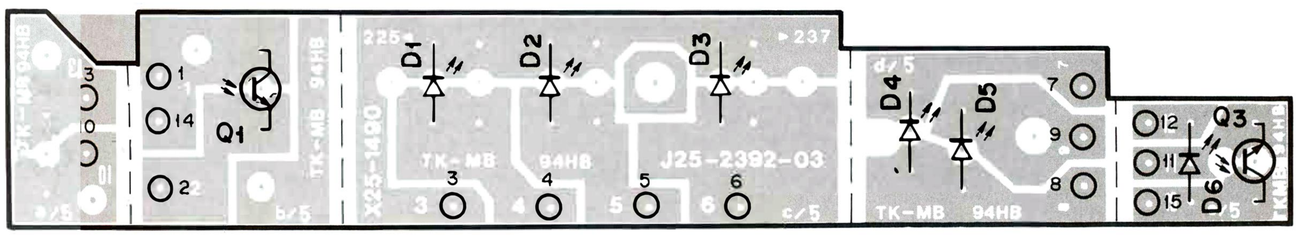

Q1~3 :TPS605
D1~6 :TLR121

PC BOARD

CONTROL AMP (X29-1170) Component side

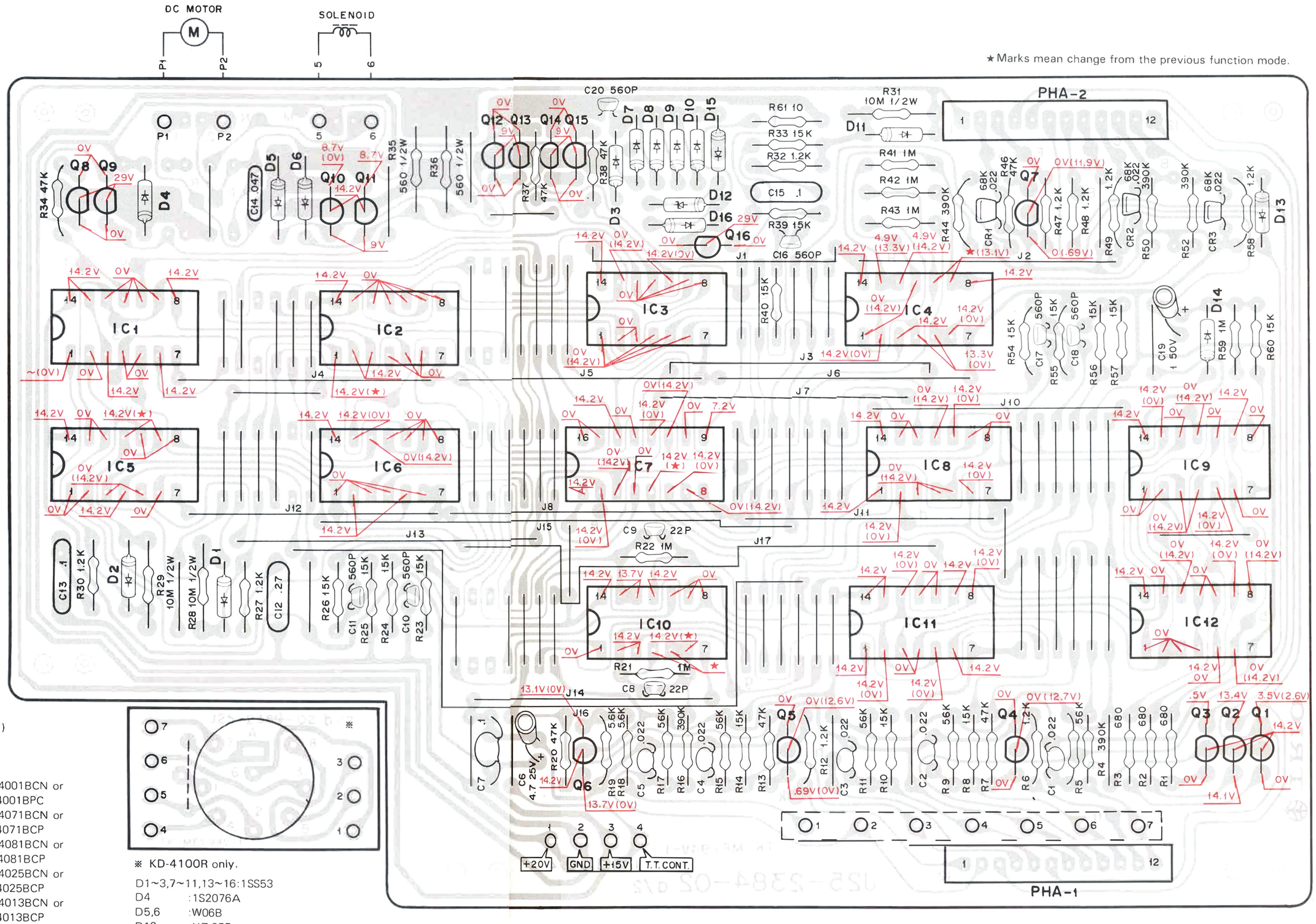

Q1~8,13,15,16:2SC2320(E,F)
Q9 :2SC2003(L,K)
Q10,11 :2SC1383NC(Q,R)
Q12,14 :2SD355(D,E)
IC1,9,11 :CD4001BE or CD4001BCN or MC14001BCP or 4001BPC
IC2,4,10 :CD4071BE or CD4071BCN or 4071BPC or MC14071BCP
IC3 :CD4081BE or CD4081BCN or 4081BPU or MC14081BCP
IC5,8,12 :CD4025BE or CD4025BCN or 4025BPC or MC14025BCP
IC6 :CD4013BE or CD4013BCN or 4013BPC or MC14013BCP
IC7 :CD4049UBE or CD4049UCN or 4049BPC or MC14049UBCP

※ KD-4100R only.

D1~3,7~11,13~16:1SS53
D4 :1S2076A
D5,6 :W06B
D12 :XZ-057

KENWOOD

FULL AUTOMATIC DIRECT-DRIVE TURNTABLE

(KD-4100R) KD-4100

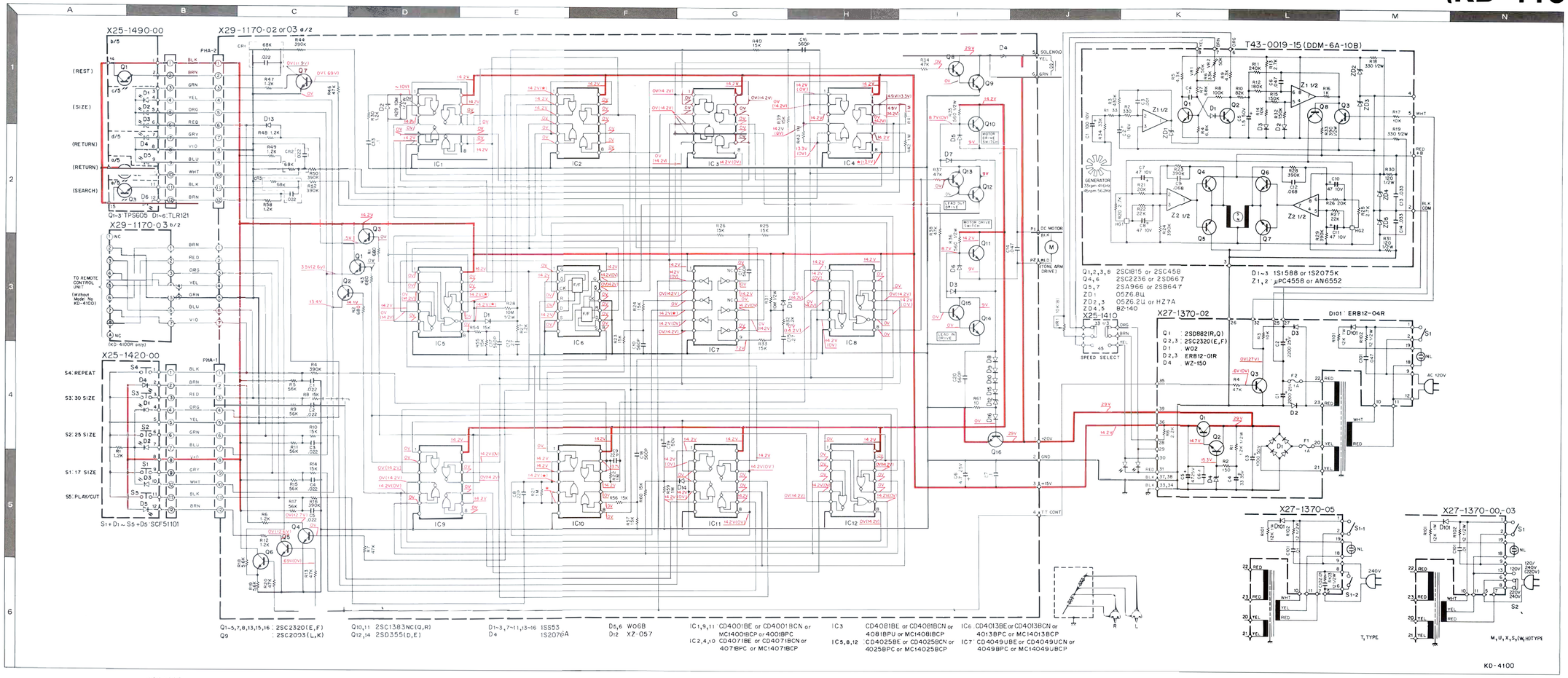

SPECIFICATIONS

MOTOR & TURNTABLE

Drive System	Direct-Drive
Motors	Coreless & Slotless DC Servo Motor (For Platter Drive), 2-Pole, 3-Slot DC Micro Motor (For Automatic Functions)
Turntable Platter	31 cm (12-3/16") Diameter, Aluminum Alloy Die-Cast, Weight 1.15 kg (2.54 lbs)
Speeds	2 Speeds, 33-1/3 and 45rpm.
Speed Control Range	Within ± 3%
Wow & Flutter	Less than 0.03% (WRMS)
Rumble	DIN weighted better than −71 dB

TONEARM

Type	Static-Balance Type, S-Shaped Tubular Arm, EIA Plug-in Connector
Effective Tonearm Length	225 mm (8-7/8")
Overhang	15 mm (9/16")
Tracking Error	± 1.5 Degrees
Stylus Pressure Variable Range	0 to 3 grams
Usable Cartridge Weight	3 to 9 grams (with supplied headshell)

CARTRIDGE

(U.S.A., Canada and U.K. Models are not equipped with the V-39MKIII Cartridge.)

Furnished Cartridge	V-39MKIII (Moving Magnet Type)
Stylus	N-39MKIII with 0.5 mil Diamond
Frequency Response	20 Hz to 20,000 Hz
Output Voltage	2.3 mV (1,000 Hz, 5 cm/sec.)
Optimum Tracking Force	1.5 ± 0.3, −0 gram
Load Impedance	47 kohms
Replacement Stylus	N-39MKIII
ADDITIONAL FEATURES	Electronically Controlled Full-Automatic Tonearm System (Automatic Lead-in/Return/Cut/Repeat), Illuminated Stroboscope, Anti-Skating Device, Oil-Damped Cueing Device, Speed Selector Switch with LED Indicators, Low Capacitance Phono Cables, Headshell and 45 rpm Adaptor Stand, Stylus Pressure Direct Readout Counter, Built-in Insulators.

MISCELLANEOUS

Power Requirements	AC 120 V, 60 Hz...U.S.A. and Canada Models AC 240 V, 50 Hz...U.K. Model AC 120 V/220 V, 50/60 Hz (Switchable)...European and Military Models AC 120 V/240 V, 50/60 Hz (Switchable)...other countries
Power Consumptions	7.0 watts...U.S.A. and Canada Models 20.0 watts...Other countries
Dimensions	W440mm×H140mm×D375mm W17-5/16"×H5-1/2"×D14-3/4"
Weight	7.9 kg (17.4 lbs)
SUPPLIED ACCESSORY	45 rpm Adaptor
CABINET	
Material	Construction of the cabinet is of Anti-Resonance Compression Base (ARCB) with injection molded ABS copolymer resin bottom cover. Massive ARCB is compression molded from limestone powder and glass powder, bonded with polyester resin.

Note:
Kenwood follows a policy of continuous advancements in development. For this reason specifications may be changed without notice.

★Marks mean change from the previous function mode.

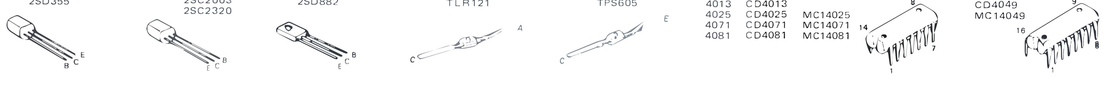

PARTS LIST

Ref. No. 参照番号	Parts No. 部品番号	Description 部品名／規格	Remarks 備考
UNIT (KD-4100)			
1 2A	-	SUB CHASSIS	
2 2A	-	INDICATOR (STROBE)	
3 2A	-	MOUNTING HARDWARE(LAMP)	
4 2B	-	SWITCH MECHANISM ASSY	
5 2A	-	PUSH LOCK	
6 2A	-	SWITCH ARM	
7 2B	-	SHAFT	
8 1A	-	CUSHION ASSY	
9 1A	-	HOLE PLATE	
10 1B	-	L SHAPED COVER 4100	
11 1B	-	REMOTE MOUNT METAL 4100R	
12 3B	-	SHIELDING PLATE	
13 1B	-	CUSHION	
14 2B	A02-0322-05	PLASTIC CABINET 4100	*M
14 2B	A02-0322-05	PLASTIC CABINET 4100	KP
14 2B	A02-0322-05	PLASTIC CABINET 4100	UX
14 2B	A02-0322-05	PLASTIC CABINET 4100	SW
14 2B	A02-0322-05	PLASTIC CABINET 4100	H
14 2B	A02-0324-05	PLASTIC CABINET 4100	*T
14 2B	A02-0326-05	PLASTIC CABINET 4100R	*M
14 2B	A02-0326-05	PLASTIC CABINET 4100R	KP
14 2B	A02-0326-05	PLASTIC CABINET 4100R	UX
14 2B	A02-0326-05	PLASTIC CABINET 4100R	SW
14 2B	A02-0326-05	PLASTIC CABINET 4100R	H
14 2B	A02-0327-05	PLASTIC CABINET 4100R	*T
15 2A	A21-0675-24	DRESSING PANEL ASSY	
16 2A	A21-0678-13	DRESSING PANEL ASSY	*
17 3A	A40-0535-52	BOTTOM PLATE	MP
17 3A	A40-0535-52	BOTTOM PLATE	UX
17 3A	A40-0535-52	BOTTOM PLATE	Sw
17 3A	A40-0535-52	BOTTOM PLATE	HT
17 3A	A40-0536-32	BOTTOM PLATE	K
18 1B	A53-0223-12	TURNTABLE COVER ASSY	
-	B46-0055-20	WARRANTY CARD	P
-	B46-0060-00	WARRANTY CARD	T
-	B46-0061-20	WARRANTY CARD	K
-	B46-0062-20	WARRANTY CARD	UH
-	B46-0063-00	WARRANTY CARD	U
-	B46-0064-10	WARRANTY CARD	X
-	B50-2346-00	INST. MANUAL 4100	*M
-	B50-2346-00	INST. MANUAL 4100	PX
-	B50-2348-00	INST. MANUAL 4100	*K
-	B50-2348-00	INST. MANUAL 4100	US
-	B50-2348-00	INST. MANUAL 4100	WH
-	B50-2349-00	INST. MANUAL 4100	*T
-	B50-2350-00	INST. MANUAL 4100R	*M
-	B50-2350-00	INST. MANUAL 4100R	PX
-	B50-2351-00	INST. MANUAL 4100R	KU
-	B50-2351-00	INST. MANUAL 4100R	SW
-	B50-2351-00	INST. MANUAL 4100R	H
-	B50-2352-00	INST. MANUAL 4100R	T
-	B59-0018-00	SERVICE STATIONS LIST	U
19 1A	B23-0004-04	OVERHANG GAGE	KP
19 1A	B23-0004-04	OVERHANG GAGE	T
20 2A	B30-0724-05	LAMP	*
21 2A	B38-0211-05	DISPLAY ASSY (LED)	
22 1A	D02-0028-05	TURNTABLE PLATTER	
23 1A	D09-0202-04	STROBOSCOPE	
24 1A	D32-0080-24	SWITCH STOPPER	MU
24 1A	D32-0080-24	SWITCH STOPPER	XS
24 1A	D32-0080-24	SWITCH STOPPER	WH
25 2B	D40-0459-05	MECHANISM ASSY	*
26 1B	E30-0181-05	POWER CORD	KP
26 1B	E30-0459-05	POWER CORD	WH
26 1B	E30-0587-05	POWER CORD	ST
26 1B	E30-1317-15	POWER CORD	MU
26 1B	E30-1341-05	POWER CORD	*X
27 1B	E30-1319-15	AUDIO CORD	MP
27 1B	E30-1319-15	AUDIO CORD	UX
27 1B	E30-1319-15	AUDIO CORD	SW
27 1B	E30-1319-15	AUDIO CORD	HT
27 1B	E30-1320-25	AUDIO CORD	K
28 1A	F07-0610-04	COVER	KP
28 1A	F07-0610-04	COVER	T
29 1A	F07-0657-04	MOTOR COVER	
30 2B	F19-0504-04	HOLE CAP	
F1 ,2	F05-1023-05	FUSE(1A)	MU
F1 ,2	F05-1023-05	FUSE(1A)	XS
F1 ,2	F05-1024-05	FUSE(1A)	KP
F1	F05-8012-05	FUSE(800MA)	WH
F1	F05-8012-05	FUSE(800MA)	T
F2	F06-1021-05	FUSE(1A)	WH
F2	F06-1021-05	FUSE(1A)	T
31 1A	G16-0330-03	TURNTABLE SHEET ASSY	MP
31 1A	G16-0330-03	TURNTABLE SHEET ASSY	UX
31 1A	G16-0330-03	TURNTABLE SHEET ASSY	SW
31 1A	G16-0330-03	TURNTABLE SHEET ASSY	HT
31 1A	G16-0331-03	TURNTABLE SHEET ASSY	K
-	H01-2365-14	CARTON BOX 4100	*M
-	H01-2365-14	CARTON BOX 4100	KU
-	H01-2365-14	CARTON BOX 4100	XS
-	H01-2365-14	CARTON BOX 4100	H
-	H01-2366-14	CARTON BOX 4100	P
-	H01-2367-14	CARTON BOX 4100	W
-	H01-2368-14	CARTON BOX 4100	T
-	H01-2370-04	CARTON BOX 4100R	MK
-	H01-2370-04	CARTON BOX 4100R	UX
-	H01-2370-04	CARTON BOX 4100R	SH
-	H01-2371-04	CARTON BOX 4100R	P
-	H01-2372-04	CARTON BOX 4100R	W
-	H01-2373-04	CARTON BOX 4100R	T
-	H10-2246-02	POLYSTYRENE FIXTURE A	
-	H10-2247-02	POLYSTYRENE FIXTURE B	
-	H10-2248-02	POLYSTYRENE FIXTURE C	
-	H12-0347-02	PACKING FIXTURE A	
-	H12-0348-04	PACKING FIXTURE	*
-	H12-0354-04	PACKING FIXTURE B	
-	H20-0382-04	COVER	KP
-	H20-0382-04	COVER	UX
-	H20-0382-04	COVER	SW
-	H20-0382-04	COVER	HT
-	H25-0029-04	BAG	
-	H25-0078-04	BAG	
-	H25-0159-04	BAG	M
32 3B	J02-0331-05	FOOT	MP
32 3B	J02-0331-05	FOOT	UX
32 3B	J02-0331-05	FOOT	SW
32 3B	J02-0331-05	FOOT	WH
32 3B	J02-0334-05	FOOT	K
33 2A	J19-1935-04	HOLDER (LAMP)	*

www.hifiengine.com

PARTS LIST

Ref. No. 参照番号	Parts No. 部品番号	Description 部品名／規格	Remarks 備考
34 2B	J42-0312-05	BUSHING(A)	
35 1B	J42-0313-05	BUSHING(B)	
36 1B	J50-0307-05	HINGE(1)	
37 1B	J50-0308-05	HINGE(2)	
38 1B	J91-0127-05	TONEARM ASSY	*
39 1B	J92-0057-05	HEAD SHALL	
40 1B	J92-0058-05	HEAD SHALL ASSY	KP
40 1B	J92-0058-05	HEAD SHALL ASSY	T
41 2A	K23-0638-04	KNOB (SPEED)	
42 2A	K27-0317-14	KNOB (RPM)	
43 2A	K29-0667-24	KNOB ASSY (SELECTOR)	*
44 1A	L01-6251-05	POWER TRANSFORMER	*K
44 1A	L01-6251-05	POWER TRANSFORMER	P
44 1A	L01-6254-05	POWER TRANSFORMER	MU
44 1A	L01-6254-05	POWER TRANSFORMER	XS
44 1A	L01-6254-05	POWER TRANSFORMER	WH
44 1A	L01-6254-05	POWER TRANSFORMER	T
45 1A	N09-0167-05	SCREW	WH
46 2B	N09-0195-04	SCREW	WH
46 2B	N09-0275-04	SCREW(M3X25)	T
46 2B	N30-3014-46	PAN HEAD MACHINE SCREW	
47 1B	N09-0843-08	SCREW(M2.6X12)	MU
47 1B	N09-0843-08	SCREW(M2.6X12)	XS
47 1B	N09-0843-08	SCREW(M2.6X12)	WH
47 1B	N09-0850-04	SCREW(M2.6X10)	KP
47 1B	N09-0850-04	SCREW(M2.6X10)	T
47 1B	N09-0851-04	SCREW(M2.6X15)	KP
47 1B	N09-0851-04	SCREW(M2.6X15)	T
48 2B	N14-0108-05	NUT	MU
48 2B	N14-0108-05	NUT	XS
48 2B	N14-0108-05	NUT	WH
48 2B	N14-0412-04	NUT	KP
48 2B	N14-0412-04	NUT	T
49 2B	N19-0175-09	WASHER	KP
49 2B	N19-0175-09	WASHER	T
49 2B	N19-0516-05	WASHER	MU
49 2B	N19-0516-05	WASHER	XS
49 2B	N19-0516-05	WASHER	WH
50 2A	R01-3301-05	POT. 10K(B) VR1	
51 1A	S31-2001-05	SLIDE SWITCH (S2)	MU
51 1A	S31-2001-05	SLIDE SWITCH (S2)	XS
51 1A	S31-2001-05	SLIDE SWITCH (S2)	WH
52 2B	S50-1015-05	SENSITIVE SWITCH (S1)	KP
52 2B	S50-1015-05	SENSITIVE SWITCH X2	T
52 2B	S50-1015-05	SENSITIVE SWITCH (S1)	UX
52 2B	S50-1015-05	SENSITIVE SWITCH (S1)	SW
52 2B	S50-1015-05	SENSITIVE SWITCH (S1)	HM
52 2B	S50-1307-05	SENSITIVE SWITCH (S1)	KP
52 2B	S50-1307-05	SENSITIVE SWITCH (S1)	UX
52 2B	S50-1307-05	SENSITIVE SWITCH (S1)	SM
53 2B	T21-0066-05	MAGNETIC CARTRIDGE ASSY	MU
53 2B	T21-0066-05	MAGNETIC CARTRIDGE ASSY	XS
53 2B	T21-0066-05	MAGNETIC CARTRIDGE ASSY	WH
53a 2B	T21-0067-05	MAGNETIC CARTRIDGE	MU
53a 2B	T21-0067-05	MAGNETIC CARTRIDGE	XS
53a 2B	T21-0067-05	MAGNETIC CARTRIDGE	WH
54 3A	T43-0019-15	DIRECT DRIVE MOTOR	
55 1A	W01-0057-14	EP ADAPTER	

Ref. No. 参照番号	Parts No. 部品番号	Description 部品名／規格	Remarks 備考
56 2A	X25-1410-00	SWITCH PCB ASSY	*
57 2A	X25-1420-00	OPERATION PCB ASSY	*
58 3B	X25-1490-00	SENSOR PCB ASSY	*
59 2B	X25-1510-00	REPEATER PCB ASSY	*
60 2A	X27-1370-00	POWER SUPPLY PCB ASSY	*M
60 2A	X27-1370-00	POWER SUPPLY PCB ASSY	UX
60 2A	X27-1370-00	POWER SUPPLY PCB ASSY	S
60 2A	X27-1370-02	POWER SUPPLY PCB ASSY	K
60 2A	X27-1370-03	POWER SUPPLY PCB ASSY	WH
60 2A	X27-1370-04	POWER SUPPLY PCB ASSY	P
60 2A	X27-1370-05	POWER SUPPLY PCB ASSY	T
61 3B	X29-1170-00	CONT AMP ASSY 4100R	*M
61 3B	X29-1170-00	CONT AMP ASSY 4100R	UX
61 3B	X29-1170-00	CONT AMP ASSY 4100R	SW
61 3B	X29-1170-00	CONT AMP ASSY 4100R	HT
61 3B	X29-1170-01	CONT AMP ASSY 4100	*M
61 3B	X29-1170-01	CONT AMP ASSY 4100	UX
61 3B	X29-1170-01	CONT AMP ASSY 4100	SW
61 3B	X29-1170-01	CONT AMP ASSY 4100	HT
61 3B	X29-1170-02	CONT AMP ASSY 4100	*K
61 3B	X29-1170-02	CONT AMP ASSY 4100	P
61 3B	X29-1170-03	CONT AMP ASSY 4100R	*K
61 3B	X29-1170-03	CONT AMP ASSY 4100R	P
62 3B	S46-2308-03	MOUNTING SWITCH	
SWITCH PCB ASS'Y (X25-1410-00)			
101 2A	S40-2307-05	PUSH SWITCH	S1
OPERATION PCB ASS'Y (X25-1420-00)			
201 2A	S59-1302-05	SWITCH S1-5	*
SENSOR PCB ASS'Y (X25-1490-00)			
D1 -6	V11-3100-60	TLR121	*
Q1 -3	V30-0386-10	TPS605	*
POWER SUPPLY PCB ASS'Y (X27-1370)			
C1 ,2	C24-1422-89	ELECTRO 2200UF 25WV	
C3	C24-1710-89	ELECTRO 1000UF 50WV	*
C4	C24-6533-61	ELECTRO 33UF 35WV	
C5	C24-1447-51	ELECTRO 4.7UF 25WV	
C6	C90-0270-05	CERAMIC 0.1UF K	
C101	C54-3310-39	CERAMIC 0.01UF P	WH
C101,102	C54-3310-39	CERAMIC 0.01UF P	T
C101	C91-0302-05	CERAMIC 0.047UF K	K
C101	C91-0308-05	MF 0.01UF 1000V	MU
C101	C91-0308-05	MF 0.01UF 1000V	XS
C101	C91-0323-05	CERAMIC 0.047UF K	P
-	J13-0055-05	FUSE HOLDER	
R101	R47-5412-35	FL-PROOF RS12K J 3A	
R102	R40-8312-06	RC 12 K 2H	
R102,103	R40-8312-06	RC 12 K 2H	T
D1	V11-2400-20	WO2	
D2 ,3	V11-7100-60	ERB12-01R	
D4	V11-0307-05	WZ-150	
D101	V11-7100-70	ERB12-04R	
Q1	V04-0882-20	2SD882(R,Q)	*
Q2 ,3	V03-2320-10	2SC2320(E,F)	
CONTROL (X29-1170)			
C1 -5	C55-1722-38	CERAMIC 0.022UF Z	
C6	C24-1447-51	ELECTRO 4.7UF 25WV	
C7	C90-0270-05	CERAMIC 0.1UF K	
C8 ,9	C71-1722-05	CERAMIC 22PF J	
C10 ,11	C52-1756-16	CERAMIC 560PF K	

www.hifiengine.com

PARTS LIST

Ref. No. 参照番号	Parts No. 部品番号	Description 部品名／規格	Remarks 備考
C12	C45-1727-45	MYLAR 0.27UF J	
C13	C45-1710-45	MYLAR 0.1UF J	
C14	C55-1747-38	CERAMIC 0.047UF Z	
C15	C45-1727-45	MYLAR 0.027UF J	
C16 -18	C52-1756-16	CERAMIC 560PF K	
C19	C25-1710-57	LL-ELEC 1UF 50WV	
C20	C52-1756-16	CERAMIC 560PF K	
301 1B	E06-0801-05	DIN CONNECTOR 4100R	MU
301 1B	E06-0801-05	DIN CONNECTOR 4100R	WH
301 1B	E06-0801-05	DIN CONNECTOR 4100R	P
301 1B	E06-0801-05	DIN CONNECTOR 4100R	K
301 1B	E06-0801-05	DIN CONNECTOR 4100R	SX
CR1 -3	R90-0403-05	MULTIPLE COMPONENTS	*
R28 ,29	R92-0507-05	RC 10M J 2W	
R31	R92-0507-05	RC 10M J 2W	
R35 ,36	R43-1456-15	FL-PROOF RD560 J 2E	
D1 -3	V11-1200-80	1SS53	
D4	V11-0273-05	1S2076A	
D5 ,6	V11-0295-05	W06B	
D7 -11	V11-1200-80	1SS53	
D12	V11-4176-76	XZ-057	*
D13 -16	V11-1200-80	1SS53	
IC1	V30-0303-10	CD4001BE	
IC1	V30-0303-20	CD4001BCN	
IC1	V30-0378-10	MC14001BCP	*
IC1	V30-0385-10	4001BPC	*
IC2	V30-0368-10	CD4071BE	*
IC2	V30-0369-10	CD4071BCN	*
IC2	V30-0370-10	4071BPC	*
IC2	V30-0381-10	MC14071BCP	*
IC3	V30-0365-10	CD4081BE	*
IC3	V30-0366-10	4081BPC	*
IC3	V30-0367-10	CD4081BCN	*
IC3	V30-0377-10	MC14081BCP	*
IC4	V30-0368-10	CD4071BE	*
IC4	V30-0369-10	CD4071BCN	*
IC4	V30-0370-10	4071BPC	*
IC4	V30-0381-10	MC14071BCP	*
IC5	V30-0371-10	CD4025BE	*
IC5	V30-0372-10	CD4025BCN	*
IC5	V30-0373-10	4025BPC	*
IC5	V30-0379-10	MC14025BCP	*
IC6	V30-0319-30	MC14013BCP	*
IC6	V30-0374-10	CD4013BE	*
IC6	V30-0375-10	CD4013BCN	*
IC6	V30-0376-10	4013BPC	*
IC7	V30-0306-10	CD4049UBE	
IC7	V30-0306-20	CD4049UCN	
IC7	V30-0380-10	MC14049UBCP	*
IC7	V30-0384-10	4049BPC	*
IC8	V30-0371-10	CD4025BE	*
IC8	V30-0372-10	CD4025BCN	*
IC8	V30-0373-10	4025BPC	*
IC8	V30-0379-10	MC14025BCP	*
IC9	V30-0303-10	CD4001BE	
IC9	V30-0303-20	CD4001BCN	
IC9	V30-0378-10	MC14001BCP	*
IC9	V30-0385-10	4001BPC	*
IC10	V30-0368-10	CD4071BE	*
IC10	V30-0369-10	CD4071BCN	*
IC10	V30-0370-10	4071BPC	*
IC10	V30-0381-10	MC14071BCP	*
IC11	V30-0303-10	CD4001BE	
IC11	V30-0303-20	CD4001BCN	
IC11	V30-0378-10	MC14001BCP	*
IC11	V30-0385-10	4001BPC	*
IC12	V30-0371-10	CD4025BE	*
IC12	V30-0372-10	CD4025BCN	*
IC12	V30-0373-10	4025BPC	*
IC12	V30-0379-10	MC14025BCP	*
Q1 -8	V03-2320-10	2SC2320(E,F)	
Q9	V03-2003-30	2SC2003(L,K)	
Q10 ,11	V03-1383-10	2SC1383NC(Q,R)	*
Q12	V04-0355-10	2SD355(D,E)	*
Q13	V03-2320-10	2SC2320(E,F)	
Q14	V04-0355-10	2SD355(D,E)	*
Q15 ,16	V03-2320-10	2SC2320(E,F)	
TONEARM ASS'Y (J91-0127-05)			
401 2B	D12-0215-08	SLIDE CAM ASSY	*
402 2B	D21-0679-08	ELEVATION SHAFT	
403 2B	D39-0090-08	TONEARM REST ASSY	
404 2B	D39-0091-08	TONEARM SUPPORT ASSY	*
405 2B	D40-0465-08	PAUSE MECHANISM ASSY	
406 2B	D91-0122-08	WEIGHT ASSY	*
407 2B	G01-0755-08	COMPRESSION SPRING	
408 2B	G02-0322-08	TENSION SPRING	
38 2B	J91-0127-05	TONEARM TOTAL ASSY	*
409 2B	J19-1921-08	TONEARM BASE	*
410 2B	J19-1922-08	CAM HOLDER	
411 2B	J91-0128-08	TONEARM	*
412 2B	K29-0657-08	CANCELLER KNOB	*
413 2B	N09-0548-04	SET SCREW	
414 2B	N10-2120-46	NUT	
415 2B	N19-0555-08	WASHER	*
416 2B	N19-0556-08	WASHER	*
AUTOMATIC MECHANISM ASS'Y (D40-0459-05)			
501 2B	-	MAIN CHASSIS	
502 2B	-	SHAFT	
503 3B	-	POSITION GUIDER	
504 3B	-	POSITION HOLDER	
505 3B	-	GEAR	
506 3B	-	CAM	
507 3B	-	CAM HOLDER	
508 3B	-	SLIDER	
509 3B	-	CUSHION	
510 3B	-	ELEVATION ARM	
511 3B	-	RAIL	
512 3B	-	SHAFT	
513 3B	-	PIN	
514 2B	-	START POINTER	
515 2B	-	RETURN HOLDER	
516 2B	-	POINT ADJUSTER	
517 3B	-	COLLAR	
518 3B	-	PULLEY	
519 2B	-	SHAFT	
520 2B	-	RETAINER	
521 3B	-	WASHER(Ø3)	
522 2B	-	WORM GEAR	
523 3B	-	CLUTCH ARM ASSY	
524 3B	-	CLUTCH ARM	
525 3B	-	GEAR SHAFT	

www.hifiengine.com

PARTS LIST

Ref. No. 参照番号	Parts No. 部品番号	Description 部品名／規格	Remarks 備考
526 3B	-	SHAFT	
527 3B	-	GEAR	
528 3B	-	FELT	
529 3B	-	IDLER	
530 3B	-	TIER	
531 3B	-	GEAR	
532 3B	-	SEARCH ARM	
25 3B	D40-0459-05	MECHANISM ASSY	*
533 2B	D13-0205-08	GEAR ASSY	*
534 3B	D14-0217-08	IDLER ASSY	
535 3B	D15-0515-08	MOTOR PULLEY	*
536 3B	D16-0219-08	BELT	
537 3B	D40-0805-08	ELEVATION ARM ASSY	*
538 3B	D33-0007-08	FELT(A)	*
539 3B	G01-0722-08	COMPRESSION SPRING	
540 2B	G01-0723-08	COMPRESSION SPRING(A)	
541 3B	G01-0724-08	TENSION SPRING	
542 3B	G01-0725-08	TENSION SPRING(3)	*
543 3B	G01-0726-08	TENSION SPRING(2)	*
544 3B	G02-0319-08	FLAT SPRING	*
545 3B	G13-0458-04	MOTOR CUSHION	*
546 3B	J19-1918-08	SEARCH HOLDER	*
547 3B	N09-0869-08	SCREW	
548 2B	N09-0870-08	SCREW	
549 3B	N19-0584-08	WASHER	
550 3B	N19-0561-08	RUBBER WASHER	
551 2B	N19-0565-08	WASHER	
553 3B	N19-0567-08	WASHER	
554 3B	N29-0215-08	SPRING STOPPER	
555 2B	N15-1030-46	FLAT WASHER	
556 3B	N19-0540-08	WASHER	
557 3B	T42-0107-05	DC MOTOR	*
558 3B	T94-0058-05	MAGNETIC PLUNGER	*
58 3B	X25-1490-00	SENSOR PCB ASSY	*

www.hifiengine.com

Ref. No. 参照番号	Parts No. 部品番号	Description 部品名／規格	Re-marks 備考
14 3A	A20-1391-13	FRONT PANEL PANEL	*H
14 3A	A20-1417-13	FRONT PANEL ASSY	*T
15 3A	A21-0302-03	DRESSING PANEL	*H
15 3A	A21-0302-03	DRESSING PANEL	FU
15 3A	A21-0302-03	DRESSING PANEL	MX
C1 ,C2	C54-3310-39	CERAMIC 0 01UF P	ET
C1	C90-0145-05	POLYESTER 0 01UF AC125V	H
C1	C91-0023-05	CERAMIC 0 01UF AC250V	UM
C1	C91-0023-05	CERAMIC 0 01UF AC250V	HX
C1	C91-0025-05	CERAMIC 0 01UF AC125V	P
28 1B	D15-0155-13	PULLEY	
29 1B	D15-0154-13	PULLEY	
30 2A	D15-0170-14	PULLEY	
31 2A	D20-0144-03	DIAL SHAFT	

① Exploded view drawing No.
② Position in exploded view.
③ Symblo of new parts
④ Area to which parts are shipped. Example: A20-1390-13 is the part No. of FRONT PANEL ASS'Y for the "K" type products (for U.S.A.).
When this column is blank, it means that the same type of parts (same parts No.) are used for the products shipped to all areas.

CODEs in X11-1590
K: X11-1590-11
U: X11-1590-81
P: X11-1591-01
T: X11-1591-51
E: X11-1592-71

⑤ Reference No. in schematic diagram.
⑥ Abbreviation of "ceramic capacitor".
All capacitors and resistors are listed using abbreviations.
⑦ Abbreviations

* Abbreviations of capacitors (Parts No. with initial letter "C").

ELECTRO ..... Electrolytic capacitor
LL-ELEC ..... Low leak electrolytic capacitor
NP-ELEC ..... Non-pole electrolytic capacitor
MICA ..... Mica capacitor
POLYSTY ..... Polystyrene capacitor
MYLAR ..... Mylar capacitor
CERAMIC ..... Ceramic capacitor
TANTAL ..... Tantalum capacitor
MF ..... Metallized film capacitor
OIL ..... Oil capacitor
The unit "UF" is used in lieu of "μF".

* Abbreviations of resistors (Parts No. with initial letters "R").

RC ..... Carbon composition resistor
RD ..... Carbon film resistor
FL-PROOF RD ..... Flame-proof carbon film resistor
RW ..... Wire wound power resistor
FL-PROOF RS ..... Flame-proof metal oxide film resistor
RN ..... Metal film resistor
2B ..... Rated wattage 1/8W
2E ..... Rated wattage 1/4W
2H ..... Rated wattage 1/2W
3A ..... Rated wattage 1W
3D ..... Rated wattage 2W
3F ..... Rated wattage 3W
3G ..... Rated wattage 4W
3H ..... Rated wattage 5W

All resistor values are indicated with the unit (Ω) omitted.

* Abbreviations common to capacitors and resistors.

C ..... ±0.25pF (Used for capacitors only)
D ..... ±0.5pF (Used for capacitors only)
F ..... ±1%
G ..... ±2%
J ..... ±5%
K ..... ±10%
M ..... ±20%
Z ..... +80%,−20%(Used for capacitors only)
P ..... +100%,−0%(Used for capacitors only)

⑧ Resistors RD (carbon composition resistors) are not listed in the parts list. For values, refer to the schematic diagram.

Note:
Component and circuitry are subject to modification to insure best operation under differing local conditions. This manual is based on, the U.S (K) standard, and provides information on regional circuit modification through use of alternate schematic diagrams, and information on regional component variations through use of parts list.

Region	Code
U.S.A.	K
Canada	P
PX	U
Australia	X
Europe	W
England	T
South Africa	S
Other Areas	M
Audio Club	H

A product of
TRIO-KENWOOD CORPORATION
6-17 3-chome, Aobadai, Meguro-ku, Tokyo 153, Japan

KENWOOD ELECTRONICS, INC.
1315 E Watsoncenter Rd, Carson, California 90745
75 Seaview Drive, Secaucus, New Jersey 07094, U S A
TRIO-KENWOOD ELECTRONICS, N.V.
Leuvensesteenweg 184 B-1930 Zaventem, Belgium
TRIO-KENWOOD ELECTRONICS GmbH
Rudolf-Braas-Str 20, 6056 Heusenstamm, West Germany
TRIO-KENWOOD FRANCE S.A.
5, Boulevard Ney, 75018 Paris, France
TRIO-KENWOOD SVENSKA AB
Kemistvagen 10A,S-183 21 Taby, Sweden
TRIO-KENWOOD (AUSTRALIA) PTY. LTD.
30 Whiting St., Artarmon, N S.W 2064, Australia
KENWOOD & LEE ELECTRONICS, LTD.
Room 501, Wang Kee Building, 5th Floor, 34-37, Connaught Road, Central, Hong Kong

©1979-12 PRINTED IN JAPAN B51-0639-00 (T) 3710