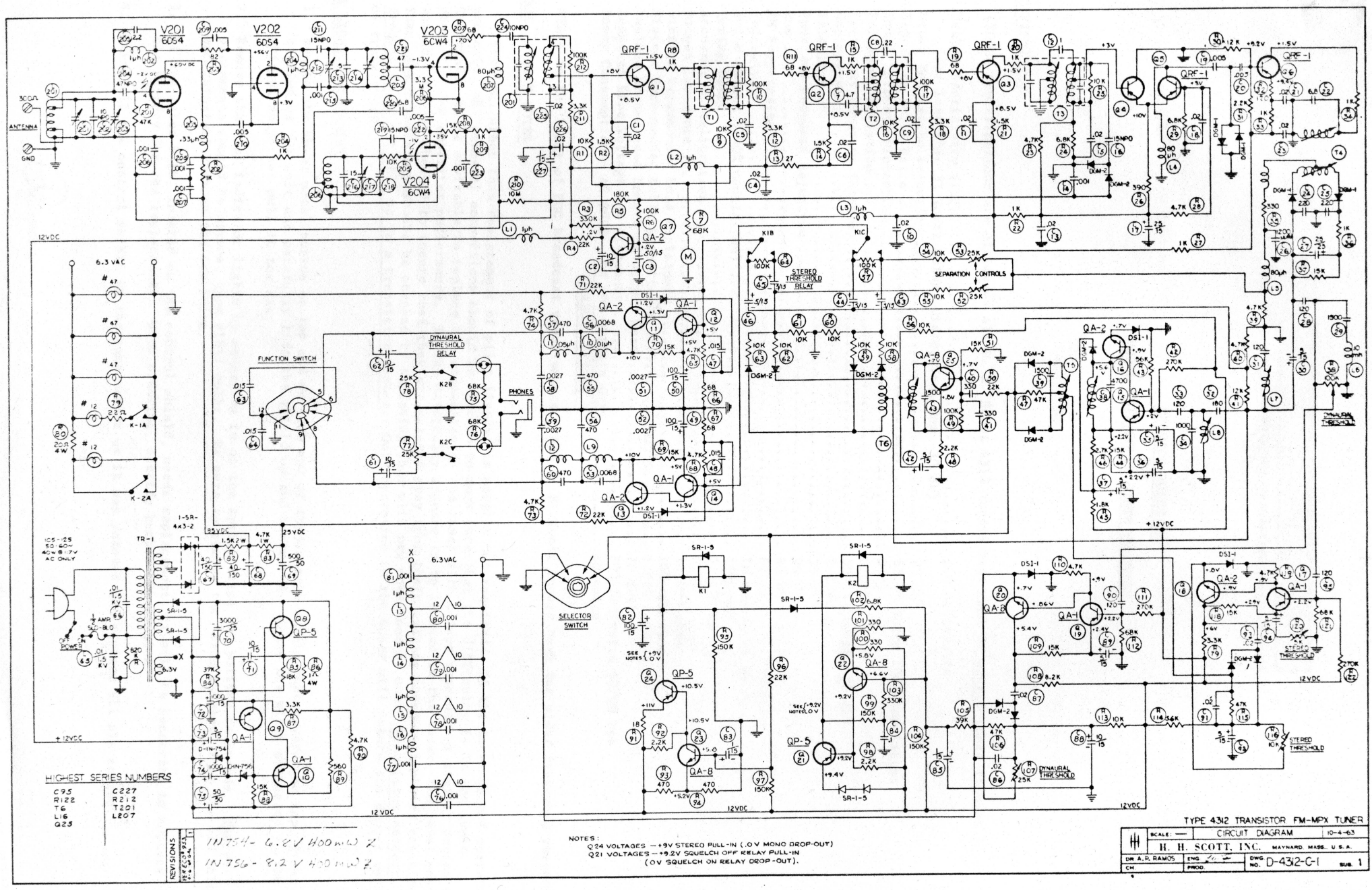
V201 6DS4
V202 6DS4
V203 6CW4
V204 6CW4
300Ω
ANTENNA
GND
QRF-1
QA-1
QA-2
QA-8
QP-5
DSI-1
DGM-1
DGM-2
DYNAURAL THRESHOLD
STEREO THRESHOLD
STEREO THRESHOLD RELAY
SEPARATION CONTROLS
FUNCTION SWITCH
DYNAURAL THRESHOLD RELAY
PHONES
K1B
K1C
K2B
K2C
K-1A
K-2A
6.3 VAC
12VDC
+12VDC
TR-1
105-125 50-60~ 40W @ 117V AC ONLY
POWER
SR-1-5
SELECTOR SWITCH
K1
K2
SEE NOTES
HIGHEST SERIES NUMBERS
C95
R122
T6
L16
Q23
C227
R212
T201
L207
REVISIONS
1N754 - 6.8V 400mW Z
1N756 - 8.2V 400mW Z
NOTES:
Q24 VOLTAGES — +9V STEREO PULL-IN (.0V MONO DROP-OUT)
Q21 VOLTAGES — +9.2V SQUELCH OFF RELAY PULL-IN
(0V SQUELCH ON RELAY DROP-OUT).
TYPE 4312 TRANSISTOR FM-MPX TUNER
SCALE: —
CIRCUIT DIAGRAM
10-4-63
H. H. SCOTT, INC.
MAYNARD, MASS. U.S.A.
DR A.P. RAMOS
ENG
CH
PROD.
DWG NO. D-4312-C-1
SUB. 1