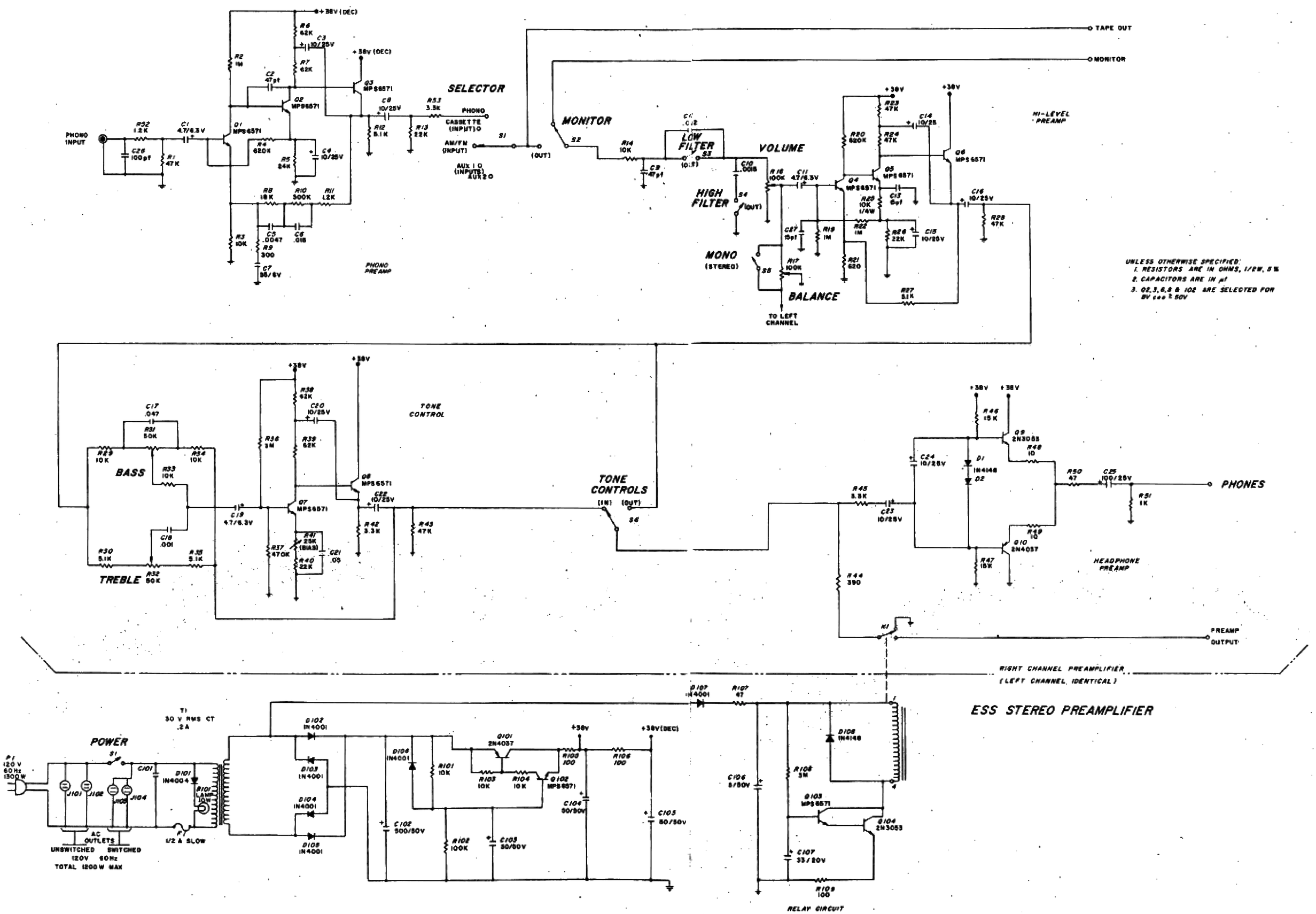
PHONO INPUT
PHONO PREAMP
SELECTOR
PHONO
CASSETTE (INPUT)
AM/FM (INPUT)
AUX 1 O (INPUTS) AUX 2 O
(OUT)
TAPE OUT
MONITOR
MONITOR
LOW FILTER
VOLUME
HIGH FILTER
MONO (STEREO)
BALANCE
TO LEFT CHANNEL
HI-LEVEL PREAMP
UNLESS OTHERWISE SPECIFIED:
1. RESISTORS ARE IN OHMS, 1/2W, 5%
2. CAPACITORS ARE IN µf
3. Q2,3,6,8 & 102 ARE SELECTED FOR BV ceo ≥ 50V
TONE CONTROL
BASS
TREBLE
TONE CONTROLS
(IN) (OUT)
PHONES
HEADPHONE PREAMP
PREAMP OUTPUT
RIGHT CHANNEL PREAMPLIFIER
(LEFT CHANNEL IDENTICAL)
ESS STEREO PREAMPLIFIER
POWER
P1 120 V 60 Hz 1500 W
AC OUTLETS
UNSWITCHED SWITCHED
120V 60Hz
TOTAL 1200W MAX
T1 30 V RMS CT .2 A
1/2 A SLOW
RELAY CIRCUIT