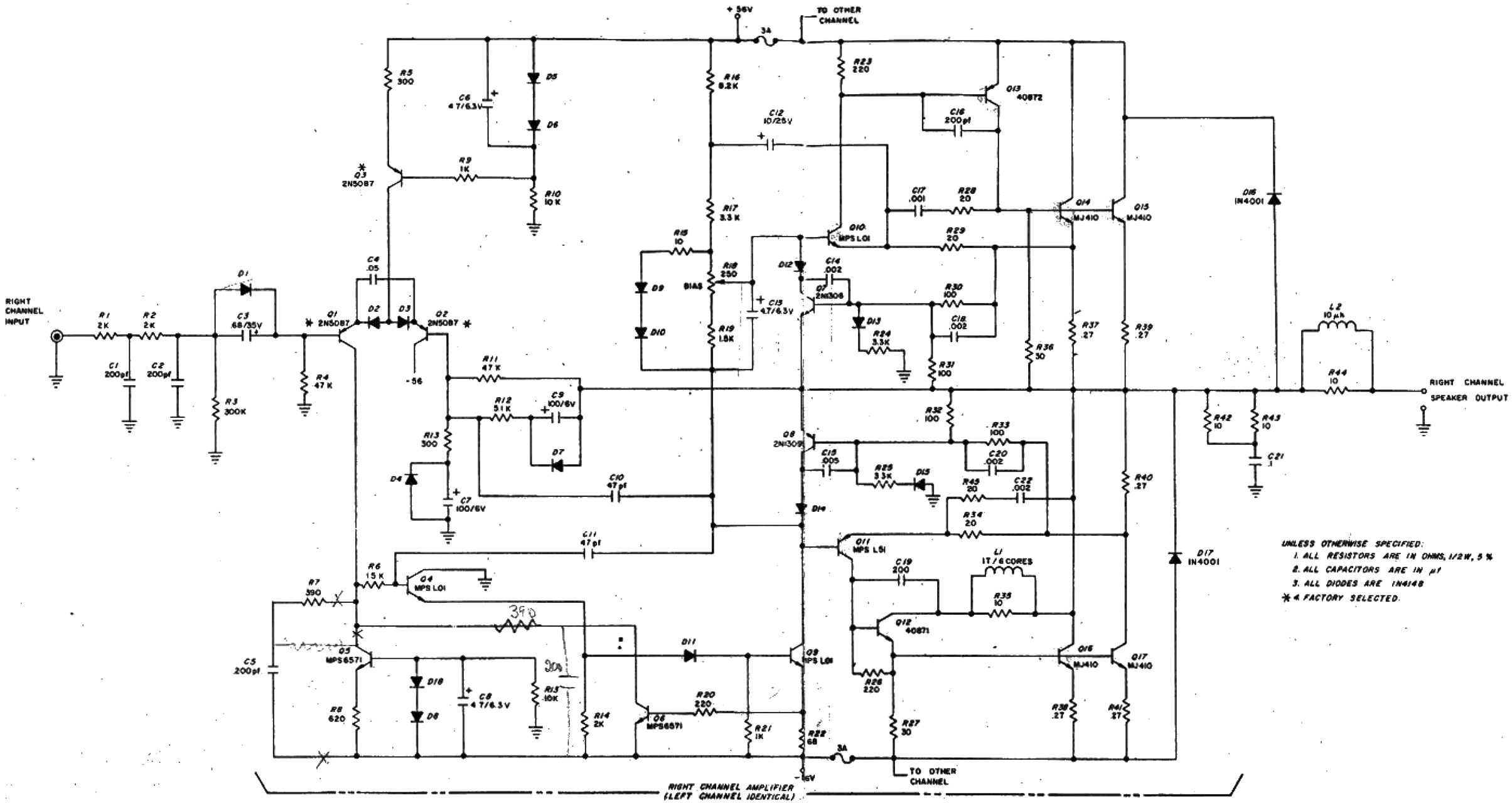

UNLESS OTHERWISE SPECIFIED:
1. ALL RESISTORS ARE IN OHMS, 1/2W, 5%
2. ALL CAPACITORS ARE IN μf
3. ALL DIODES ARE 1N4148
* = FACTORY SELECTED.
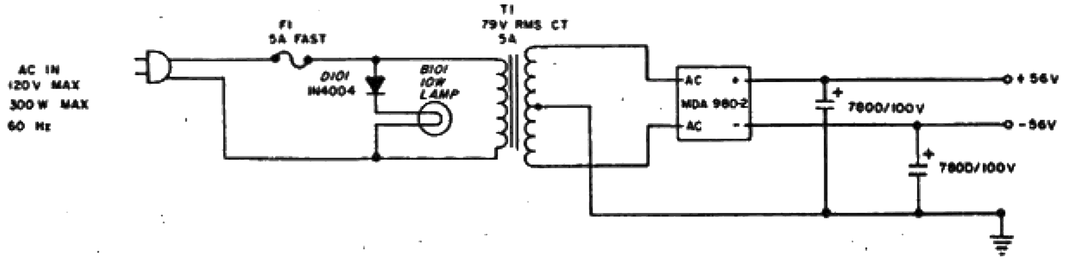
ESS 200 WATT AMPLIFIER