Nov 23/1965
Installed Right
Gray Arm Control
Room T.T.

208-S/16"

VISCOUS DAMPED PROFESSIONAL BROADCAST STEREO TONE ARM

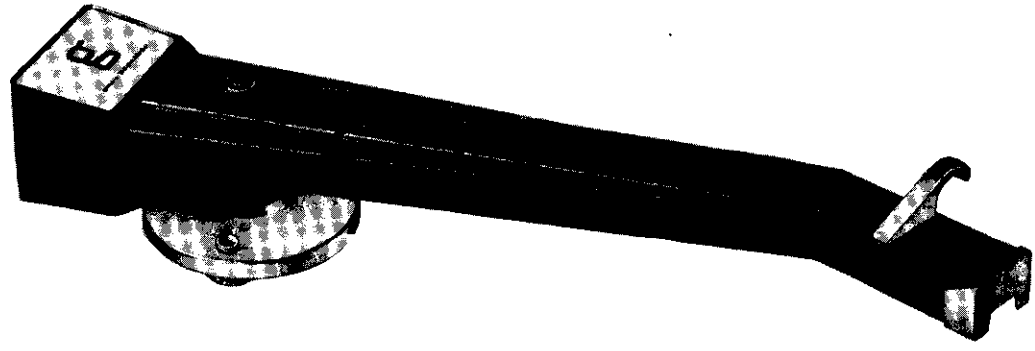

GRAY

INSTALLATION INSTRUCTIONS

INTRODUCTION

The Gray 208-S viscous damped tone arm has been designed to meet both the stereophonic and monophonic requirements of professional and broadcast users. As such, it is a rugged, reliable, and accurate instrument that will give excellent results when used for AM, FM, and TV broadcasting; disc calibration; archiving; dubbing; pressing inspection; cartridge inspection and calibration; and checking instantaneous lacquers.

The goal during the development of the 208-S was to minimize to the vanishing point the effect of the tone arm on reproduced sound while maximizing the number of distortion free plays that could be obtained from a disc. Further, no attempt was made to limit these stringent requirements to present-day records. All discs produced during this century ranging from 16 2/3 R.P.M. to 85 R.P.M. including all known groove configurations - microgroove, standard, vertical, lateral, and stereo - were included within the scope of the project.

Viscous damping plays a key role in the performance of the 208-S. Ideally, when a stylus vibrates due to the musical tones in a record groove, a tone arm should stand perfectly still. But when the stylus is moved toward the center of the record by the spiraling action of the grooves, the tone arm should offer no resistance. Silicone fluids tend to resist motion when they are moved rapidly, but have an insignificant amount of resistance when they are moved slowly. The viscous damping in Gray tone arms makes them stand still when the stylus is moved rapidly but still allows the tone arm to spiral freely to the center of the record.

Tracking error, which occurs because records are mastered with a cutter mounted on an overhead track but played back with an arc motion mechanism, was brought under control by analyzing the potential offset angles of tone arms, the groove velocity of the record at various radii, and the statistical probability of a given record size being played more frequently than others. All three variables were then expressed mathematically and an offset angle chosen which produces the minimal tracking error shown on the attached graph.

Tone arms are subjected to stress vertically, laterally, and tortionally and must be stabilized in all three planes. In the 208-S all of these balance adjustments plus bearing pressure, and tracking force are controlled by gravity and are fully adjustable by the user for each cartridge so as to give maximum possible performance.

In addition, because recorded discs have information on them not only in a vertical or lateral direction but at all possible angles in between, it was necessary to control arm resonance in all modes of vibration. Therefore, the die cast body of the 208-S was designed to prevent any spurious discontinuities above the primary resonance of the moving system itself as related to the compliance of the cartridge used. Finally the geometry of the single bearing, ball and socket viscous damping structure was adjusted to effectively eliminate the fundamental arm resonance.

Detailed instructions for the installation of the 208-S tone arm are given in the following pages along with more complete information about its performance characteristics.

Since an arm of this quality is sure to be used in high quality custom music systems, information has been included where necessary to simplify home installation.

<u>THESE INSTRUCTIONS SHOULD BE READ THOROUGHLY BEFORE INSTALLATION IS ATTEMPED</u>.

SPECIFICATIONS

WEIGHT:	2 7/8 lbs. 1.25 kg.	(Packed)	2 lbs. .95 kg.	(Unpacked)

DIMENSIONS: 2 5/8 in. high, 15 in. long, 2 15/16 in. wide
6.67 cm. high, 38.1 cm. long, 7.4 cm. wide (Unpacked)

3 1/8 in. high, 15 1/2 in. long, 3 1/2 in. wide
7.9 cm. high, 39.4 cm. long, 8.9 cm. wide (Packed)

OVERHANG: 0.5333 in.
13.5 mm. Spindle center to stylus

PIVOT TO SPINDLE: 10 5/8 in.
27 cm.

PIVOT TO BACK OF ARM: 3 13/32 in.
8.7 cm.

RESONANCE: Vertical - 6 cps.
Lateral - 6 cps.
At 4 grams tracking force/5 x 10^{-6} cm./dyne. compliance

TRACKING ERROR:

2.5 in. radius	0°	0'
3.5 in. radius	0°	53'
4.6 in. radius	0°	0'
5.5 in. radius	1°	15'

ARM RESPONSE: ± 1 DB from 5 cycles to top end limit imposed by cartridge used.

208-S

FEATURES

ONE MOVING PART - The tone arm body itself - makes this the simplest tone arm ever devised, or for that matter, theoretically possible.

ONE BEARING situated vertically and gravity coupled to the tone arm body gives constant operating characteristics.

ULTIMATE RELIABILITY is assured by this combination of a single moving part on a single bearing. The ruggedness of this mechanical system is such that a hammer blow would be required to knock it out of adjustment.

TEFLON is utilized in a stabilizer bushing in the pivot assembly to limit the lateral sway of the arm to less than 1 1/2°. Although inoperative while actually playing records, its presence will be appreciated during cuing operations.

MICROMETER DAMPING ADJUSTMENT is provided by a small knob directly over the pivot bearing. The design of this adjustment is such that the arm can be restored to normal operating condition quickly and accurately when required.

AUTOMATIC MEMORY is built into the cartridge slide assembly, so that all adjustments required to use any given cartridge in this arm are included in the slide itself. Whenever a slide assembly is plugged into the 208-S, the following adjustments can be automatically provided for to allow any cartridge to give optimum performance:

> LATERAL BALANCE adjustments, so that all cartridges regardless of their center of gravity ride level in the tone arm.
>
> VERTICAL BALANCE adjustments, so that each cartridge will track at its exact specified pressure within 1/2 gram or in special cases to an eighth of a gram. The range of adjustment is such that almost all the commercially pressed discs ever made can be played at the proper tracking pressure when a cartridge with their specific stylus size is plugged into the arm.
>
> POSITIVE OVERHANG compensation is available so that the variation in stylus to mounting center distance in a non-standard cartridge can be automatically adjusted, for minimum tracking error.
>
> MATCHING NETWORKS to automatically match the electrical characteristics of a wide variety of cartridges to a single preamplifier stage.

MINIMUM TRACKING ERROR is provided by the 208-S. This error reaches a maximum of less than one degree in the innermost groove of a 7" disc. On 10, 12 or 16 inch discs, the maximum error is much less. For details, see the attached graph.

BUILT-IN STANDARDS are included in the design of the 208-S so that exact stylus pressure as well as complete restandardization of the arm's operating parameters can be accomplished in the field without the use of accessory pressure gauges or balances.

DUAL BALANCED LINE operation is standard for broadcast applications with the wiring supplied with the arm. This will be of particular interest to radio stations anticipating stereo broadcasting.

LOW RESONANCE is a result of the basic design of the 208-S. The fundamental undamped resonance of the arm is less than 12 cycles, and the addition of viscous damping provides performance from the 208-S tone arm which is capable of meeting the same stringent frequency response and distortion specifications as fine professional audio equipment.

CONVERSION KITS are available for most 108-C tone arms, so that stations wishing to standardize on the new modular cartridge slides system of the 208-S, may do so when the 208-S tone arm is put into service.

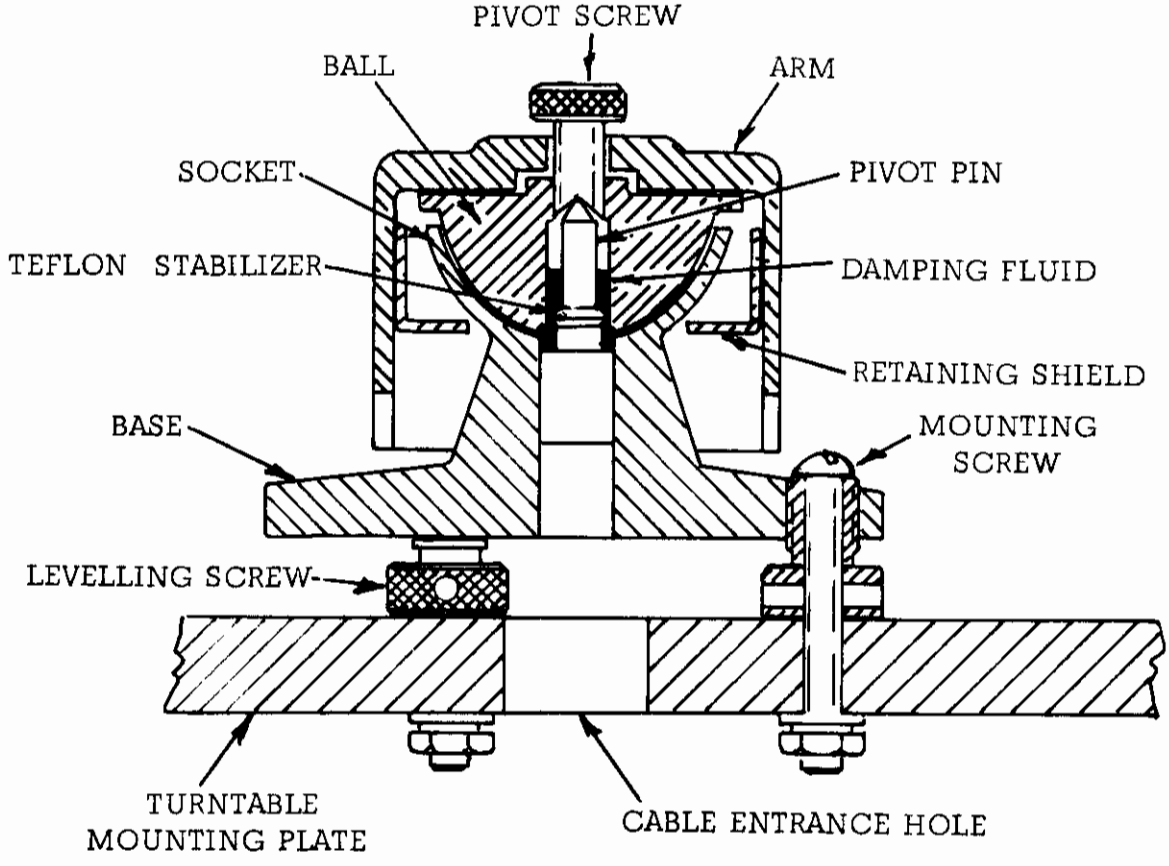

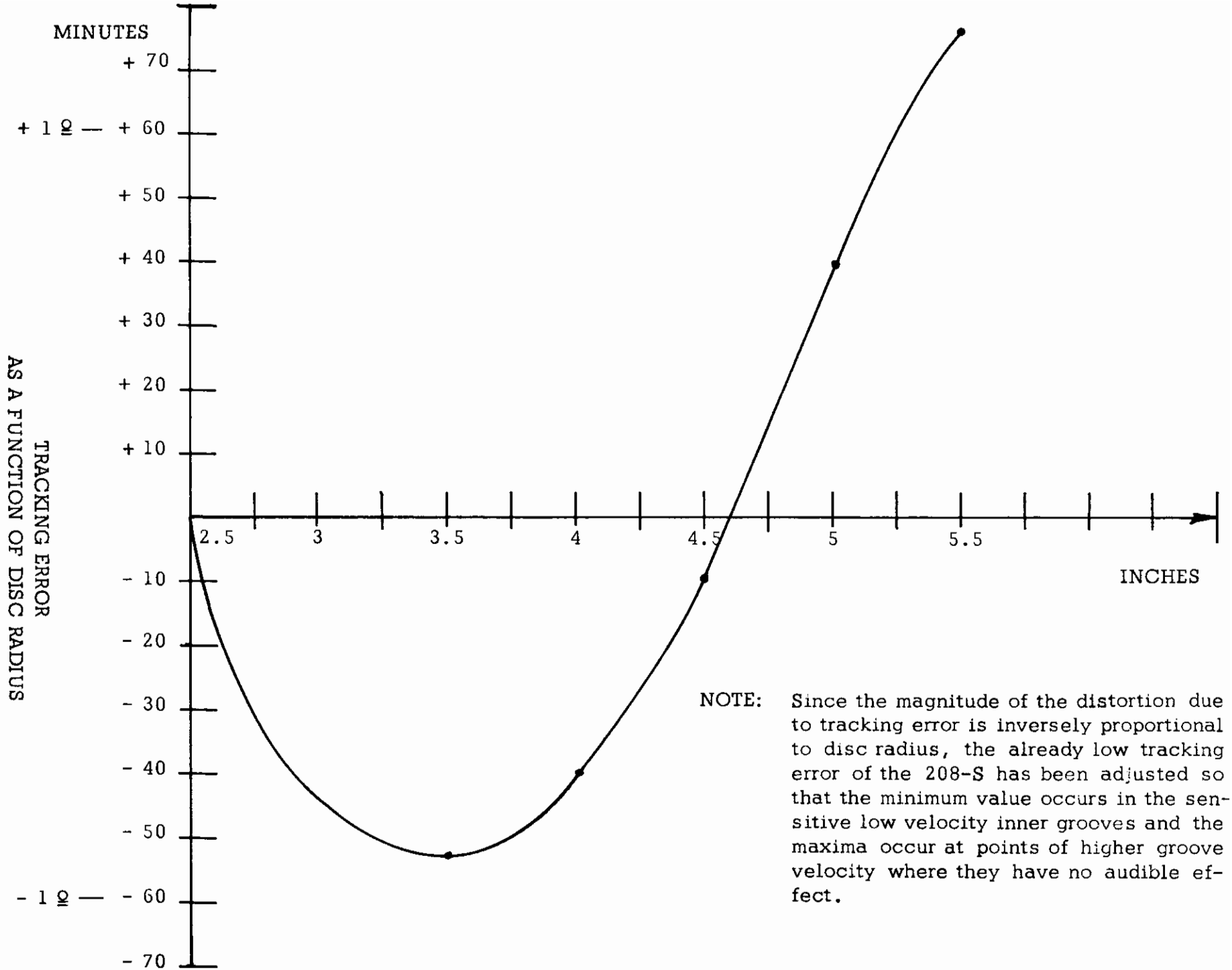

NOTE: Since the magnitude of the distortion due to tracking error is inversely proportional to disc radius, the already low tracking error of the 208-S has been adjusted so that the minimum value occurs in the sensitive low velocity inner grooves and the maxima occur at points of higher groove velocity where they have no audible effect.

208-S
INSTALLATION

GENERAL: The following steps should be followed in order for best results.

1. Unpacking
2. Mounting
3. Wiring
4. Insertion of viscous fluid
5. Cartridge installation
6. Final check

NOTE: Be sure turntable platter is perfectly level at all times.

UNPACKING: Carefully remove the 208-S from its shipping container and check all small parts against the list at the back of this manual. Do not discard any packing material until all parts are accounted for.

MOUNTING: For convenient operation, the 208-S should be installed to the right of the turntable equidistant from the front and back of the cabinet. If a high fidelity type turntable is used, care should be taken that the drive motor is located as far from the end of the tone arm as possible to minimize hum.

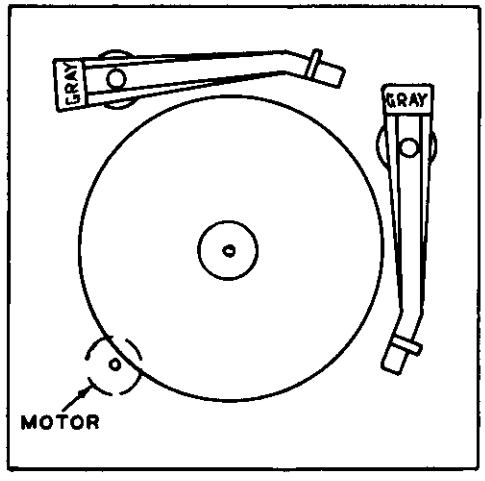

16 INCH TURNTABLE

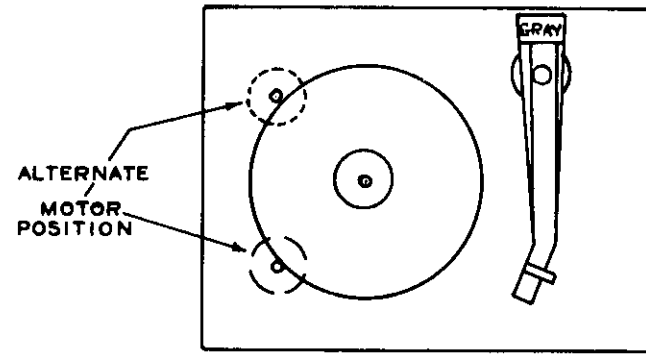

12 INCH TURNTABLE

The pivot point of the 208-S should be located exactly 10 5/8 inches from the center of the turntable spindle. Ideally, two of the three adjustable feet on the base of the tone arm should be oriented so that their center line is parallel with the front of the turntable cabinet. The adjustable foot nearest the hole drilled in the base to accept the tone arm wire should be on the right. The shielded cable should be dressed, loosely, clockwise around the back of the base and through this hole.

The three mounting holes and the central hole to accept the tone arm wire should be 1/4 inch in diameter to allow for final adjustment of the pivot to spindle distance. The attached template may be used to mark the location of these mount-

ing holes, however, it should not be used to locate the arm pivot point.

Mount the arm base in position using the 8-32 machine screws, nuts, and washers provided. These screws should be installed only finger tight until a final check is made of the overall installation.

Set the tone arm on its rest which should be loosely placed on the turntable mounting board. Slide the rest toward the rear of the arm until a snug fit is attained, and then move it forward 3/8 of an inch. The arm rest should be adjusted from left to right until a line drawn from its center through the pivot center is parallel with the side of the turntable cabinet. This location should be marked and three 1/8 inch holes drilled for mounting. Mount the tone arm rest loosely in position using the 5-40 screws, nuts, and washers provided.

The height adjusting feet on the tone arm base should be adjusted so that, with the tone arm level, the top of the tone arm is exactly 1 1/8 inches above the surface of a record placed on the turntable platter. When this adjustment is completed, the tone arm base should be the same height above the turntable mounting board at the location of each of the three level adjusting feet. The height of the tone arm rest should then be adjusted so that the tone arm is level in the rest position.

WIRING: The following color code is standard for all Gray tone arms:

Left Channel	Green	Right Channel	Red
Left Channel Ground	White	Right Channel Ground	Black

By convention, the left channel is used for monaural cartridges. Special circumstances are covered under "Cartridge Installation".

To satisfy the requirements of high quality stereo reproduction or balanced line operation, the shielded braid from the tone arm is wired to function only as an electrostatic shield and does not carry any signals from the cartridge. For normal installation in high fidelity systems, the pictoral shows proper connections.

NOTE: All wiring required underneath the turntable should be completed before viscous damping fluid is inserted.

INSERTION OF VISCOUS FLUID: The viscous fluid is contained in the small metal tube and is inserted through the pivot screw hole. The back of the tone arm should be raised as high as possible by inserting a small object under the lead weight at the rear while the arm is on its rest. The vertical motion of the arm is limited by an internal stop. With the arm in this raised position, insert approximately 2/3 of the tube of viscous fluid by placing the neck of the tube tightly in the pivot screw hole and squeezing gently.

When the proper amount of fluid has been inserted, slowly remove the tube vertically and allow the external residue of fluid from the tube to drip into the pivot screw hole. The arm should be left in this raised position for at least 30 minutes before the pivot screw is re-inserted. Care must be taken when replacing the pivot screw that the fine threads engage properly.

The pivot screw should be turned down as far as it will go without forcing and then backed off two or three turns before removing the support at the rear of the tone arm. Leave the pivot screw in this position until the final check of the installation is made.

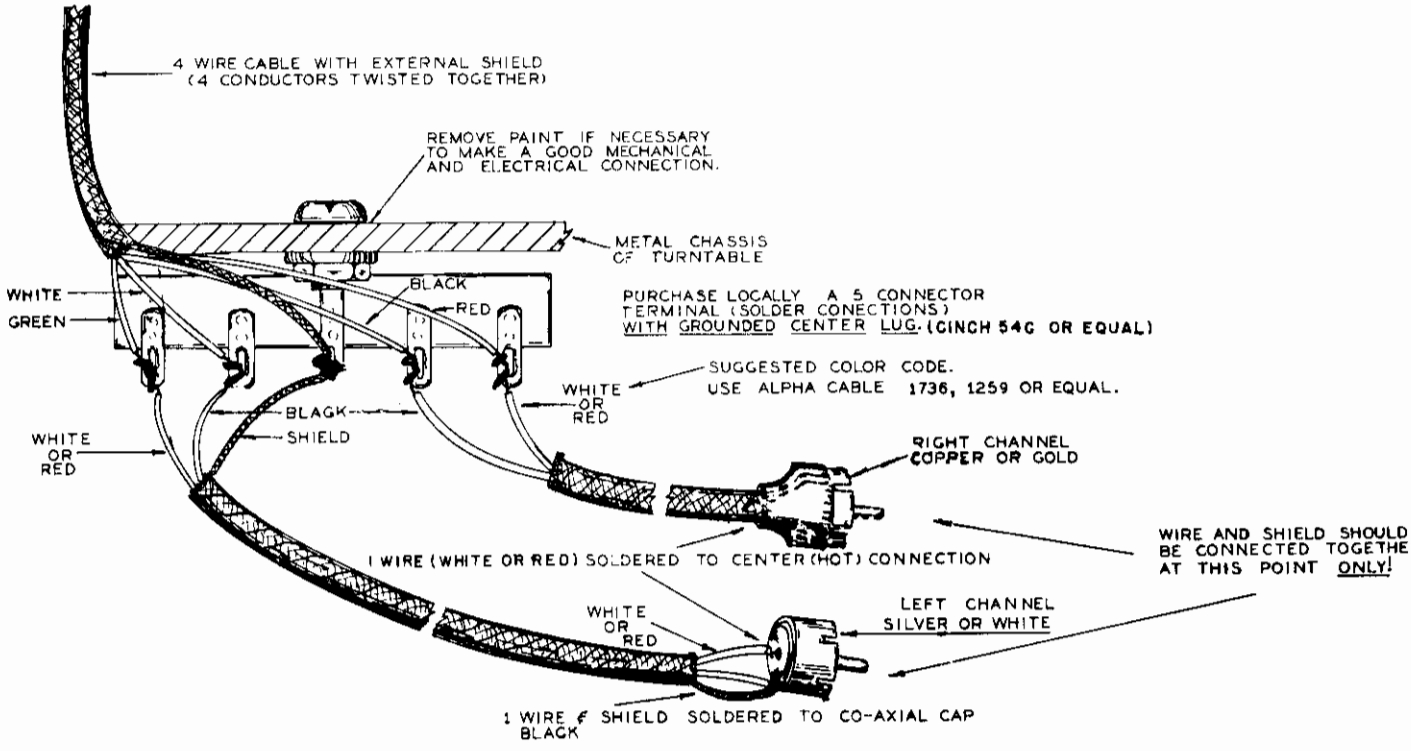

CARTRIDGE MATRIXING CIRCUIT

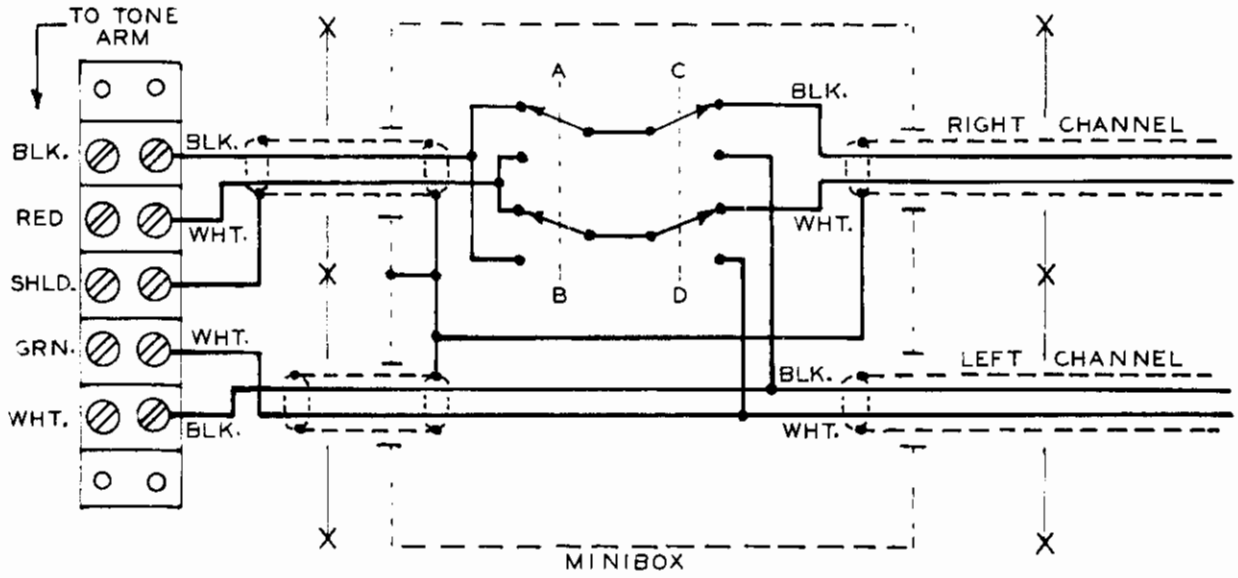

SWITCH POSITION		FUNCTION
A	C	STEREO CARTRIDGE — STEREO SOUND MONO CARTRIDGE — LEFT CHANNEL
A	D	STEREO CARTRIDGE — MONO SOUND
B	C	STEREO CARTRIDGE — STEREO SOUND RIGHT CHANNEL 180° OUT OF PHASE
B	D	STEREO CARTRIDGE — MONO SOUND VERTICAL CUT RECORDS

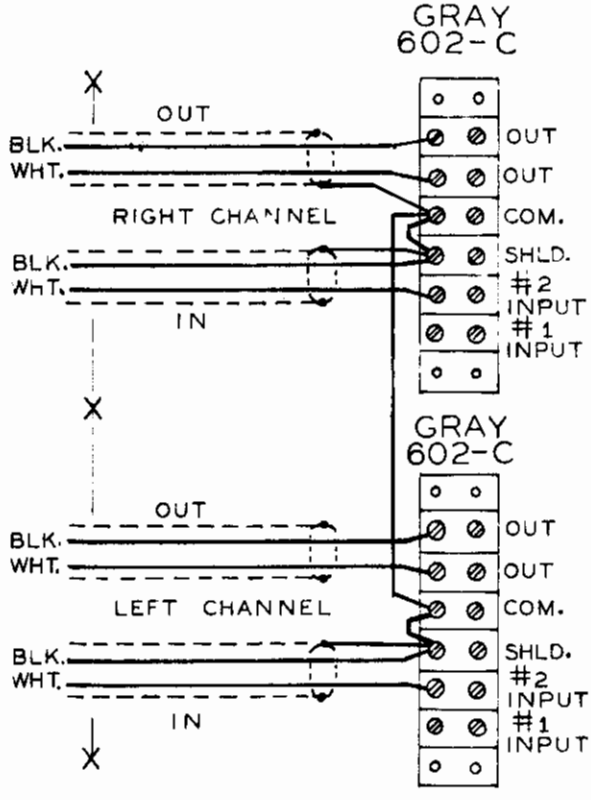

RADIO STATION INPUT

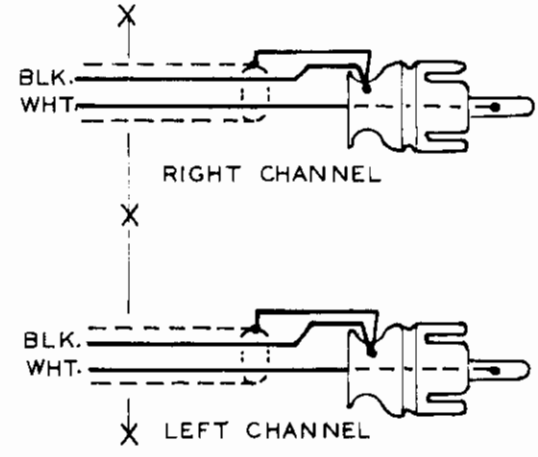

HI-FI SYSTEM INPUT

NOTE: USE BELDEN 8522 OR EQUIVALENT IN ALL CIRCUITS.

208-S
CARTRIDGE INSTALLATION

CONNECTIONS:	Left Channel - Green	Right Channel - Red
	Left Ground - White	Right Ground - Black

The clips provided are designed to mate with the pins on most cartridges. In the case of cartridges having non-standard pin dimensions, the clips supplied with the cartridge should be used.

The external connection provided by some manufacturers between the cartridge shell and one ground pin should be removed before attaching the clips, since it can cause a ground loop.

If necessary, bend the flat portion of the cartridge clip into a "U" shape using a pair of needle nose pliers to allow it to clear the back of the male contact block.

STEREO CARTRIDGE - STEREO SYSTEM: Use all four clips

MONO CARTRIDGE - MONO SYSTEM: Use left channel cartridge clips and solder both right channel leads to left channel ground.

MONO CARTRIDGE - STEREO SYSTEM: Wire the left and right channels in parallel to a single pair of cartridge clips.

MONO CARTRIDGE - SINGLE STEREO CHANNEL: Connect the left channel clips to the cartridge and solder the two wires for the right channel together. Insulate.

STEREO CARTRIDGE - VERTICAL CUT RECORDS: Wire the coils in parallel, out of phase, and then install the same way as a monophonic cartridge.

TRACKING PRESSURE: Mount the cartridge in the slide without weights and plug it into the arm. Swing the tone arm over the turntable platter. The front of the arm should raise up in the air because of insufficient weight.

Place the modular weights, one at a time, on top of the tone arm in front of the finger lift until the tone arm just balances in an approximately level position.

Add an additional number of weights equal to the desired tracking force. (Each modular weight weighs exactly 1 gram). The total number of weights will then be the exact number required to give the desired tracking pressure.

Install, placing an equal number of weights over each mounting stud, using one or more rubber spacers as retainers. Re-assemble and insert slide assembly in arm.

With the stylus in a record groove, inspect the front of the tone arm, head on, to see if it is parallel with the record. If not, individual modular weights may be moved from one stud to the other until the tone arm balances parallel to the record.

Next, with the cartridge installed in the tone arm and the stylus in a record groove, check to see if the top of the tone arm is 1 1/8 inches ± a 16th of an inch above the record. If it is not high enough, the stud extenders provided in the hardware kit should be placed between the cartridge and the cartridge slide until proper height is achieved.

This procedure should be repeated for each cartridge to be used in the 208-S. When all cartridges have been mounted in individual cartridge slides according to instructions all adjustments will be made automatically each time a cartridge is plugged into the arm.

FINAL CHECK: Be certain that the turntable spindle center to pivot point distance is exactly 10 5/8 inches. When this distance is correct, place the tone arm, with the cartridge installed, on a record and press first on the right side of the tone arm at the location of the pivot screw and then on the left side allowing a moments pause in between for the tone arm to level itself. The arm should tilt an equal amount in each case. If it does not, the relative heights of the front-right and rear leveling screws should be adjusted until the arm does tilt equally. This insures that the Teflon bushing in the pivot assembly will only function while the tone arm is being placed on or removed from a record. When the arm is properly adjusted, the Teflon bushing will not contact the side walls of the viscous damping ball while actually playing a record.

Check the front to back level again, then firmly tighten the three mounting screws on the tone arm base.

Check the height of the tone arm rest, then tighten its mounting screws firmly.

Finally, adjust the pivot screw for minimum damping. (NOTE: Turn clockwise to decrease the viscous damping and turn counterclockwise to increase viscous damping). To test damping action, lift the 208-S as high as it will go in the air over the space between the edge of the turntable and the tone arm rest and allow it to drop into your hand with the cartridge installed. It should take approximately 1/2 second to fall through this distance. Re-check after the arm has been allowed to stand overnight.

Your 208-S tone arm is now ready to give you many years of trouble-free service. Pleasant listening.

SPECIAL INSTRUCTIONS

HUM REDUCTION: If one stereo channel is found to have significantly more hum than the other, the wiring of the terminal strip should be double checked to make certain that there is no accidental connection between either the black or white leads and the cable shield, the tone arm, or the turntable.

If the difficulty is not located at the terminal strip, the cartridge should be checked by a competent serviceman to see if the cartridge case itself is internally grounded to one of its connecting pins. If there is no serviceman near you, write to the manufacturer for details about the internal wiring of your cartridge. In any event, the cartridge should be returned to the manufacturer to have this ground connection removed, since it is undesirable and unnecessary in professional tone arms.

A second source of hum, which can also limit the frequency response of your record player, is the use of long leads. If you find it necessary to use leads from the terminal strip of your tone arm to your preamp. that are longer than three feet, it is recommended that you use antenna cables such as RG-59/U. Up to 10 feet of this cable may be safely used in most installations, and with low impedance cartridges up to 20 feet may be installed. The center conductor should be connected to the green tone arm lead for the left channel and the red tone arm lead for the right channel. The left channel shield should be connected to the white tone arm lead and the right channel shield to the black tone arm lead. The electrostatic ground from the turntable as well as the shielded braid of the tone arm wire should be brought out as a separate piece of #18 stranded wire and connected to a solid ground point on the preamplifier chassis.

If the 208-S is mounted on a turntable with a metal mounting board, hum may sometimes be reduced by disconnecting the shielded braid of the tone arm wire from the ground connection on the terminal strip. If the 208-S is mounted on a wooden turntable mounting board, be sure that a good ground is made between the ground tie point on the terminal strip and the metal body of the turntable base.

ARM ACTION: If the 208-S shows a marked tendancy to swing to either the left or right when allowed to fall naturally from its uppermost position, the wire from the tone arm to the base should be checked and any tendancy toward binding corrected. If the cable is not binding, a new pivot screw should be ordered. This condition will only occur when an arm has been drastically mistreated.

HEAVY CARTRIDGES: If the particular cartridge you choose to use in your 208-S is found to be so heavy that the tone arm cannot be balanced by the procedure outlined under "Cartridge Installation", the two screws underneath the front of the tone arm body which hold the retaining shield in place should be removed and the retaining shield itself taken out of the arm. This will allow you to lift the 208-S arm body free of its base so that the position of the lead weight at the rear of the tone arm may be adjusted.

The two machine screws which attach the lead weight to the body of the arm may be loosened slightly and the arm returned to its base. It may now be moved freely back and forth as well as left and right until the heavy cartridge has been exactly balanced. If the lead weight is held firmly as the tone arm body is turned over, the machine screws may be re-tightened to hold it permanently in this position. If the removal and replacement of the tone arm body is accomplished rapidly, little or no spillage of the viscous fluid will occur.

The retaining shield may now be screwed back into the tone arm body and the proper number of modular weights added to the heavy cartridge to allow it to track at proper pressure. Any other cartridge used with the tone arm should now be re-balanced according to the procedure outlined in "Cartridge Installation".

OVERHANG COMPENSATION: Almost all cartridges manufactured in the United States when installed in the standard cartridge slide assembly provided with the 208-S will be found to have their stylus located .533 inches beyond the center of the turntable spindle when measured on a line drawn from the center of the arm pivot point through the turntable spindle. If this is not the case, do not adjust the pivot screw to turntable spindle distance to achieve the .533 inch overhang, since this will increase tracking error.

If you desire to use a cartridge in which the mounting center to stylus distance is non-standard, a special custom slide assembly may be ordered from Gray Research and Development Company's Service Department.

FIELD RECALIBRATION: May be accomplished by installing seven modular weights over each mounting stud of a cartridge slide (less cartridge) with the 1/4 inch screws provided. One additional modular weight (for a total of fifteen) placed between the mounting screws will hold the other weights in position. With this dummy load plugged into the arm, follow the procedure under "Heavy Cartridges" to properly position the counterbalance.

MISCELLANEOUS: If you have any problems or difficulties properly installing your 208-S tone arm, please feel free to contact Gray Research and Development Co. Div., Service Department; Post Office Box 296, Hartford 1, Connecticut, U.S.A. at any time. We are interested in helping you obtain maximum performance from your Gray 208-S.

Comments and suggestions are always appreciated.

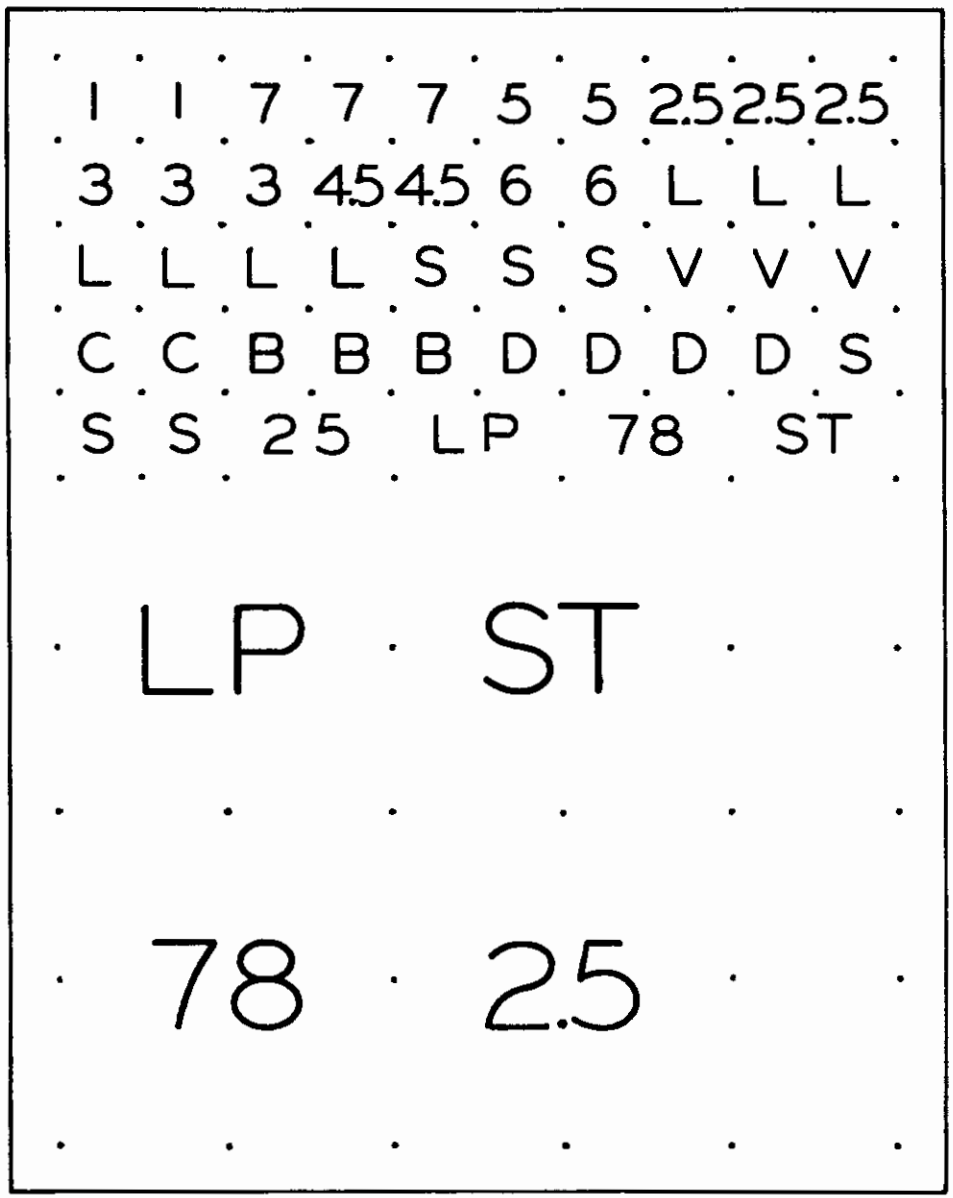

LABEL SET P-75787

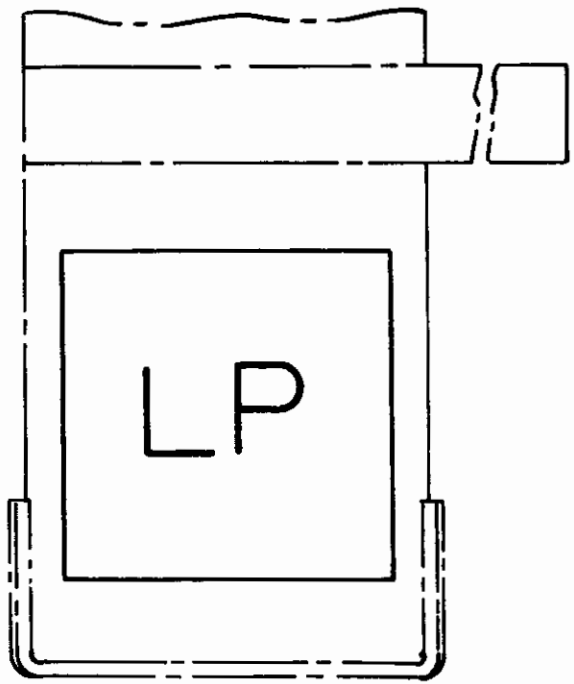

LARGE LABEL INSTALLED
ON TOP FRONT OF ARM

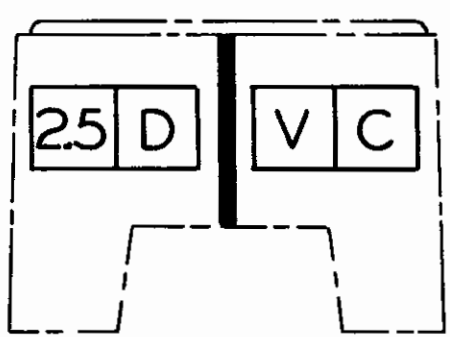

SMALL LABELS USED TO
CODE CARTRIDGE SLIDE

LABEL SET CODE

The large labels are designed to mount on top of the arm in front of the finger lift in cases where the arm will always have the same cartridge installed.

LP - Long Play
ST - Stereo
78 - 78 R.P.M.
2.5 - 33 1/3 Transcription

The medium sized labels are designed to mount on the front of the cartridge slide using the same code.

The small labels are also designed to mount on the front of the cartridge slide in a row of four, as follows from left to right:

I)
1 - 1 mil stylus (LP)
.7 - .7 mil stylus (stereo, special-LP)
.5 - .5 mil stylus (special-LP/stereo)
2.5 - 2.5 mil stylus (transcriptions, some 78's)
3 - 3 mil stylus (most 78's)
4.5 - 4.5 mil stylus (vertical cut 78's - Pathe)
6 - 6 mil stylus (vertical cut 78's - Edison)

II)
D - Diamond
S - Sapphire

III)
L - Lateral cut records
V - Vertical cut records
S - Stereo cut records

IV)
C - Cone tip stylus
B - Ball tip stylus

A typical example would be: 2.5/D - V/C

which stands for a 2 1/2 mil diamond stylus in a cartridge for vertical cut records with a cone shaped tip or, in other words, a vertical cut broadcast transcription.

Gray Research and Development Co. Div.
P. O. Box 296
Hartford 1, Connecticut

PARTS LIST

208-S

PART NO.		DESCRIPTION	QTY./ARM	
S-75743		Cartridge Slide		1
S-75763		Cartridge Mounting Hardware		1
S-75799		Standard Cartridge Weight Kit		1
	75749	Modular Weight	20	
	75750	Compressible Spacer	4	
75751		Foot Spacer		3
S-75051		Viscous Fluid		1
S-75041		Tone Arm Rest		1
P-75024		Pivot Screw		1
P-75803		Base Mounting Screw (8-32)		3
P-22430		Base Mounting Nut		3
P-28205		Base Mounting Washer		3
P-75802		Rest Mounting Screw (5-40)		3
P-28928		Rest Mounting Nut		3
P-14118		Rest Mounting Washer		3
P-75787		Label Set		1

208-S/G

S-75800		G.E. Turn-Around Mounting Hardware		1
	75797	G.E. Turn-Around Cartridge Weight	1	
	P-75068	Screw 3-48 x 1/2"	2	

8-S

S-75792		Standard Accessory Cartridge Slide		1
	S-75743	Cartridge Slide	1	
	S-75763	Standard Cartridge Mounting Kit	1	
	S-75799	Standard Cartridge Weight Kit	1	
	75793	Instruction Sheet	1	

8-S/G

S-75801		G.E. Accessory Cartridge Slide		1
	S-75743	Cartridge Slide	1	
	S-75800	G.E. Turn-Around Mounting Hardware	1	
	75798	Instruction Supplement	1	

208-S/G

INSTRUCTION SUPPLEMENT

INTRODUCTION: The 208-S/G is a special version of the new 208-S tone arm, and has identical performance characteristics. The only change has been the inclusion of a milled slot to allow the insertion and removal of a G.E. VR-II broadcast turn-around cartridge without detatching it from the slide. All 208-S/G tone arms are calibrated at the factory with the same standard weight assemblies used for the 208-S. Therefore, you will find that single play cartridges mounted on slides for use in the 208-S tone arm will plug directly into the 208-S/G and operate perfectly, since all adjustments for lateral balance, stylus pressure, etc. will be made automatically. Needless to say, a G.E. turn-around cartridge will not plug directly into the 208-S.

HARDWARE REQUIRED: The two mounting screws, the cartridge slide and the cartridge weight supplied by Gray for use with the 208-S/G are specifically designed to mount the G.E. VR-II broadcast turn-around cartridge. In addition, the two "U" shaped adaptors supplied by G.E. to extend the mounting centers of their cartridge should be used along with the 1/2 inch long red plastic knob for reversing the stylus assembly.

ELECTRICAL CONNECTIONS: The electrostatic shield connection from the top of the G.E. cartridge body to one of the terminal pins should be removed completely, since its presence will cause ground loops. The narrowest diameter pins supplied by G.E. should be used for cartridge connection. If permanent monophonic operation is desired into a Gray 602-C equalizer, use the following color code. The green lead is left-channel hot. The white lead is left-channel ground. The red and black leads should be soldered together and then to the white lead. Next, connect the green and white leads from the tone arm to the input terminals of the 602-C equalizer. The shielded braid from the tone arm may be brought to the ground tie point on the equalizer or brought out separately to the main studio ground bus.

MECHANICAL ASSEMBLY: Hold the cartridge slide upside down with the male pin plug pointed down, and place the cartridge weight over the mounting studs so that the missing corner is toward the front left of the cartridge slide. Fasten the cartridge in place using the 3-48 machine screw supplied by Gray and the "U" shaped mounting center adaptors supplied by G.E. The top of the cartridge body should rest solidly against the cartridge weight. Mount the red knob on the stylus shaft and check for clearance around hole in the cartridge slide. If the red knob binds, move the cartridge slightly on its mounting screws.

NOTE: If it is desired to use monaural cartridges in the 208-S/G tone arm, purchase a model 8-S Standard Accessory Cartridge Assembly from your dealer. If additional G.E. turn-around broadcast cartridges are to be mounted, purchase a model 8-S/G G.E. Accessory Cartridge Slide Assembly.

Gray Research and Development Co. Div.
P. O. Box 296
Hartford 1, Connecticut