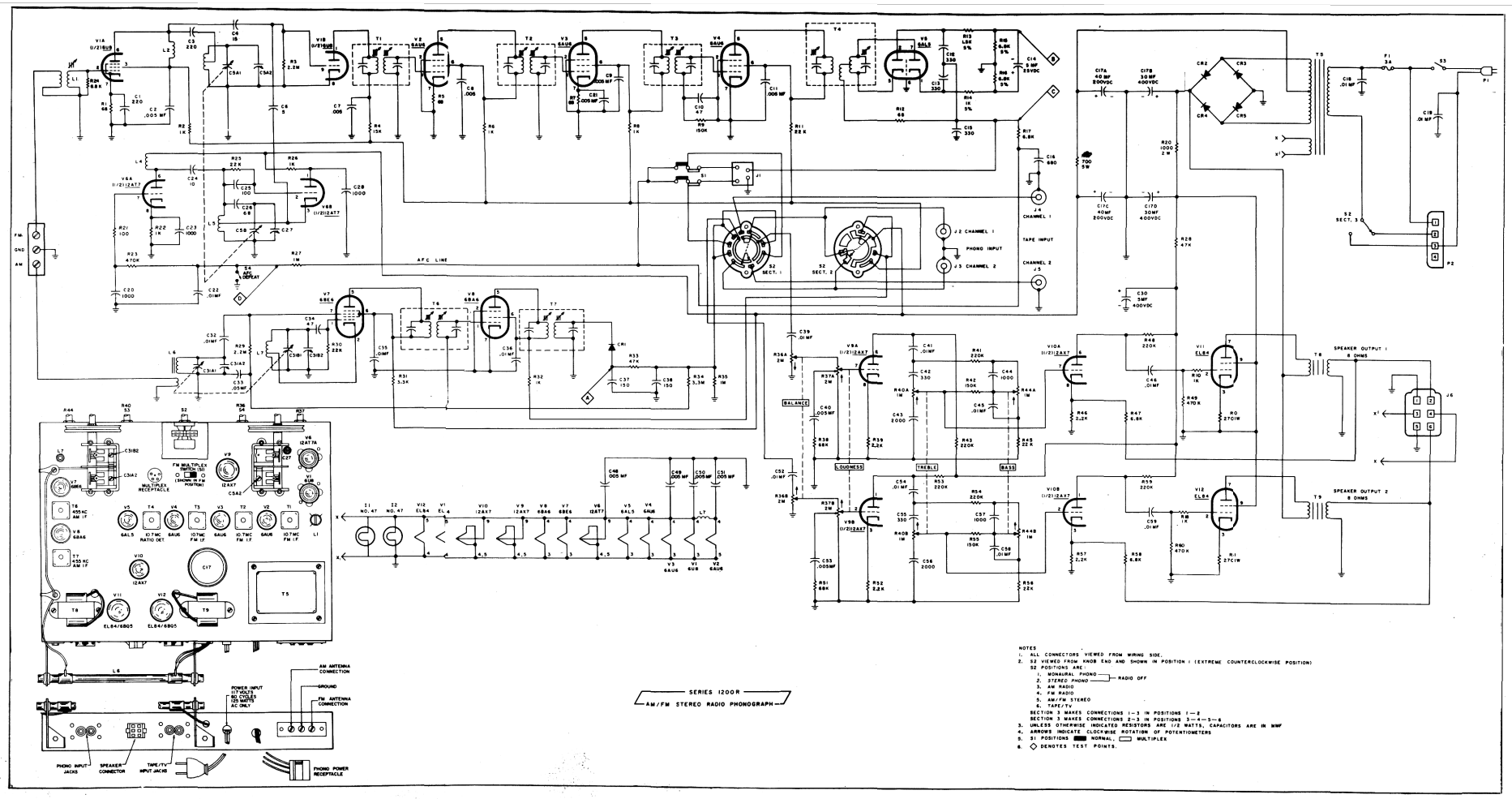

NOTES

1. ALL CONNECTORS VIEWED FROM WIRING SIDE.
2. S2 VIEWED FROM KNOB END AND SHOWN IN POSITION 1 (EXTREME COUNTERCLOCKWISE POSITION)
   S2 POSITIONS ARE:
   1. MONAURAL PHONO — RADIO OFF
   2. STEREO PHONO
   3. AM RADIO
   4. FM RADIO
   5. AM/FM STEREO
   6. TAPE/TV
   SECTION 3 MAKES CONNECTIONS 1—3 IN POSITIONS 1—2
   SECTION 3 MAKES CONNECTIONS 2—3 IN POSITIONS 3—4—5—6
3. UNLESS OTHERWISE INDICATED RESISTORS ARE 1/2 WATTS, CAPACITORS ARE IN MMF
4. ARROWS INDICATE CLOCKWISE ROTATION OF POTENTIOMETERS
5. S1 POSITIONS ▬ NORMAL, ▭ MULTIPLEX
6. ◇ DENOTES TEST POINTS.