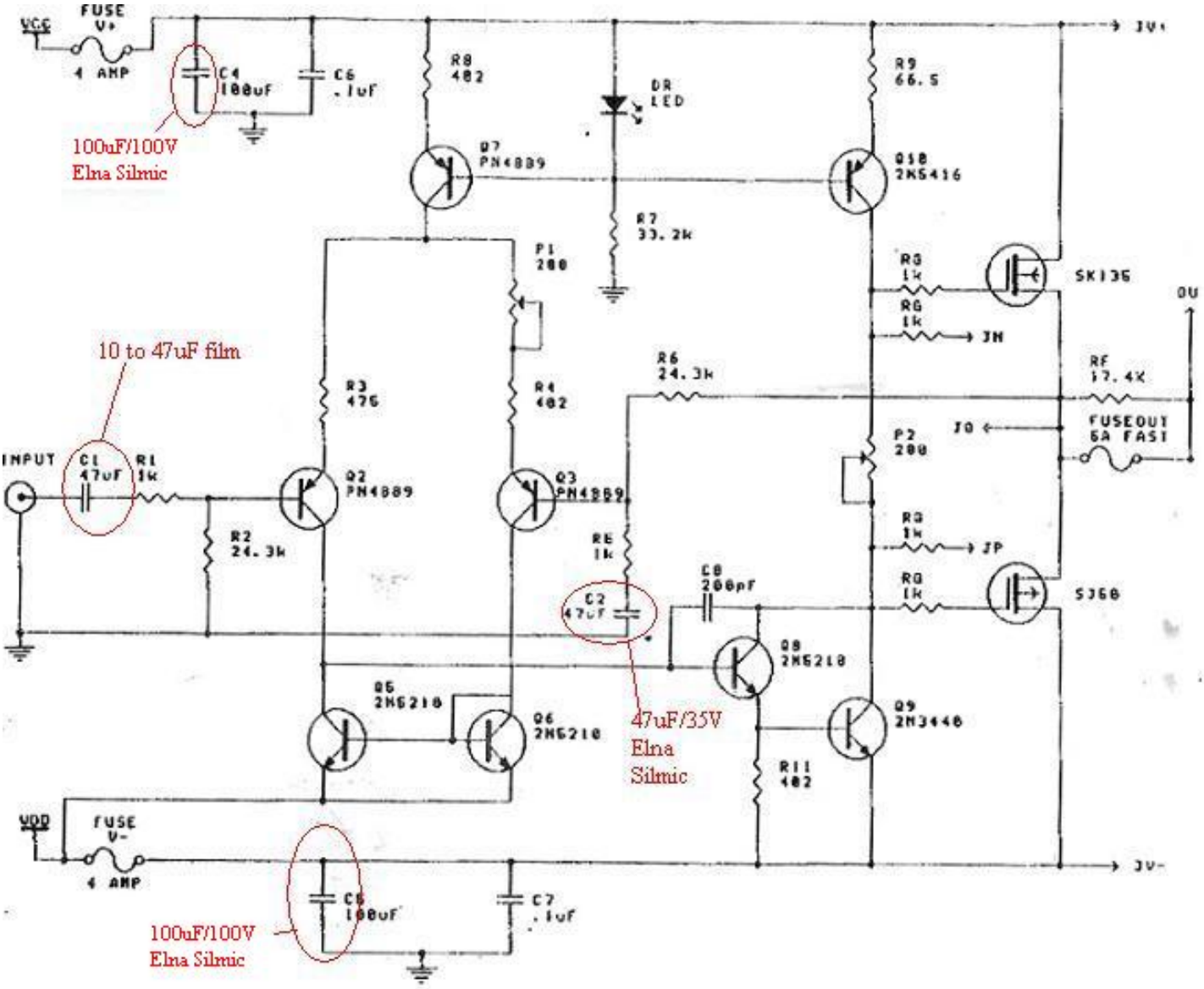
VCC
FUSE
V+
4 AMP
C4
100uF
C6
.1uF
R8
402
DR
LED
R9
66.5
Q7
PN4889
Q10
2N5416
R7
33.2k
P1
200
R3
476
R4
402
R5
24.3k
R10
1k
SK135
0V
10 to 47uF film
INPUT
C1
47uF
R1
1k
Q2
PN4889
Q3
PN4889
R2
24.3k
R6
1k
C2
47uF
C8
200pF
Q8
2N5210
Q5
2N5210
Q6
2N5210
47uF/35V
Elna
Silmic
Q9
2N3440
R11
402
RF
17.4K
FUSEOUT
6A FAST
P2
200
R9
1k
SJ60
VDD
FUSE
V-
4 AMP
C5
100uF
C7
.1uF
100uF/100V
Elna Silmic