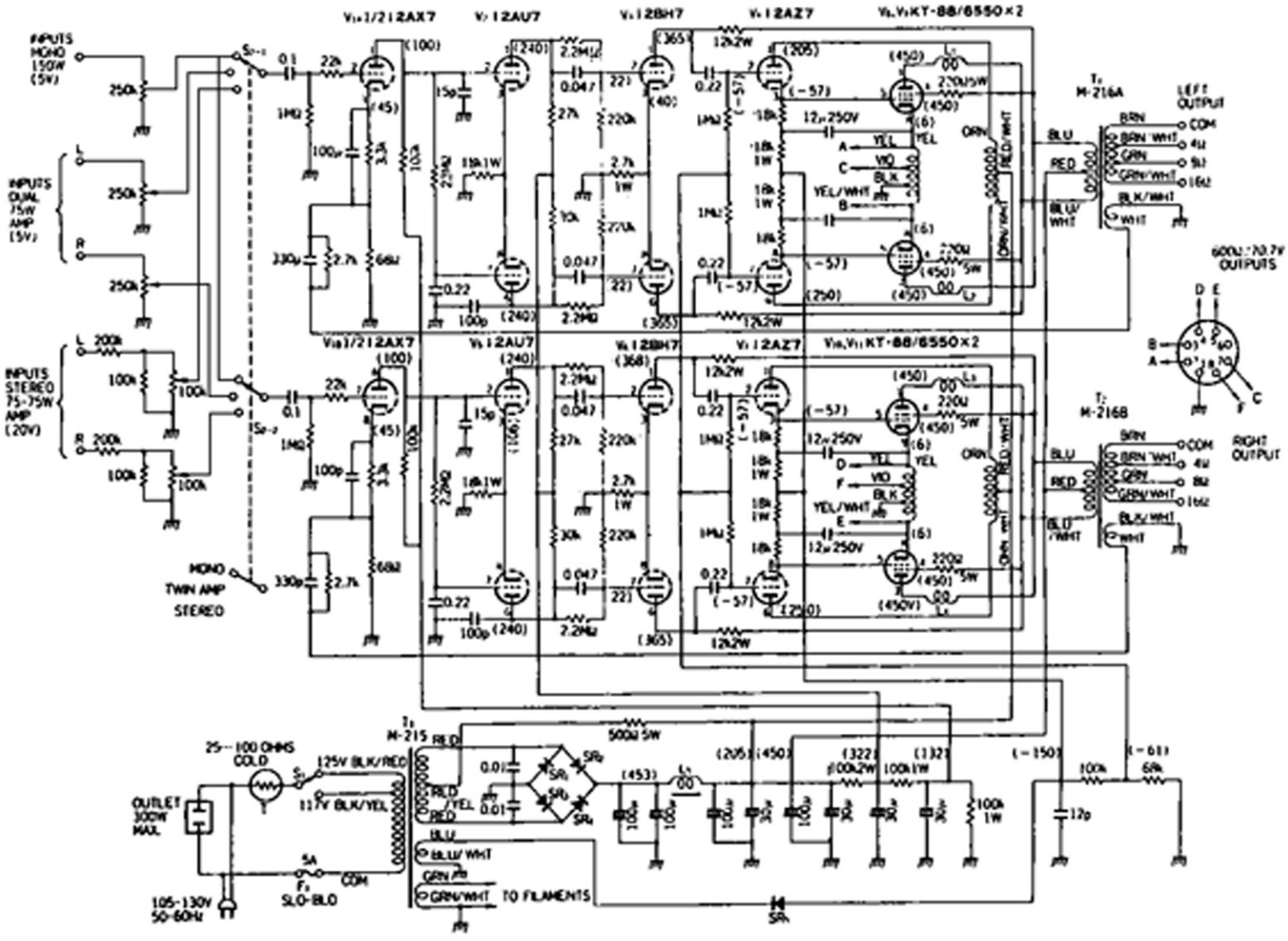McIntosh MC275 (original)