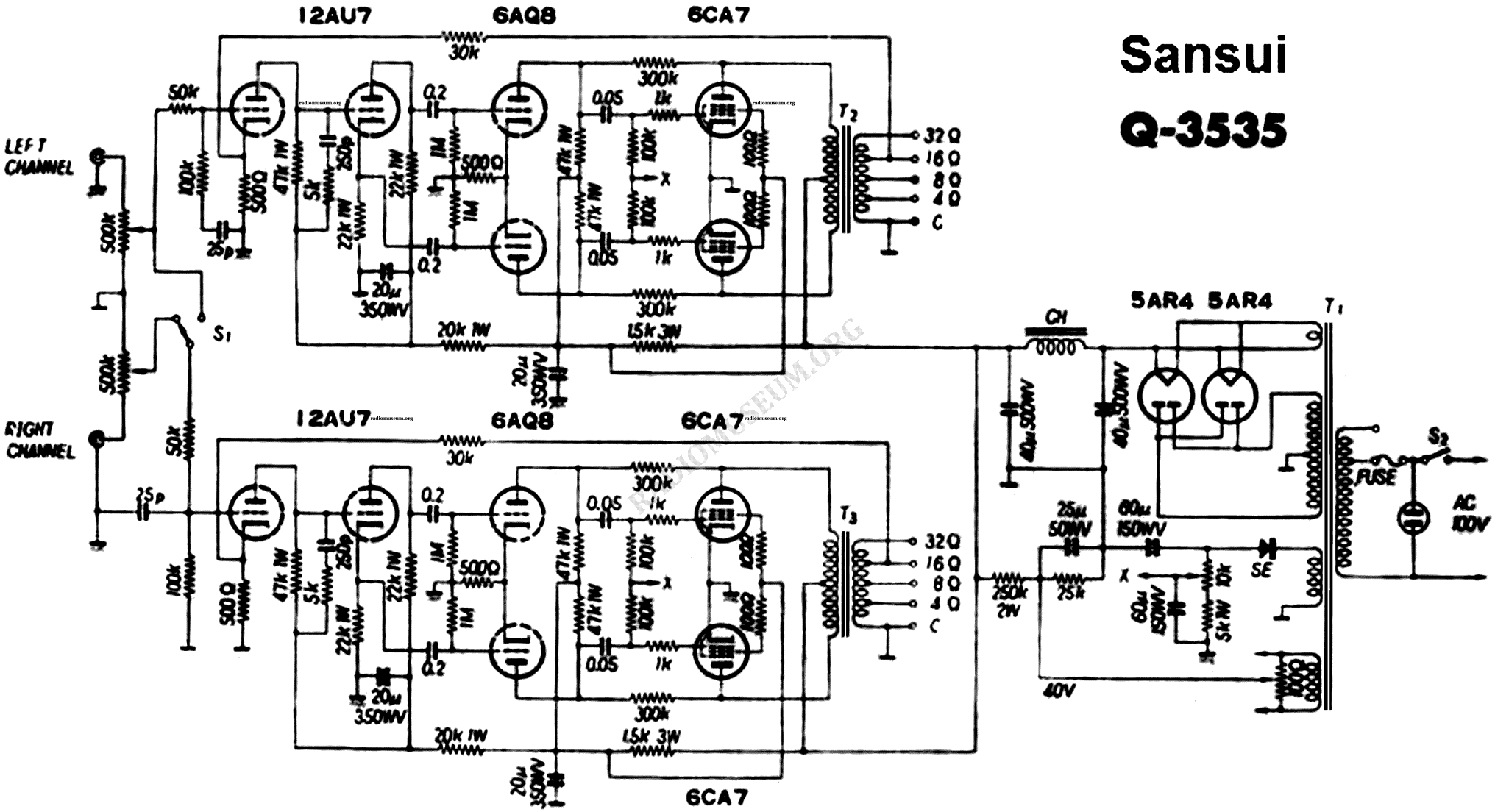
Sansui
Q-3535
12AU7
6AQ8
6CA7
LEFT CHANNEL
RIGHT CHANNEL
5AR4 5AR4
CH
FUSE
AC 100V
32Ω
16Ω
8Ω
4Ω
C
40V