KENWOOD

HI/FI STEREO COMPONENTS

SERVICE MANUAL

KA-8100
(KA-8150)

DC STEREO INTEGRATED AMPLIFIER

KA-8100

CONTENTS

EXTERNAL VIEW 3
INTERNAL VIEW 4
DISASSEMBLY FOR REPAIR 5
BLOCK AND LEVEL DIAGRAM 6
CIRCUIT DESCRIPTION 7
DESTINATIONS' PARTS LIST 11
PARTS LIST 12
ADJUSTMENT 14
PC BOARD 15
SCHEMATIC DIAGRAM 17
SPECIFICATIONS 18

Product for Audio Club has
black panel as illustration

Note:
The products are subject to modification in components and circuits in different countries and regions. This is because each product must be used under the best condition. This manual provides information of modification based on the standard in the U.S., for the convenience of ordering associated components and parts.

U.S.A.	K
Canada	P
PX	U
Australia	X
Europe	W
England	T
Scandinavia	L
South Africa	S
Other Area	M1
Audio Club	KA-8150

EXTERNAL VIEW

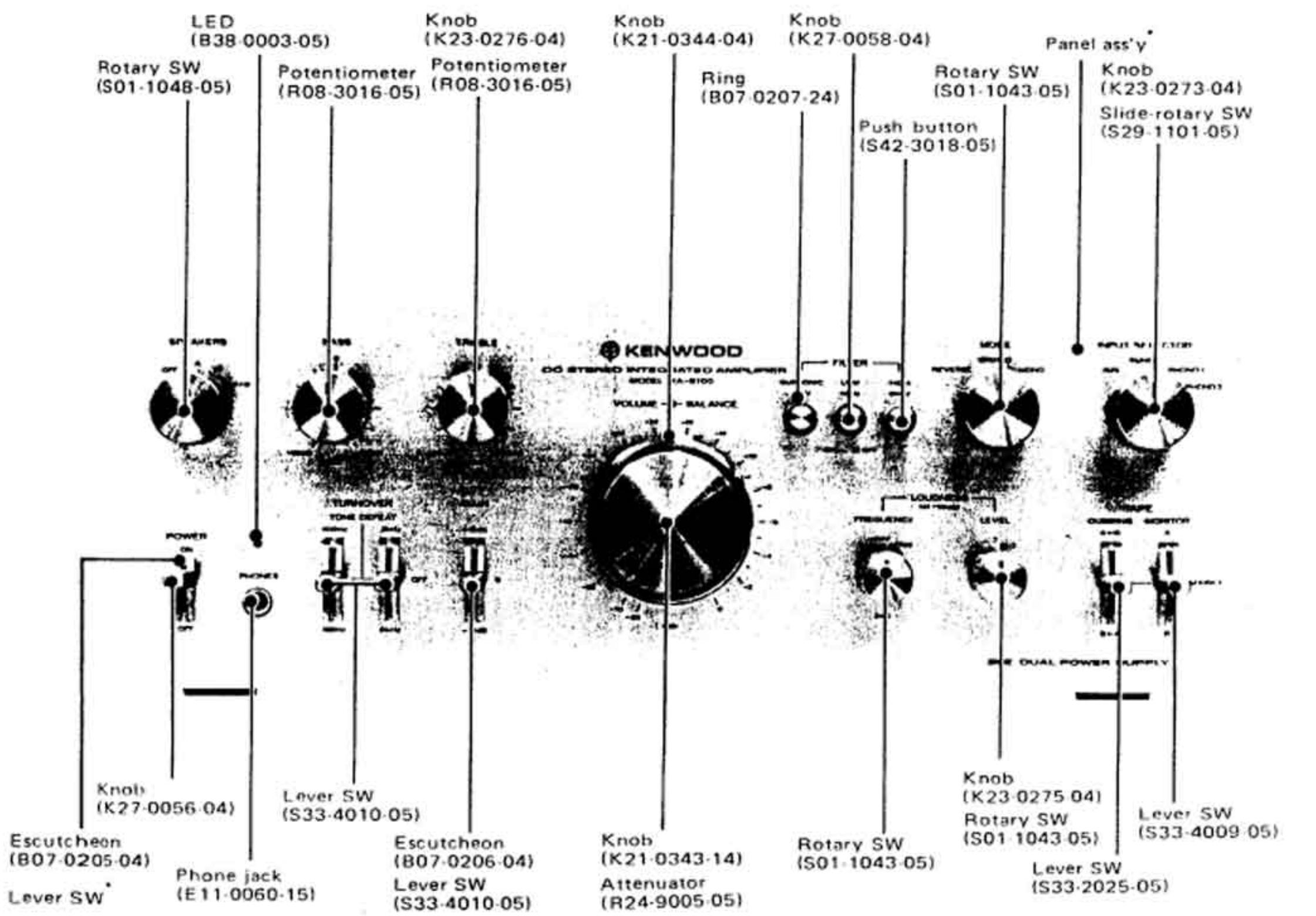

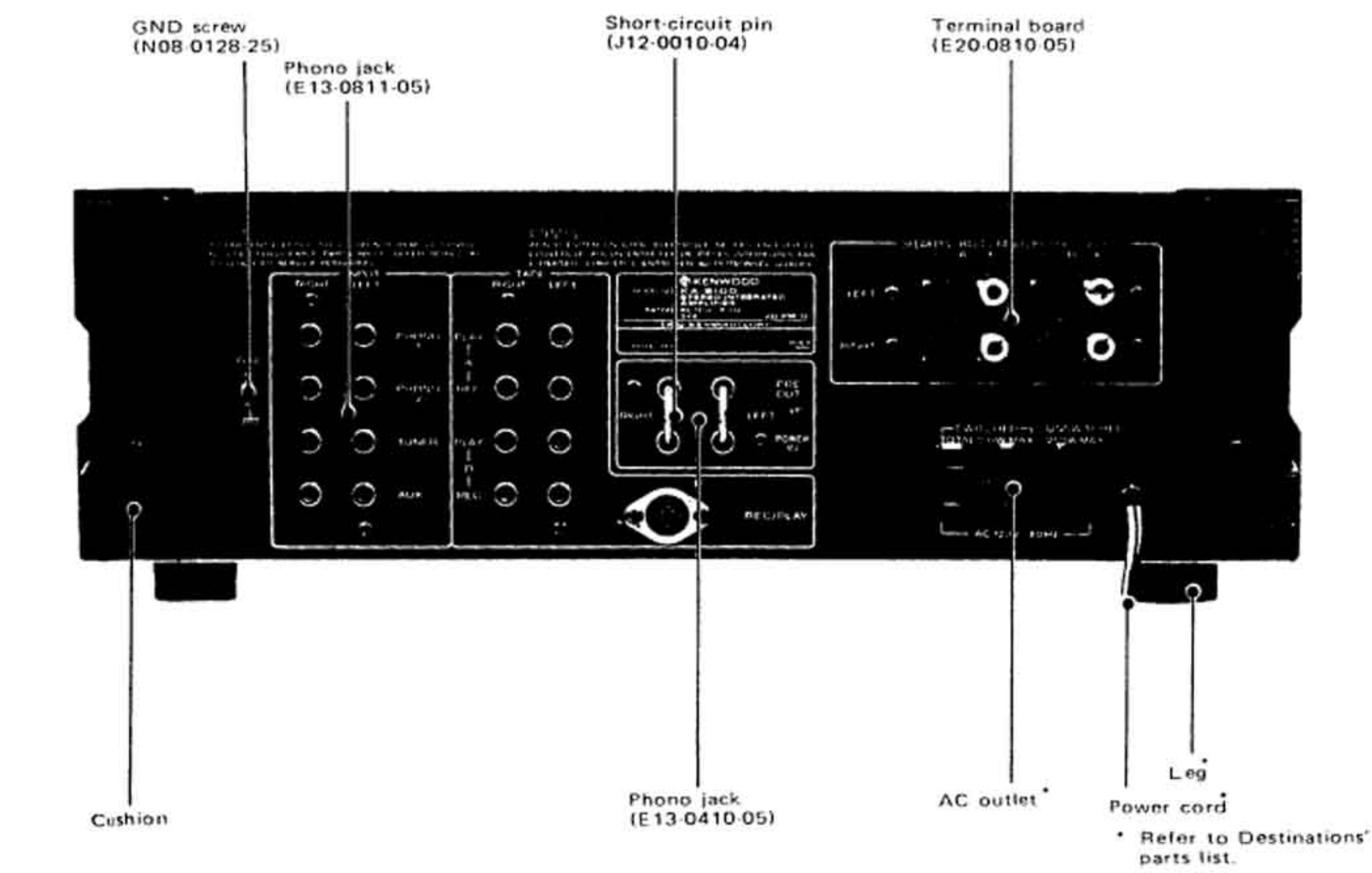

* Refer to Destinations' parts list.

INTERNAL VIEW

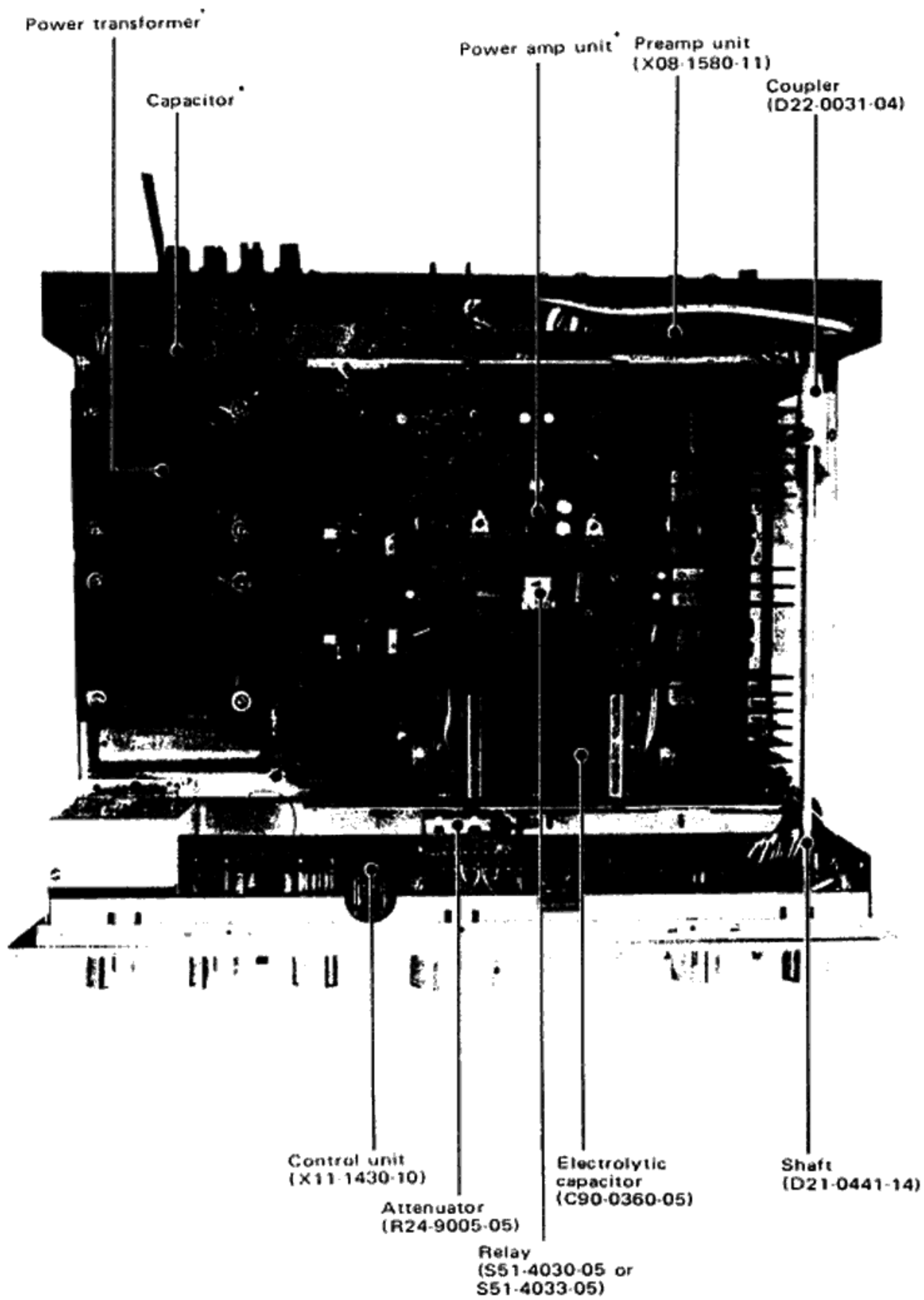

* Refer to Destinations' parts list

DISASSEMBLY FOR REPAIR

CONTROL UNIT

When checking the control unit, perform the following sequences.

1. Remove the case.
2. Loosen the screws fixing the sub-panel and remove one pair of screws on each side. Ⓐ
3. Incline the panel frontward.

When replacing a pc board detached from body, remove the panel ass'y from the sub-panel.

4. Pull out the knobs (For volume and balance, knobs used a hex. setscrew).
5. Remove 5 screws fixing the panel ass'y on the sub-panel. Ⓑ
6. Remove nuts of volume and switches.
7. Remove the screws fixing the lever switches.
8. Loosen the screws fixing the sub-panel and remove one pair of screws on each side.
9. Incline the panel frontward and remove the pc unit.

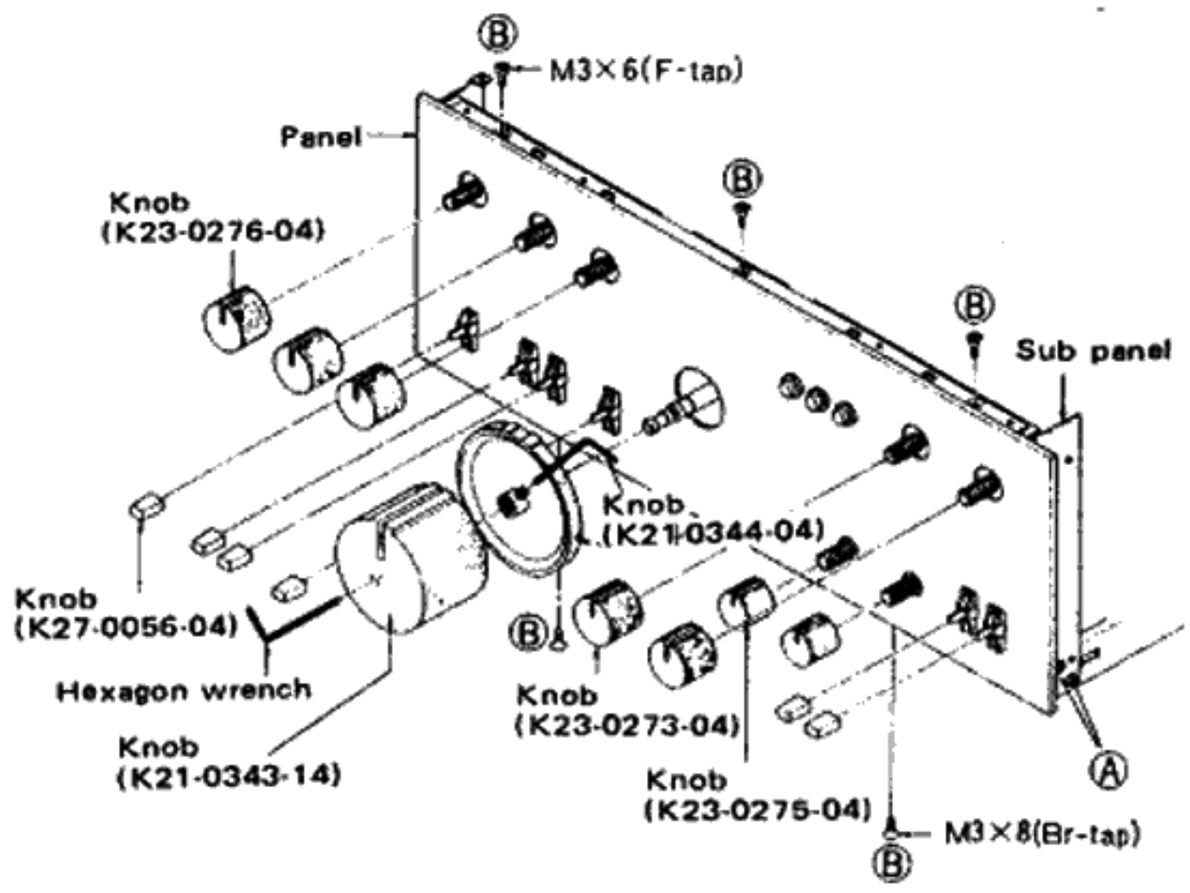

< Disassembly of Panel >

M3X6(F-tap): N32-3006-46
M3X8(Br-tap): N87-3008-46

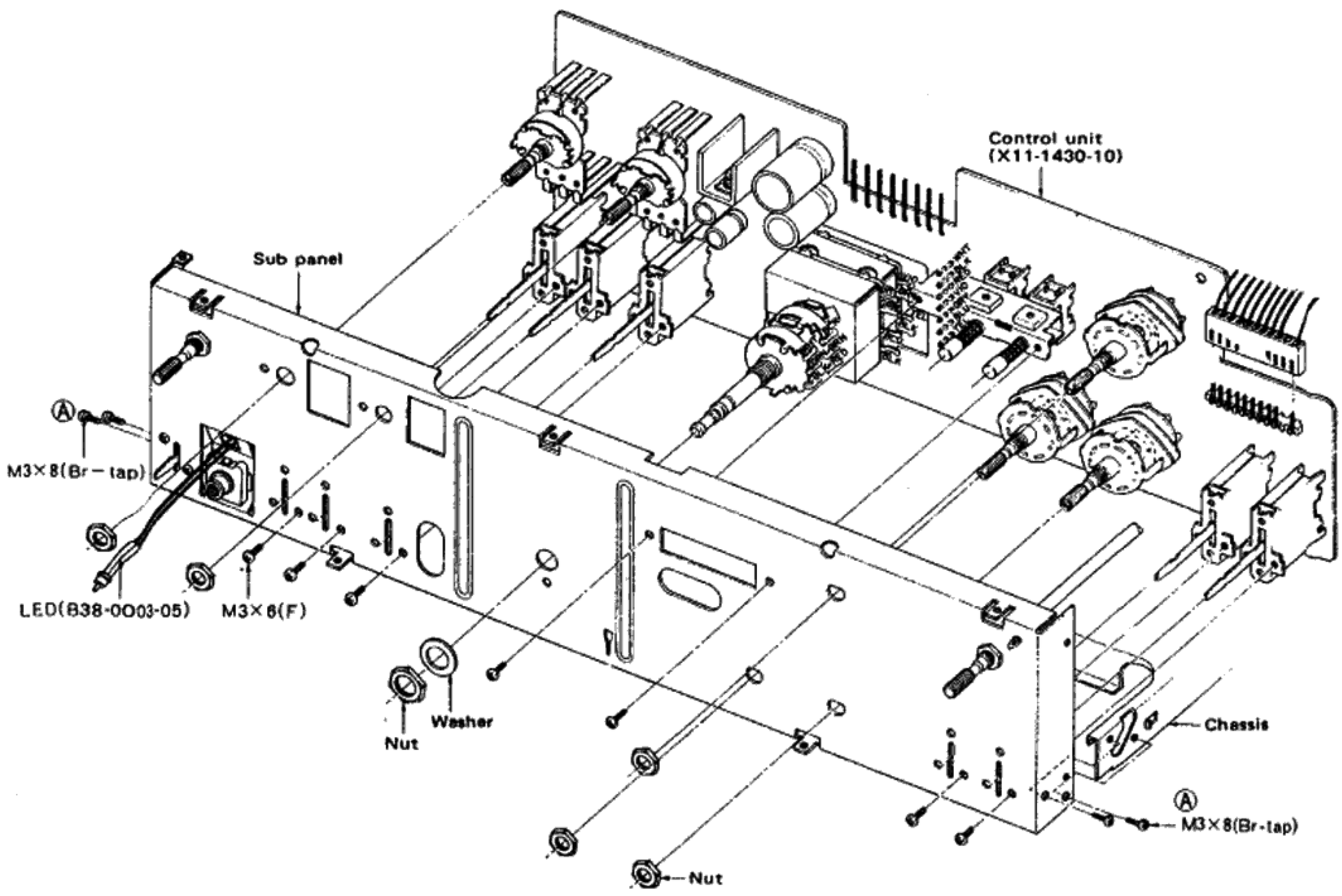

< Disassembly of The Control Unit >

DISASSEMBLY FOR REPAIR/BLOCK AND LEVEL DIAGRAM

PREAMP

The equalizer unit includes phono jack, when disassembling it, perform the following sequences.

1. Loosen screws of couplers and slide them to the panel side. Ⓒ
2. Remove 4 screws fixing the phono jack. Ⓓ
3. Loosen screws fixing the rear panel on the chassis and remove one pair of them on each side.
4. Incline the rear panel backward. Ⓔ
5. Take out the preamp unit.

Note:
The wrong position of the coupler happened not to turn the selector knob.

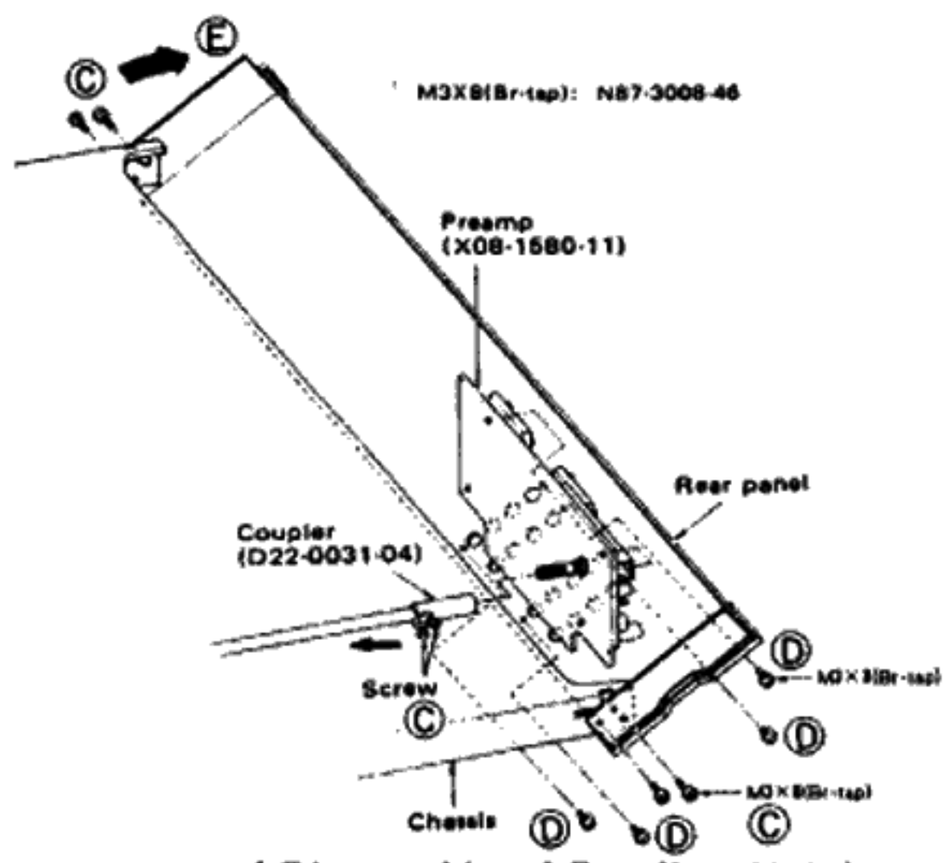

< Disassembly of Equalizer Unit >

POWER TRANSISTOR

The power amplifier unit includes the power supply and the protection circuit. The power amplifier unit can be checked and repair with the case and the bottom plate removed. If necessary to replace the left-channel power transistor, remove 6 screws on the framework. At this time, lifting the power amplifier block leftwards facilitates the work. (Refer to below figure.)

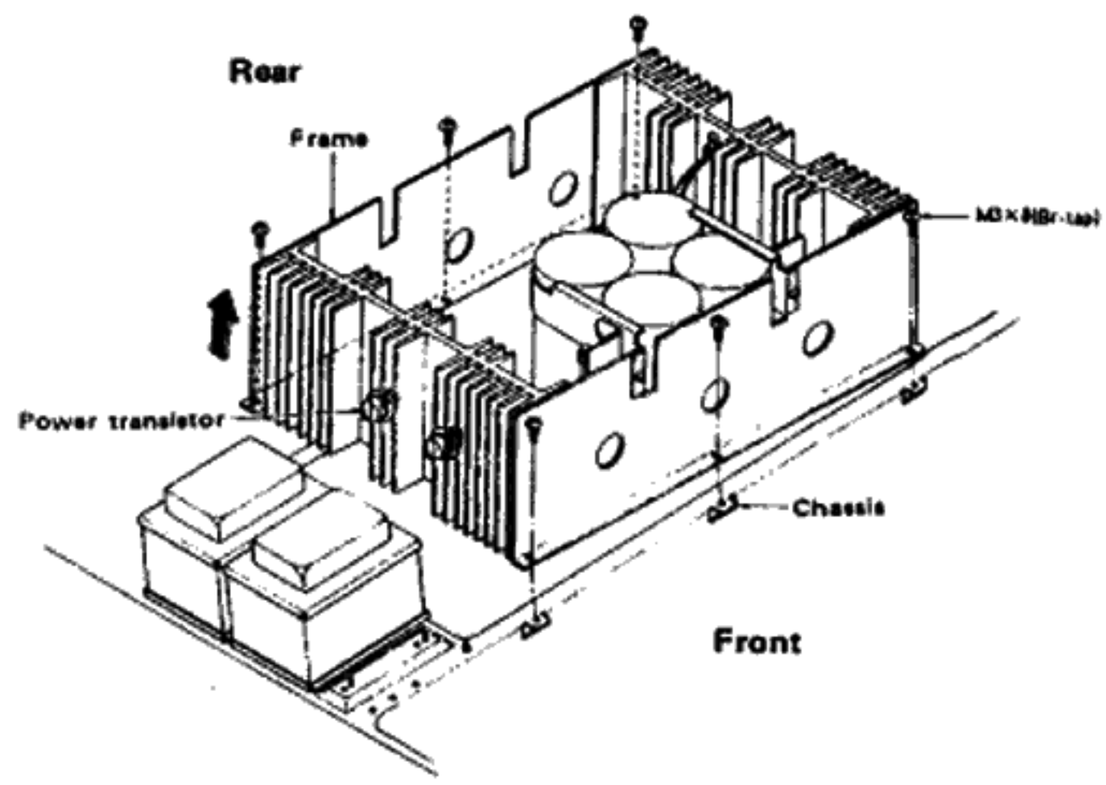

< Replacement of Power Transistor >

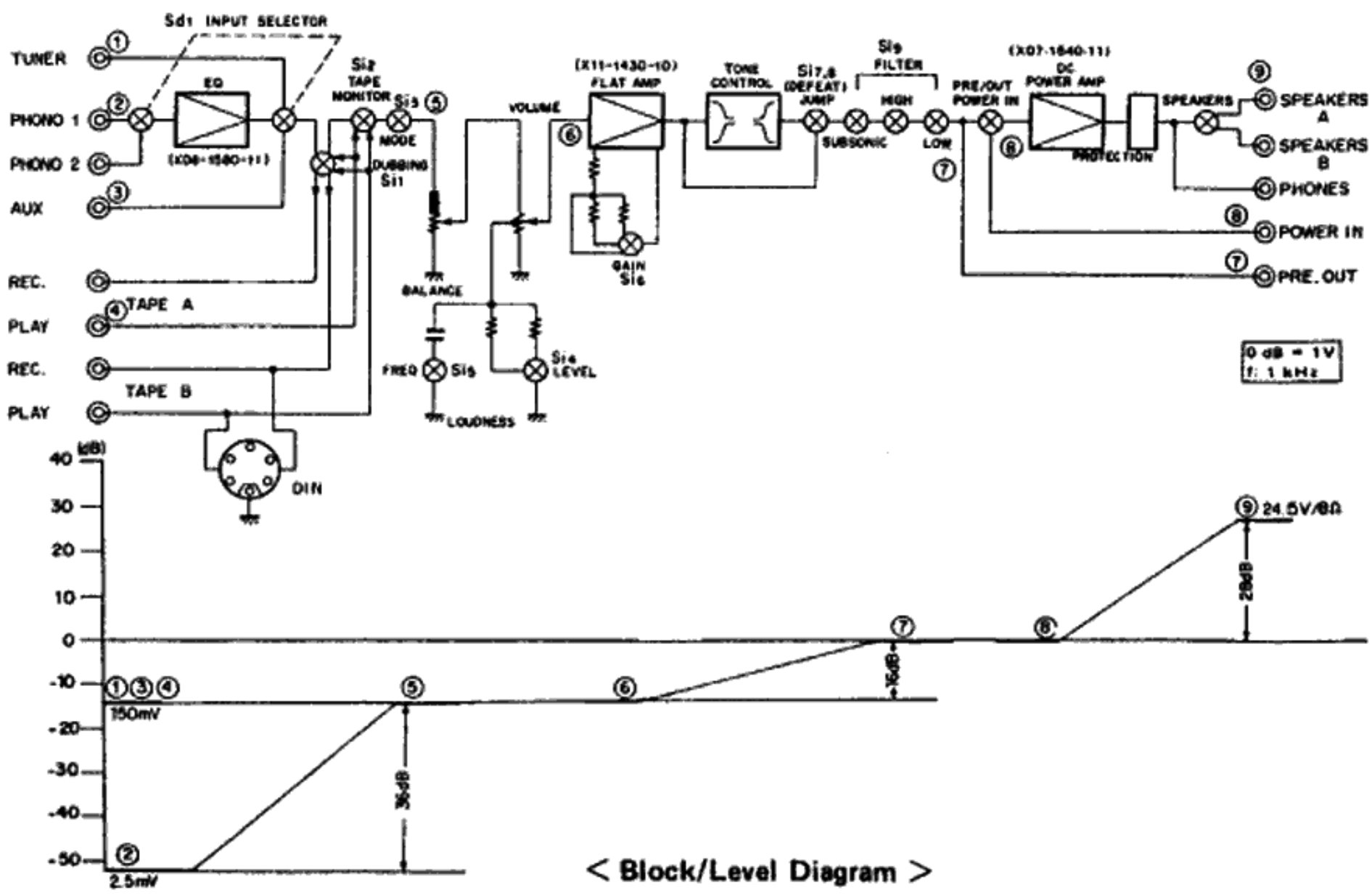

< Block/Level Diagram >

CIRCUIT DESCRIPTION

CIRCUIT CONFIGURATION

As shown in the block diagram, this circuit is composed of the 3 units. In the preamplifier the input stage consists of the ICL (Input capacitorless) differential amplifier and the current mirror circuit, while the next stage is composed of a class A in the Darlington connection, and SEPP output circuit. The input stage also employs a constant-current circuit for FET's source to improve the CMRR characteristic.

Like the preamplifier, the tone amplifier is in the ICL direct-coupled, 2-stage circuit configuration. The load in the second stage is led from the constant current circuit for the prevention of supply voltage fluctuations and the improvement of current availability.

In the power amplifier the input stage employs a single tip of dual FET to obtain a uniform thermal characteristic. The differential circuit consists of 3 stages. The power amplifier contains the ASO and bias circuits and also the DC protection circuit.

EQUALIZER AMPLIFIER

The equalizer circuit is composed of the FET differential amplifier and the class A and pure-complementary circuits. The load in the differential stage employs a "**current mirror**" circuit and its source is obtained from the **constant-current** circuit to increase the **CMRR**. The class A circuit in the second stage is in the **Darlington** connection which assures a high gain. This class A stage also employs a constant-current circuit for the stability of circuit performance. The output stage employs a pure complementary circuit to lower the output impedance. The equalizer circuit is designed to operate without being influenced by the load effect.

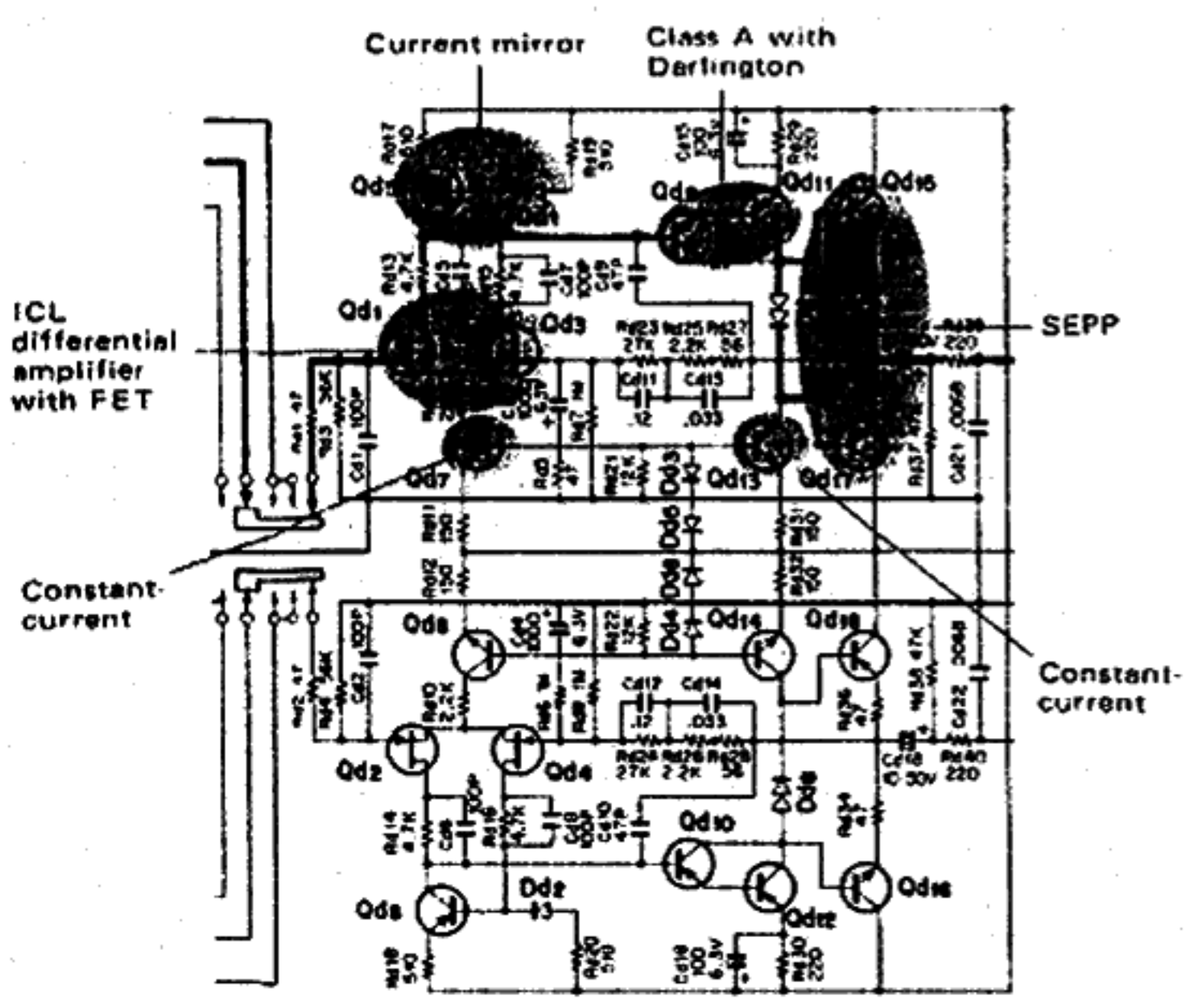

CURRENT MIRROR CIRCUIT

The current mirror circuit is composed of Qd5 and Dd1. It is a type of constant-current circuit which functions to increase the gain. If it is used in the input stage, the SN ratio in the input stage is increased and noise is reduced.

Operation

The operating currents of Qd1 and Qd3 are preset by the VGS. The drain current of Qd1 flows through Qd5 and that of Qd3 flows through Dd1. Qd5 is a constant-current circuit which is biased by Dd1 and Rd19. Therefore, the base potential of Qd5 is controlled by Dd1 and Rd19. Since both Rd17 and Rd19 in the current mirror circuit are the same elements, the operating currents of Qd1 and Qd3 are identical with each other, provided that the VBE-IC characteristic of Qd5 is identical with the VD-ID characteristic of Dd1. Thus the Qd3 current varies in the same manner as the Qd1 current does, just as it is cast on the mirror. The Qd1 and Qd3 elements are always under the balanced condition and the DC stability is assured.

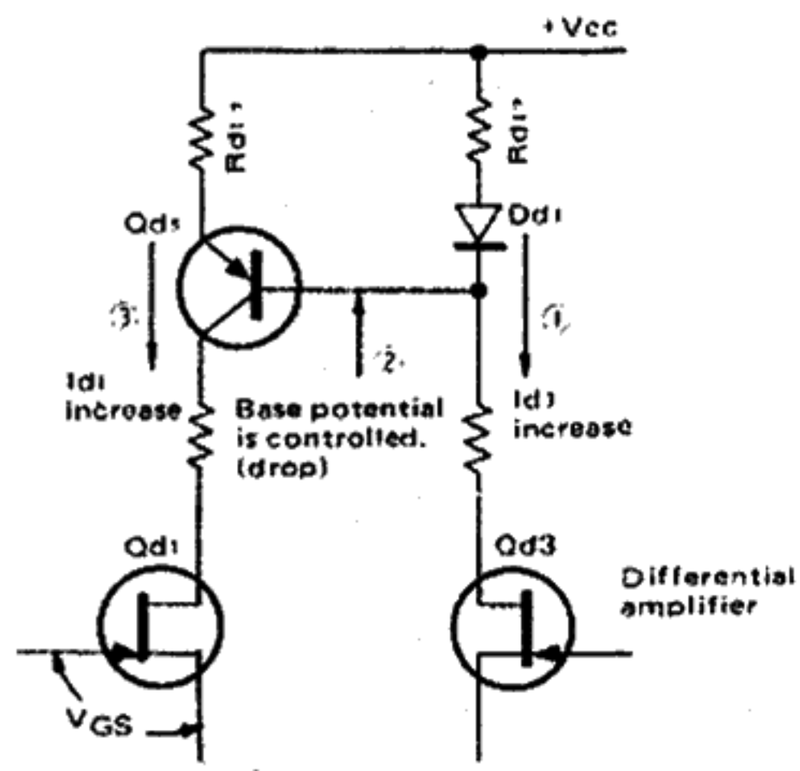

CONSTANT-CURRENT CIRCUIT

In the FET amplifier, the amplifier gain is expressed by the product or gm and RL. To obtain a higher gain, gm or RL may be increased. However, the FET generally possesses a considerably low gm and it is impossible to increase the gm value extremely. On the other hand a considerable amount of current must be supplied to increase the RL value. Thus a high source voltage must be applied to an FET which possesses insufficient gm. As a result there will be a problem of FET withstand voltage. For this reason, a constant-current circuit is employed.

This circuit is devised to maintain a constant emitter-base voltage (VBE) and a constant IB, thus maintaining a constant IC value as a result. As is recognized from the static characteristics of the transistor, the VBE—IB characteristic is expressed by a single curve (diode characteristic) at a constant temperature. If VBE is maintained constant, IB is also maintained constant.

CIRCUIT DESCRIPTION

The VCE−IC characteristics are based on the parameter IB. When IB is constant, the VCE−IC characteristics are expressed by a single curve. In a region where the VCE−IC characteristics are saturated, IC is almost constant regardless of variations in VCE. Namely the circuit assures the constant-current characteristics. When a constant-current circuit is used on the emitter side (source side) of the differential amplifier, the CMRR value will be improved. If it is used as an amplifier load, then it functions as a light load and the current can be always constant and sufficient. With these advantages, it can be regarded as a high-impedance circuit in terms of AC.

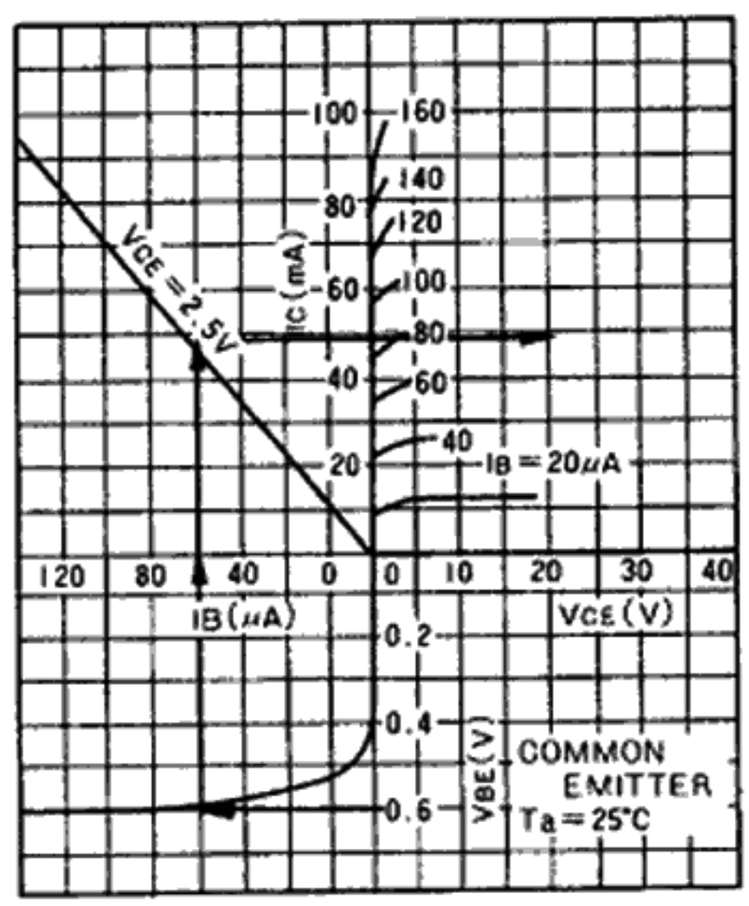

IC− VCE
(LOW VOLTAGE, LOW CURRENT REGION)

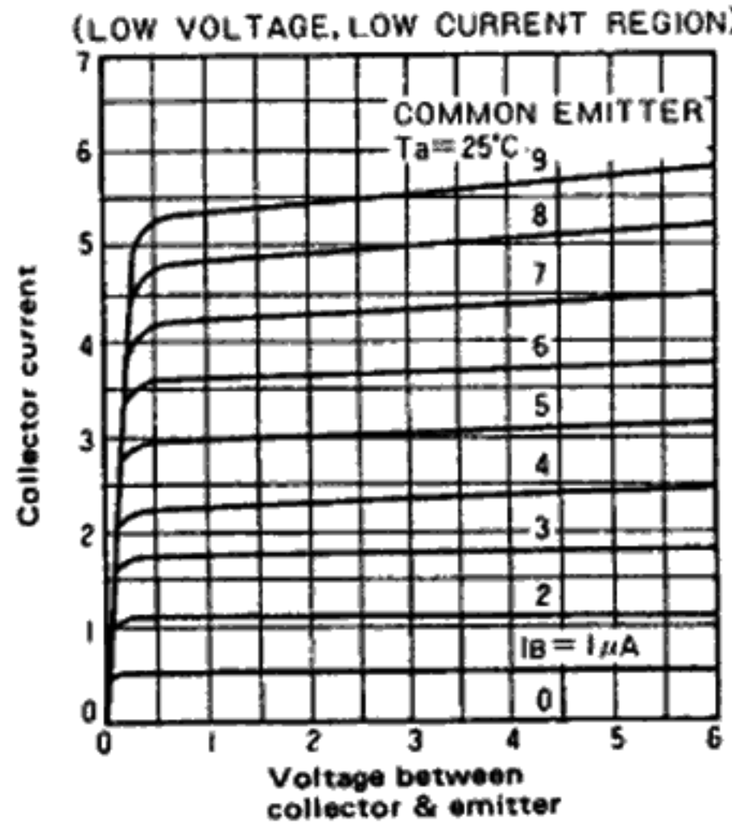

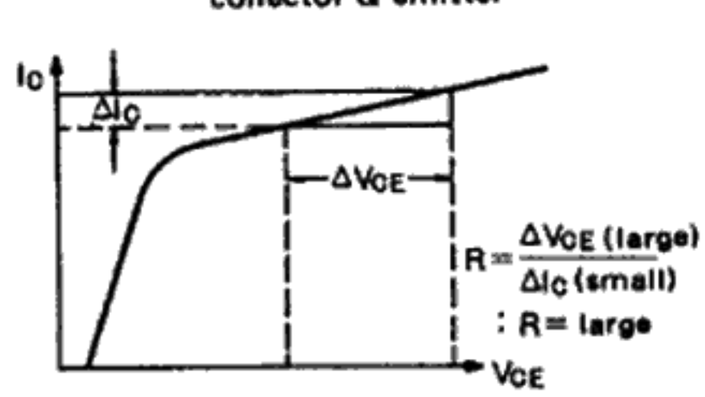

< IC-VCE Characteristics >

CMRR

The value CMRR (Common Mode Rejection Ratio) is an index which indicates the quality of differential amplifier. The differential amplifier provides a so-called differential-mode gain and a common-mode gain.

The former is the result of amplified differential component between input signals, while the latter is that of suppression of the common-mode input signal. If the ratio of the former value to the latter one is defined, it can be used as an index for expressing the quality of differential amplifier since it inevitably indicates the rate of the differential-mode signal that can be taken out without influenced by the common-mode signal.

The CMRR is defined as follows:

$$\text{Differential-mode gain (DMG)} = \left(\frac{V_{out1} - V_{out2}}{V_{in1} - V_{in2}}\right) \quad V_{in1} = -V_{in2}$$

$$\text{Common-mode gain (CMG)} = \left(\frac{V_{out1} + V_{out2}}{V_{in1} + V_{in2}}\right) \quad V_{in1} = V_{in2}$$

$$\text{CMRR} = \frac{\text{DMG}}{\text{CMG}}$$

The larger this value is, the more the differential signal only can be amplified.

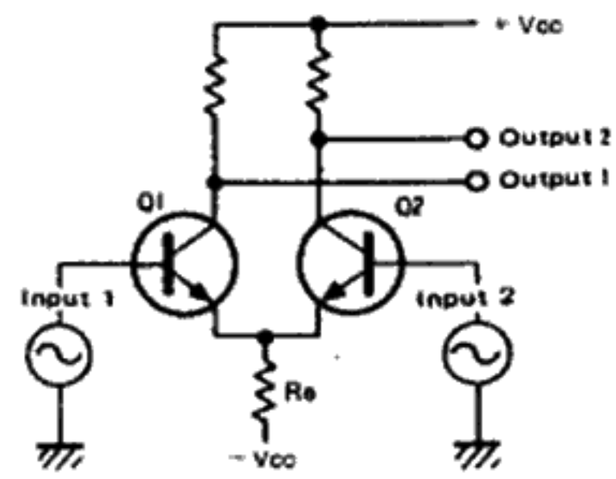

< Differential Amplifier >

DIFFERENTIAL AMPLIFIER

In differential amplifier, if Q1 and Q2 are completely identical with each other, the output being proportional to difference of input level is generated at the output terminal. When the same potential in the in-phase is applied to input 1 and input 2 respectively, no output is generated between output 1 and output 2. This is because the emitter resistor Re acts as a large negative feedback for both transistors. In other words, the output does not come outsince both inputs mutually function to cancel the collector currents. the collector currents.

When the inputs are mutually in the antiphase, the signal component does not flow through the emitter resistance and the negative feed back disappears. Thus the emitter resistance does not permit the flow of AC component. Since there is no feedback, the gain is increased by the amount of feedback reduction. In this manner, when Re increases, its self-bias characteristic is emphasized and the negative feedback is increased. This state is equivalent to the fact that the emitter resistance Re is zero in terms of AC component. If this resistance is increased, the common-mode component can be distinguished from the differential-mode component more effectively, thus obtaining a large CMRR value.

CIRCUIT DESCRIPTION

DARLINGTON CONNECTION

A class-A circuit in the preamp employs Darlington connection. The load of input stage used current mirror circuit, which is a kind of constant current circuit, and the constant current circuit has high impedance in AC circuit. The Darlington connection is obtained an increase of hfe and input impedance.

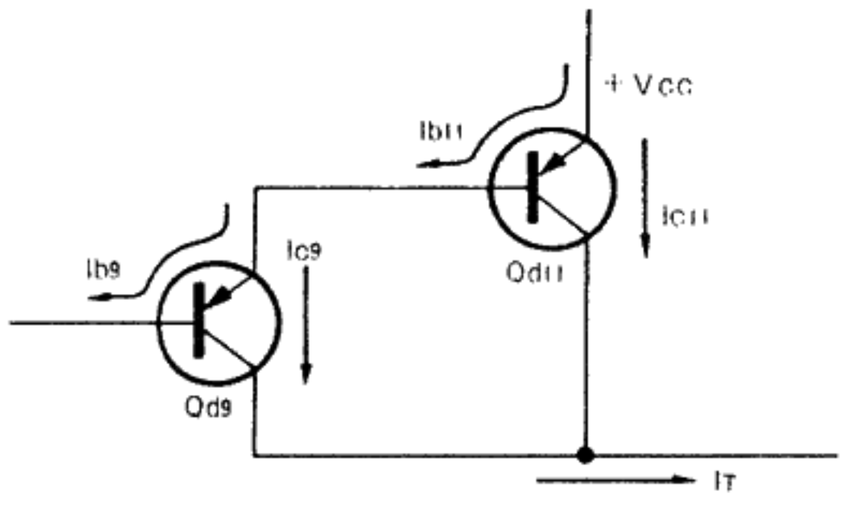

$Z_{in} = h_{fe9} \times h_{fe11} \times R_L$

$I_{c9} = I_{b9} \times h_{fe9}$

$I_{c11} = I_{b11} \times h_{fe11} = (I_{b9} + I_{c9}) \times h_{fe11}$

$I_T = I_{c9} + I_{c11} = I_{b9} \times h_{fe9} + (I_{b9} + I_{b9} \times h_{fe9}) h_{fe11}$

entire hfe

$h_{fe} = I_T / I_{b9}$

$h_{fe} = (h_{fe9} + 1)(h_{fe11} + 1) - 1$

$h_{fe} + 1 \fallingdotseq h_{fe}$

$h_{fe} = h_{fe9} \times h_{fe11}$

TONE AMP

The flat amp in tone circuit employs ICL circuit with FET like the preamp. The load of the second stage is constant-current circuit.

Gain control is obtained from varing the amount of feedback. Bass and treble tone amplifier are independence, but it is 0 dB.

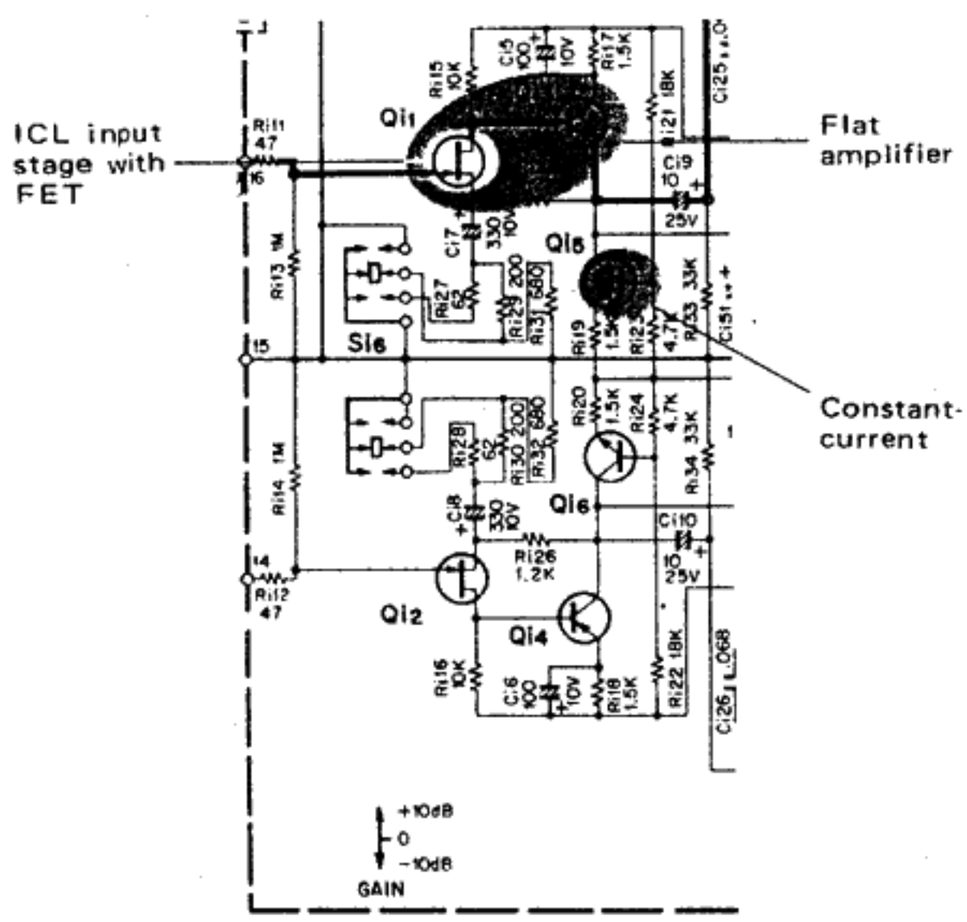

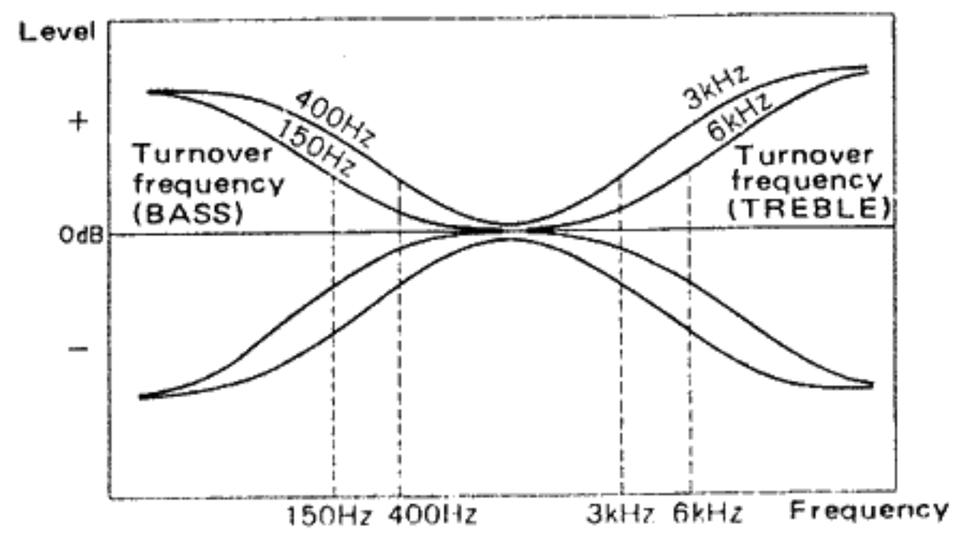

< Tone Control Response Curve >

POWER AMPLIFIER

The power amplifier is a DC power amplifier consisting of three differential amplifiers including a dual FET input, a complementary circuit and an input stage. Further this unit includes ASO and constant-current circuits. A one-chip dual **FET μPA63H** is used in the first stage to decrease DC leakage current caused by temperature drift to a very small extent. Furthermore, to improve **SVRR**, a Zener diode is used. For the differential amplifier, the protection and ICL circuitry, refer to KA-9100 Service Manual.

μPA 63H

The parameters such as ID and VGS are subjected to change with temperature. If these parameters used in the differential amplifier do not have thermally unified characteristics, the characteristic difference is directly amplified in the form of output difference. The newly developed μPA63H is a dual FET molded into a single chip. It's excellent in terms of characteristic dispersion.

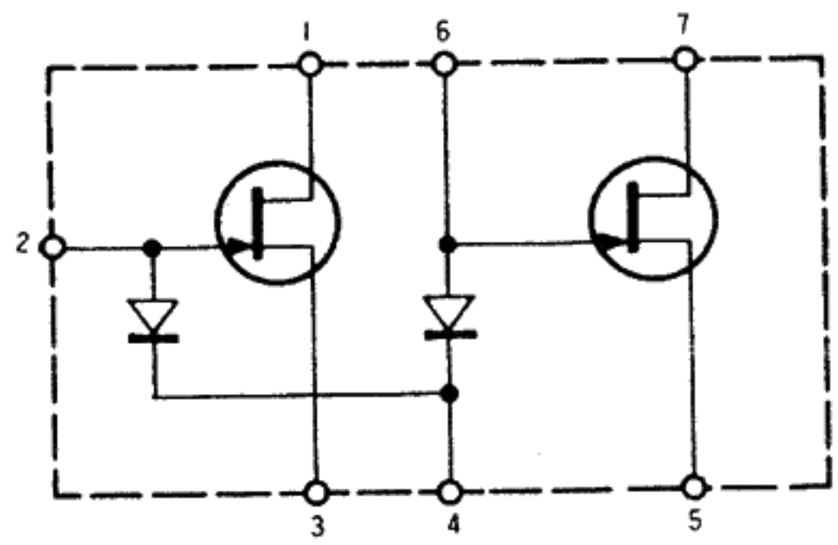

< Equivalent Circuit of μPA 63H >

CIRCUIT DESCRIPTION

SVRR (SUPPLY VOLTAGE REJECTION RATIO)

SVRR is the ratio of change of output voltage and change of supply voltage when the supply voltage varies. It is generally used to indicate the performance of IC.

$$\text{SVRR} = \frac{\text{Change of Output Voltage}}{\text{Change of Supply Voltage}}$$

If the supply voltage of equalizer is affected by the power amplifier, the dynamic crosstalk, S/N and the dynamic range will be changed for the worse. To resolve these problems, the dual power supply is used and SVRR is set to a high value.

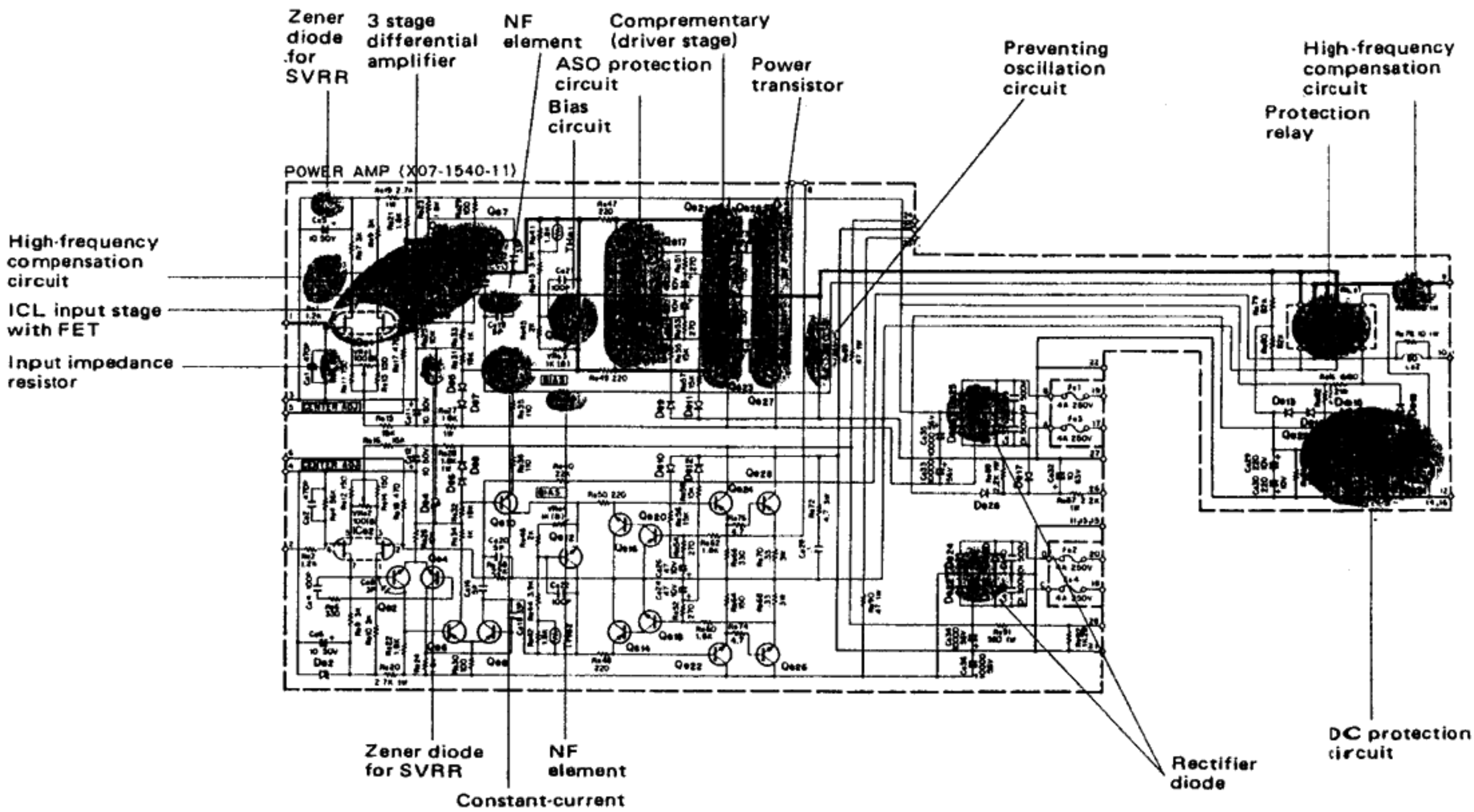

DC PROTECTION

The DC potential at the output terminal (speaker terminal) is always maintained at zero volt by the positive and negative power supply circuits and the differential amplifier. However, if a DC potential appears for a certain reason, the differential amplifier cannot reduce this potential to zero volt and DC current flows into the speaker load which is therefore destroyed. Hence, the DC protection circuit is installed. If a DC potential is generated and cannot be compensated by the differential amplifier, the DC protection circuit actuates a relay to separate the load (speaker) from the load circuit to protect it against destruction.

Assume that there is a DC potential at the output terminal and cannot be compensated by the differential amplifier. Then current begins to flow through Re79 or Re80 and Ce29 and Ce30 are charged. If they are positively charged, the base potential rises at Qe29 which is therefore turned on. When Qe29 is turned on, the collector potential of Qe29 is lowered and the bias voltage of Qe30 and Qe31 is also lowered. Thus Qe30 and Qe31 are turned off and the relay separates the load from the circuit. If Ce29 and Ce30 are negatively charged, the diodes De13 ~ 15 are biased in the forward direction to lower the base potential of Qe30. Thus Qe30 and Qe31 are turned off and the relay also functions to separate the load from the circuit.

This DC protection circuit is devised to prevent shock noise which may occur after power switch is on. When the power supply circuit is switched on, +Vcc current flows through Re82 and Ce31. The relay remains to separate the load until Ce31 is charged up, since the base potential at Qe30 is not raised. When Ce31 is completely charged, Qe30 is turned on and the relay is reset. No shock noise occurs since this time period (dependent on the time constant of Re82 and Ce31) is longer than the circuit stabilizing time after power switch is on.

Symbol ☆ : New parts

Ref. No.	U.S.A (K)	Canada (P)	PX (U)	Australia (X)	Europe (W)	Scandinavia (L)	England (T)	South Africa (S)	Other Area (M1)	Audio Club (KA-8150)	Description
–	A01-0319-03	A01-0319-03	A03-0226-01	A01-0319-03	A01-0319-03	A01-0319-03	A01-0319-03	A01-0319-03	A01-0319-03	A01-0319-03	Case ☆
–	A20-1154-02	A20-1154-02	A20-1154-02	A20-1154-02	A20-1154-02	A20-1154-02	A20-1152-02	A20-1154-02	A20-1154-02	A20-1172-02	Panel assembly ☆
–	–	–	A50-0050-04	–	–	–	–	–	–	–	Side board X 2 ☆
–	B46-0061-10	B46-0055-20	B46-0051-00 B46-0062-10	–	–	–	B46-0060-00	–	–	–	Warranty card
–	B50-1627-00	B50-1628-00	B50-1627-00	B50-1627-00	B50-1627-00	B50-1627-00	B50-1629-00	B50-1627-00	B50-1627-00	B50-1636-00	Instruction manual ☆
–	–	–	B59-0018-00	–	–	–	–	–	–	–	Kenwood service stations' list
C101,2	C91-0001-05	–	–	–	–	–	–	–	–	–	Ceramic capacitor X 2 0.01μF 125V
	–	–	C91-0023-05	C91-0023-05	–	–	–	C91-0023-05	C91-0023-05	C91-0023-05	Ceramic capacitor X 2 0.01μF 125V
	–	C91-0025-05	–	–	–	–	–	–	–	–	Film capacitor X 2 0.01μF 125V
C101 ~3	–	–	–	–	CK45E3D-103PMU	CK45E3D-103PMU	CK45E3D-103PMU	–	–	–	Ceramic capacitor X 3 0.01μF DC 2kV
–	–	–	D32-0077-04	D32-0077-04	D32-0077-04	–	–	D32-0077-04	D32-0077-04	D32-0077-04	Switch stopper
–	E08-0225-05	E08-0225-05	E08-0225-05	E08-0225-05	–	–	–	E08-0225-05	E08-0225-05	E08-0225-05	AC outlet X 3
–	E22-0421-05	E22-0421-05	E22-0421-05 X2	E22-0421-05 X 2	E22-0421-05 X2	E22-0421-05	E22-0421-05	E22-0421-05 X 2	E22-0421-05 X2	E22-0421-05	Lug
–	–	–	–	–	E22-0424-05	E22-0424-05	E22-0424-05	–	–	–	Lug
–	E30-0181-05	E30-0181-05	E30-0515-05	E30-0185-05	E30-0580-05	E30-0292-05	040-0306-05	040-0306-05	E30-0515-05	E30-0580-05	Power cord
–	H01-1717-04	H01-1718-04	H01-1715-04	H01-1717-04	H01-1717-04	H01-1717-04	H01-1719-04	H01-1717-04	H01-1717-04	H01-1720-04	Carton case ☆
–	–	H03-0567-04	–	–	–	–	–	–	–	–	Carton case (outside) ☆
–	–	–	H10-1492-02	–	–	–	–	–	–	–	Polystyrene foamed fixture X 2
–	H10-1493-02	H10-1493-02	–	H10-1493-02	H10-1493-02	H10-1493-02	H10-1493-02	H10-1493-02	H10-1493-02	H01-1493-02	Polystyrene foamed fixture☆
–	H10-1494-02	H10-1494-02	–	H10-1494-02	H10-1494-02	H10-1494-02	H10-1494-02	H10-1494-02	H10-1494-02	H10-1494-02	Polystyrene foamed fixture☆
–	H20-0444-04	H20-0444-04	H20-0394-04	H20-0444-04	H20-0444-04	H20-0444-04	H20-0444-04	H20-0444-04	H20-0416-04	H20-0444-04	Protection cover
–	J02-0088-05	J02-0089-05	J02-0049-14	J02-0089-05	J02-0089-05	J02-0089-05	J02-0089-05	J02-0089-05	J02-0089-05	J02-0089-05	Leg X 4
–	J41-0034-05	J41-0034-05	J41-0033-05	J41-0024-15	J41-0033-05	J41-0033-05	J41-0024-15	J41-0024-15	J41-0033-05	J41-0033-05	Cord bushing
–	–	–	–	J61-0038-05	–	J61-0038-05	–	J61-0038-05	–	–	Cord band
–	L01-1341-05	L01-1341-05	L01-1345-05	L01-1345-05	L01-1346-05	L01-1342-05	L01-1347-05	L01-1345-05	L01-1345-05	L01-1345-05	Power transformer X 2 ☆
S101	S33-2022-05	S33-2022-05	S33-2021-05	S33-2021-05	S33-2023-05	S33-2023-05	S33-2023-05	S33-2021-05	S33-2021-05	S33-2021-05	Power switch
–	–	–	S31-2001-05	S31-2001-05	S31-2001-05	–	–	S31-2001-05	S31-2001-05	S31-2001-05	Slide SW X 2 (Power voltage selector)
–	X07-1540-11	X07-1540-11	X07-1540-00	X07-1540-00	X07-1540-61	X07-1540-61	X07-1540-61	X07-1540-00	X07-1540-00	X07-1540-00	Power amp unit ☆

PARTS LIST

TOTAL

Symbol ☆ : New parts

Ref. No.	Parts No.	Description	Re-marks
		RESISTOR	
R101, 102	RS14AB3A221J	Metal 220Ω ±5% 1W	
		ATT	
VR1	R24-9005-05	Attenuator	☆
		SWITCH	
S1	S01-1048-05	Rotary (SPEAKERS)	☆
		MISCELLANEOUS	
–	B07-0205-04	Escutcheon (lever SW)	
–	B07-0206-04	Escutcheon X 5 (lever SW)	
–	B07-0207-24	Ring X 3 (push button)	
–	B38-0003-05	LED (GD-4-207RD)	
–	B42-0009-04	Passed sticker	
–	D21-0441-14	Shaft	
–	D22-0031-04	Coupler	
–	E06-0501-05	DIN socket	
–	E11-0060-15	Phone jack	
–	E13-0410-05	Phono jack 4P	
–	E20-0810-05	Terminal board 8P	
–	E29-0091-24	GND plate	☆
–	E31-0103-05	5 conductor cord (PRE OUT)	☆
–	H25-0078-00	Instruction bag	
–	J12-0010-04	Short circuit pin X 2	
–	J19-0306-05	Lead holder X 2	
–	J19-0506-05	PC supporter X 4 (GND plate)	
–	J19-0509-04	LED holder	
–	K21-0343-14	Knob (VOLUME)	☆
–	K21-0344-04	Knob (BALANCE)	☆
–	K23-0273-04	Knob X 2 (SELECTOR, MODE)	
–	K23-0275-04	Knob X 2 (LOUDNESS)	
–	K23-0276-04	Knob X 3 (TONE, SP)	☆
–	K27-0056-04	Knob X 6 (LEVER)	
–	K27-0058-04	Knob X 3 (PUSH BUTTON)	☆
–	N08-0125-05	Dress screw (M4 X 8) X 8	
–	N08-0128-25	GND screw	
–	X08-1580-11	Preamp unit	☆
–	X11-1430-10	Control amp unit	☆

POWER AMP UNIT (X07-1540-00, -11, -61)

Ref. No.	Parts No.	Description	Re-marks
		CAPACITOR	
Ce1, 2	CC45SL1H471R	Ceramic 470pF ±10%	
Ce3, 4	CC45SL1H101K	Ceramic 100pF ±10%	
Ce5, 6	CE04W1H100EL	Electrolytic 10μF 50WV	
Ce7, 8	CC45SL1H030D	Ceramic 3pF ±0.5pF	
Ce11, 12	CE04W1H100EL	Electrolytic 10μF 50WV	
Ce15, 16	CC45SL1H050D	Ceramic 5pF ±0.5pF	
Ce17, 18	CC45SL1H330K	Ceramic 33pF ±10%	
Ce19, 20	CC45SL1H050D	Ceramic 5pF ±0.5pF	
Ce21, 22	CC45SL1H101K	Ceramic 100pF ±10%	
Ce23~26	CE04W1A470EL	Electrolytic 47μF 10WV	
Ce27, 28	CQ93M1H104K	Mylar 0.1μF ±10%	
Ce29, 30	CE04W1A221EL	Electrolytic 220μF 10WV	
Ce31	CE04AW1C101MEL	Electrolytic 100μF 16WV	
Ce32	CE04W1J100EL	Electrolytic 10μF 63WV	
Ce33~36	C90-0360-05	Electrolytic 10,000μF 56WV	☆
Ce37~40	CK45E2H103P	Ceramic 0.01μF 500WV	
		RESISTOR	
Re17, 18	RD14GY2E471JMA	Carbon 470Ω ±5% 1/4W	
Re19, 20	RS14GB3A272JMA	Metal film 2.7kΩ ±5% 1W	
Re21~24	RD14GY2E182JMA	Carbon 1.8kΩ ±5% 1/4W	
Re27, 28	RS14GB3A182JMA	Metal film 1.8kΩ ±5% 1W	
Re29, 30	RD14GY2E101JMA	Carbon 100Ω ±5% 1/4W	
Re33, 34	RD14GY2E102JMA	Carbon 1kΩ ±5% 1/4W	
Re35, 36	RD14GY2E111JMA	Carbon 110Ω ±5% 1/4W	
Re37~40	RN92BC2E223F	Metal film 22kΩ ±1% 1/4W	
Re47~50	RD14GY2E221JMA	Carbon 220Ω ±5% 1/4W	
Re63, 64	RD14GY2E151JMA	Carbon 150Ω ±5% 1/4W	
Re65, 66	RD14GY2E331JMA	Carbon 330Ω ±5% 1/4W	
Re67~70	R92-0113-05	Metal film 0.33Ω ±10% 3W	
Re71, 72	RS14GB3F4R7JMA	Metal film 4.7Ω ±5% 3W	
Re73~76	RD14GY2E4R7JMA	Carbon 4.7Ω ±5% 1/4W	
Re77, 78	RS14GB3A100JMA	Metal film 10Ω ±5% 1W	
Re86	RS14GB3D681JMA	Metal film 680Ω ±5% 7W	
Re87, 89	RS14GB3A222JMA	Metal film 2.2kΩ ±5% 1W	
Re89, 90	RS14GB3A470JMA	Metal film 47Ω ±5% 1W	
Re91	RS14GB3A561JMA	Metal film 560Ω ±5% 1W	
Re92	RS14GB3D102JMA	Metal film 1kΩ ±5% 2W	
		SEMICONDUCTOR	
Qe1~4	V03-2089-00	Transistor 2SC2089	☆
Qe5~8	V01-0199-05	Transistor 2SA899(B)or(V)	
Qe9, 10	V03-0460-05	Transistor 2SC1904(B)or(V)	
Qe11, 12	V03-0504-05	Transistor 2SC828A	
Qe13, 14	V01-0073-05	Transistor 2SA673A	
Qe15~18	V03-0215-05	Transistor 2SC1213A	
Qe19, 20	V01-0073-05	Transistor 2SA673A	
Qe21, 22	V03-0468-05	Transistor 2SC1913(Q)or(R)	
Qe23, 24	V01-0188-05	Transistor 2SA913(Q)or(R)	
Qe25, 26	V03-0455-05	Transistor 2SC1116(D)or(Y)	
Qe27, 28	V01-0176-05	Transistor 2SA747 (D)or(Y)	
Qe29	V03-0408-05	Transistor 2SC1222(U)or(E)	
Qe30	V03-0461-05	Transistor 2SC1681(BL)	
Qe31	V03-0452-05	Transistor 2SC1735(D)or(E)	
ICe1, 2	V30-0232-05	IC μPA63H(L)or(M)	
De1, 2	V11-0435-05	Zener diode EQA01-14R	
De3, 4	V11-0433-05	Zener diode EQA01-10R	
De5~8	V11-0271-05	Diode 1S2076	
De9~15	V11-0273-05	Diode 1S2076A	
De16, 17	V11-0295-06	Diode W06B	
De18~25	V11-0465-05	Diode GP25D	
	V11-0238-05	or U05C(S)	
	V11-1300-10	or S3V20	
De26	V11-0273-05	Diode 1S2076A	
THe1, 2	V22-0027-05	Thermistor 5TP41L	
		POTENTIOMETER	
VRe1, 2	R12-0502-05	PC trimmer 100Ω(B) Metal graze Center voltage ADJ	
VRe3, 4	R12-1021-05	PC trimmer 1kΩ(B) bias	
		MISCELLANEOUS	
–	E02-0002-05	Transistor socket X 4	☆
Fe1~4	F05-4022-05	Fuse (4A) (X07-1540-00)	
	F05-4021-05	Fuse (4A) (X07-1540-11)	
	F05-4024-05	Fuse (4A) (X07-1540-61)	
–	F20-0066-05	Mica insulator X 4	
–	J13-0052-05	Fuse clip X 8	
Le1, 2	L39-0080-15	Phase compensating coil	
RLe1	S51-4030-05 or S51-4033-05	Relay	☆

PARTS LIST

PREAMP UNIT (X08-1580-11)

Ref. No.	Parts No.	Description	Re-marks
		CAPACITOR	
Cd1, 2	CC45SL1H101K	Ceramic 100pF ±10%	
Cd3, 4	C90-0361-05	Electrolytic 1000μF 6.3WV	☆
Cd5~8	CC45SL1H101K	Ceramic 100pF ±10%	
Cd9, 10	CC45SL1H470K	Ceramic 47pF ±10%	
Cd11, 12	CQ93M1H124G	Mylar 0.12μF ±2%	
Cd13, 14	CQ93M1H333G	Mylar 0.033μF ±2%	
Cd15, 16	CE04W0J101EL	Electrolytic 100μF 6.3WV	
Cd17, 18	CE04AW1H100MEL	Electrolytic 10μF 50WV	
Cd19, 20	CE04W1E221EL	Electrolytic 220μF 25WV	
Cd21, 22	CQ93M1H682K	Mylar 0.0068μF ±10%	
		RESISTOR	
Rd23, 24	RN92BC2E273F	Metal film 27kΩ ±1% 1/4W	
Rd25, 26	RN92BC2E222F	Metal film 2.2kΩ ±1% 1/4W	
Rd33~36	RD14GY2E470JMA	Carbon 47Ω ±5% 1/4W	
		SEMICONDUCTOR	
Qd1, 2	V09-0096-05	FET 2SK68A(M)	
Qd3, 4	V09-0094-06	FET 2SK68A(N)	
Qd5, 6	V01-0146-05	Transistor 2SA640	
Qd7, 8	V03-0405-05	Transistor 2SC945(P) or (Q)	
Qd9, 10	V01-0190-05	Transistor 2SA841	
Qd11, 12	V01-0084-05	Transistor 2SA733(P) or (Q)	
Qd13, 14	V03-0405-05	Transistor 2SC945(P) or (Q)	
Qd15, 16	V03-0270-05	Transistor 2SC945(Q)	
Qd17, 18	V01-0084-05	Transistor 2SA733(Q)	
		or	
Qd15, 16	V03-0405-05	Transistor 2SC945(P)	
Qd17, 18	V01-0733-10	Transistor 2SA733(P)	
Dd1, 2	V11-0271-05	Diode 1S2076	
Dd3~6	V11-0319-05	Diode M8513A(O)	
Dd7, 8	V11-2100-10	Varistor SV-22	
		MISCELLANEOUS	
Sd1	S29-1101-05	Slide rotary switch (selector)	☆
–	E13-0811-05	Phono jack (8P) X 2	☆
–	E31-0098-05	Lead wire with terminal	☆

CONTROL AMP UNIT (X11-1430-10)

Ref. No.	Parts No.	Description	Re-marks
		CAPACITOR	
Ci1, 2	CQ93M1H823K	Mylar 0.082μF ±10%	
Ci3, 4	CQ93M1H333K	Mylar 0.033μF ±10%	
Ci5, 6	CE04W1A101EL	Electrolytic 100μF 10WV	
Ci7, 8	CE04W1A331EL	Electrolytic 330μF 10WV	
Ci9~12	CE04AW1E100MEL	Electrolytic 10μF 25WV	
Ci13, 14	CE04AW1H010MEL	Electrolytic 1μF 50WV	
Ci15, 16	CE04AW1E100MEL	Electrolytic 10μF 25WV	
Ci17, 18	CE04W1A101EL	Electrolytic 100μF 10WV	
Ci19, 20	CE04AW1H010MEL	Electrolytic 1μF 50WV	
Ci21, 22	CE04AW1E100MEL	Electrolytic 10μF 25WV	
Ci23, 24	CE04W1A101EL	Electrolytic 100μF 10WV	
Ci25, 26	CQ93M1H683K	Mylar 0.068μF ±10%	
Ci27, 28	CQ93M1H563K	Mylar 0.056μF ±10%	
Ci29, 30	CQ93M1H332K	Mylar 0.0033μF ±10%	
Ci31, 32	CQ93M1H182K	Mylar 0.0018μF ±10%	
Ci33, 34	C91-0033-05	Polyethylene 1μF 100WV	
Ci35, 36	CQ93M1H224K	Mylar 0.22μF ±10%	
Ci37, 38	CQ93M1H682K	Mylar 0.0068μF ±10%	
Ci39, 40	CQ93M1H332K	Mylar 0.0033μF ±10%	
Ci41~44	CQ93M1H473K	Mylar 0.047μF ±10%	
Ci45, 46	CE04AW1H010MEL	Electrolytic 1μF 50WV	
Ci47, 48	CE04AW1E100MEL	Electrolytic 10μF 25WV	
Ci49, 50	CQ93M1H102K	Mylar 0.001μF ±10%	
Ci51~53	CE04W1E101EL	Electrolytic 100μF 25WV	
Ci54	CE04W1E221EL	Electrolytic 220μF 25WV	
Ci55, 56	CE04W1V331EL	Electrolytic 330μF 35WV	
		RESISTOR	
Ri97, 98	RD14GY2E152JMA	Carbon 1.5kΩ ±5% 1/4W	
		SEMICONDUCTOR	
Qi1, 2	V09-0092-05	FET 2SK68A(L) or (M)	
Qi3, 4	V01-0146-05	Transistor 2SA640(E) or (F)	
Qi5, 6	V03-0270-05	Transistor 2SC945(Q) or (R)	
Qi7~12	V03-0408-05	Transistor 2SC1222(E) or (U)	
Qi13	V03-0344-05	Transistor 2SC1419(B) or (C)	
Qi14	V01-0116-05	Transistor 2SA755(B) or (C)	
Di1, 2	V11-7100-10	Zener diode EQA01-25R	
		POTENTIOMETER	
VRi1, 2	R08-3016-05	Potentiometer 20kΩ(B) dual	
		SWITCH	
Si1	S33-4009-05	Lever switch (dubbing)	
Si2	S33-2025-05	Lever switch (monitor)	
Si3~5	S01-1043-05	Rotary switch (mode, loudness) X3	
Si6~8	S33-4010-05	Lever switch (gain, tone) X 3	
Si9	S42-3018-05	Push switch(sub. high, low filter)	☆
		MISCELLANEOUS	
–	E40-1114-05	Pin ass'y (11P)	
–	F02-0034-04	Heat sink	☆
–	F20-0078-05	Mica plate	

ADJUSTMENT

CENTER VOLTAGE ADJUSTMENT

① REAR PANEL

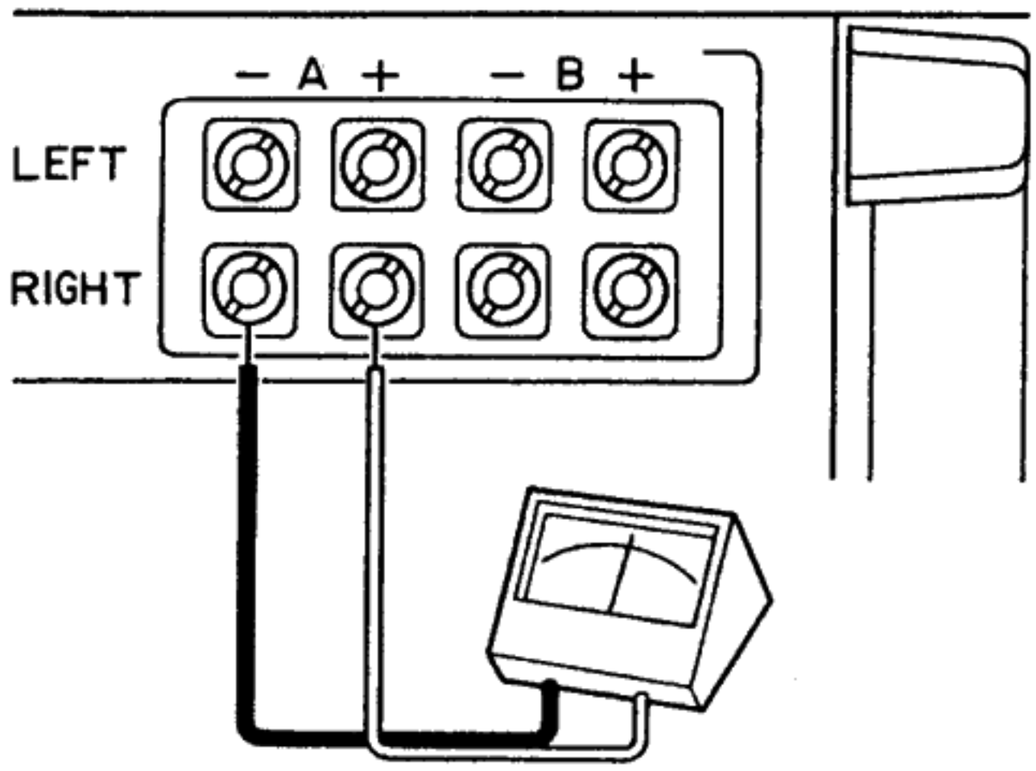

②

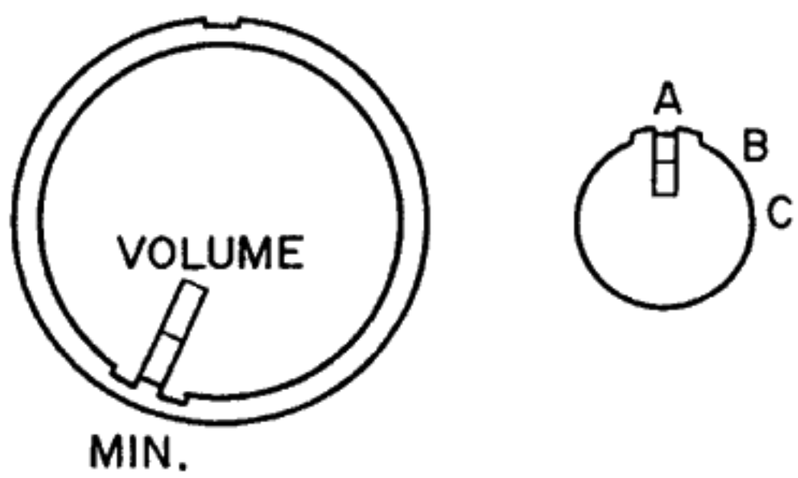

③

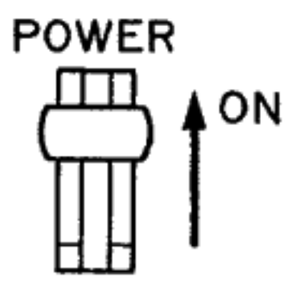

④

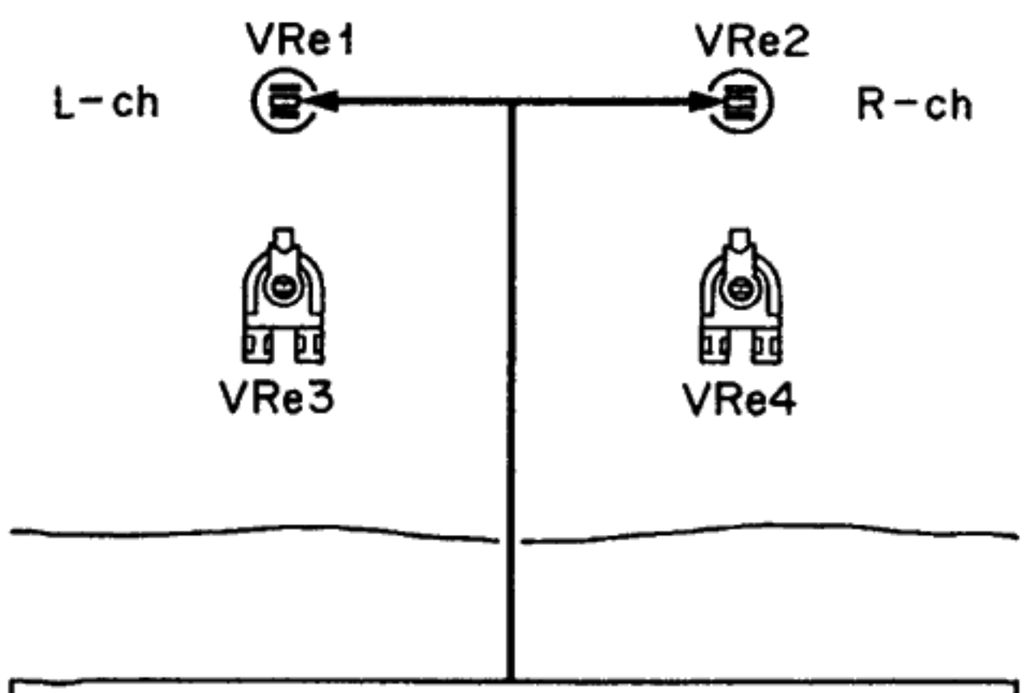

Turn the pc trimmer potentiometer VRe1 or 2 until the meter indicates OV

BIAS CURRENT ADJUSTMENT

①

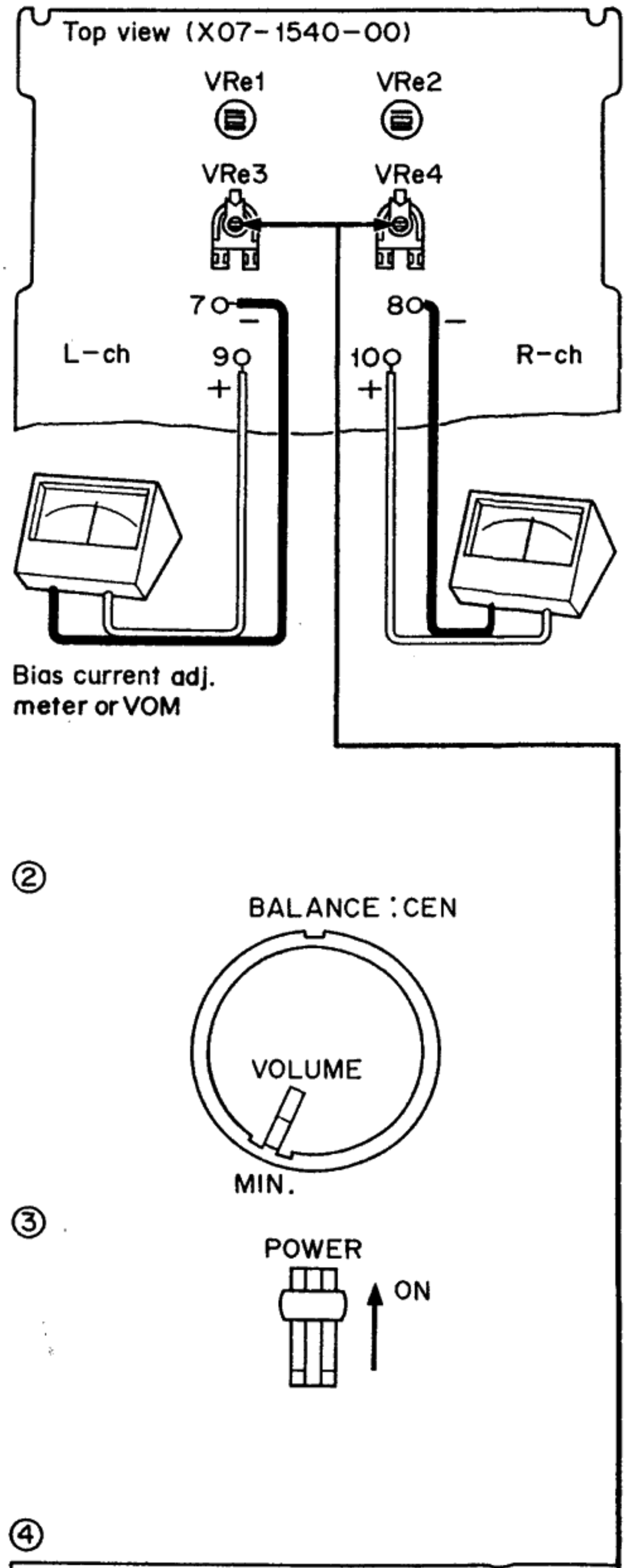

②

③

④

Turn the pc trimmer potentiometer VRe3 or 4 until the meter indicates 14mV

PC BOARD

▼ PREAMP (X08-1580-11)

Note:
Use the transistor with the same hfe in Qd15~18.
2SC945(Q) ←→ 2SA733(Q), 2SC945(P) ←→ 2SA733(P)

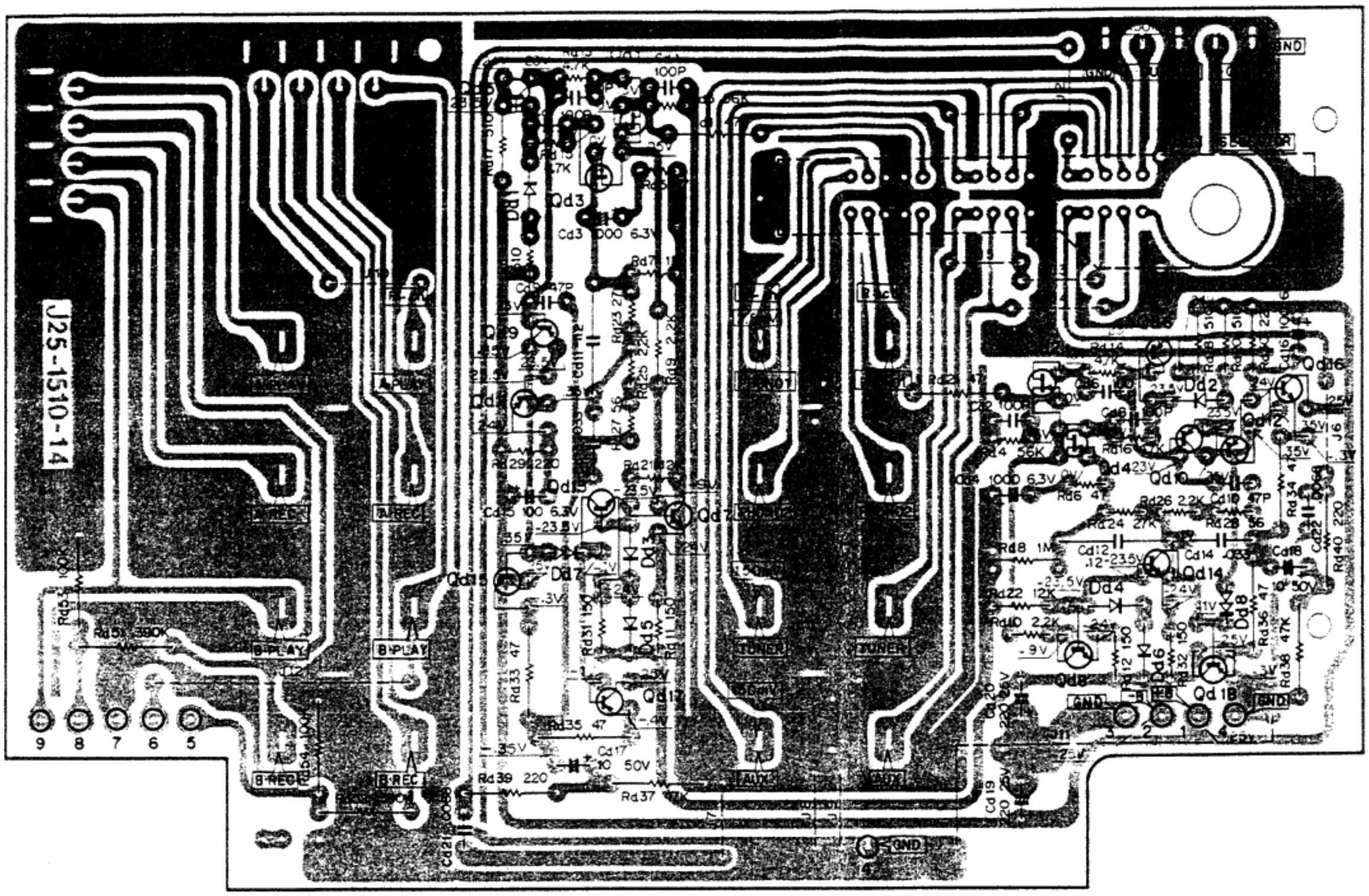

Qd1, 2:2SK68(M), Qd3, 4:2SK68(N), Qd5, 6:2SA640, Qd7, 8, 13, 14:2SC945(P) or (Q), Qd9, 10:2SA841, Qd11, 12:2SA733(P) or (Q), Qd15, 16:2SC945(Q), Qd17, 18:2SA733(Q), [Qd15, 16:2SC945(P), Qd17, 18:2SA733(P)], Dd1, 2:1S2076, Dd3~6:M8513A(O), Dd7, 8:SV-22

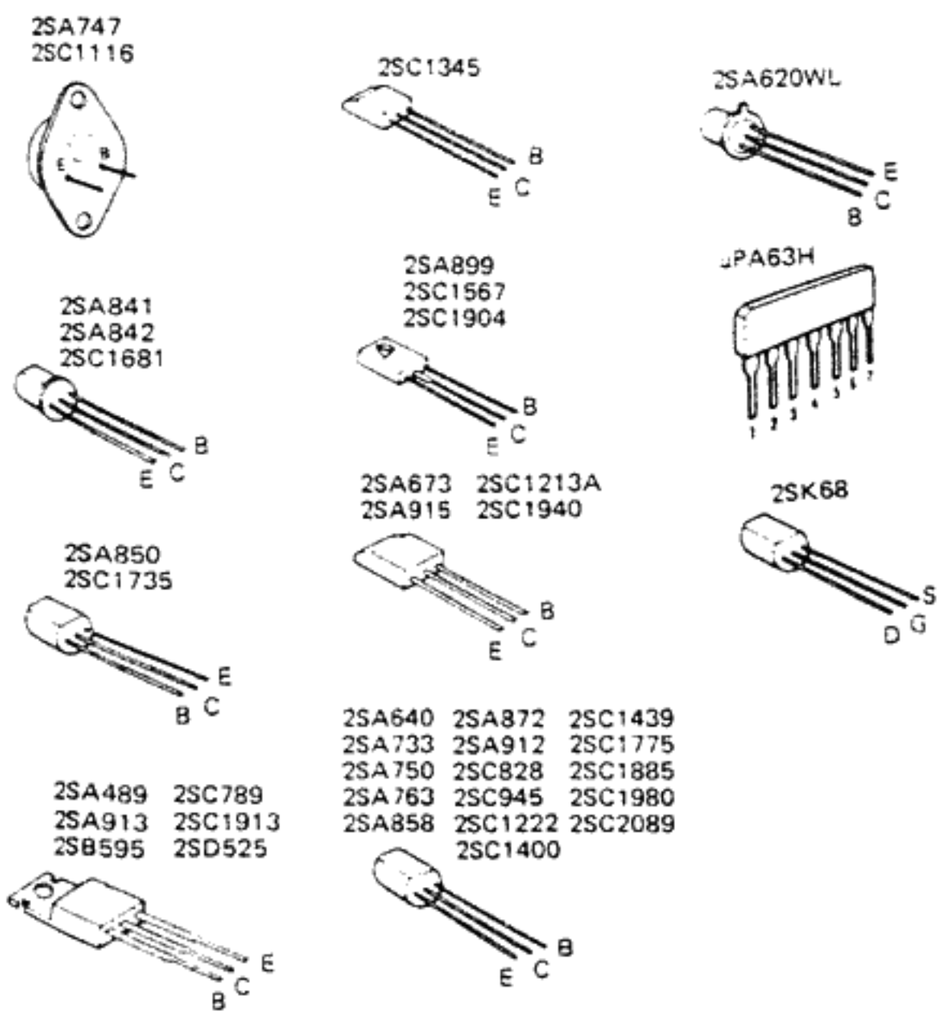

Semiconductor	Substitutions
(X07-1540-11)	
2SA673A	2SA850, 2SA858, 2SA912
2SA747	2SA747A
2SA899(B), (V)	2SA912, 2SA915
2SA913(Q), (R)	–
2SC828A	2SC945, 2SC1222, 2SC1345, 2SC1400, 2SC1681
2SC1116	2SC1116A
2SC1222(U), (E)	2SC1345, 2SC1400, 2SC1681
2SC1213A	2SC1439, 2SC1735
2SC1681(BL)	2SC1400, 2SC1775
2SC1735(D), (E)	2SC1567, 2SC1885, 2SC1940
2SC1904(B), (V)	2SC1885, 2SC1940
2SC1913(Q), (R)	–
2SC2089	2SC1775, 2SC1775A, 2SC1980
μPA63H	–
(X08-1580-11)	
2SA640	2SA750, 2SA763WL, 2SA841, 2SA842, 2SA872
2SA733(P), (Q)	2SA640, 2SA750, 2SA841 (Tr for small signal more than 50V V_{CE}
2SA841	2SA840, 2SA750, 2SA872
2SC945(P), (Q)	Tr for small signal more than 50V pressure-proof
2SK68A(M)	–
2SK68A(N)	–
(X11-1430-10)	
2SA640	2SA620WL, 2SA750, 2SA763WL, 2SA841, 2SA842, 2SA872
2SA755(B), (C)	2SA487, 2SB595 (Tr more than 50V V_{CE} more than 20W pc
2SC945(Q), (R)	Tr for small signal more than 50V V_{CE}
2SC1222(E), (U)	2SC1345, 2SC1400, 2SC1681, 2SC1775
2SC1419(B), (C)	2SC789, 2SD625 (Tr more than 50V V_{CE} more than 20W pc

▼ CONTROL (X11-1430-10)

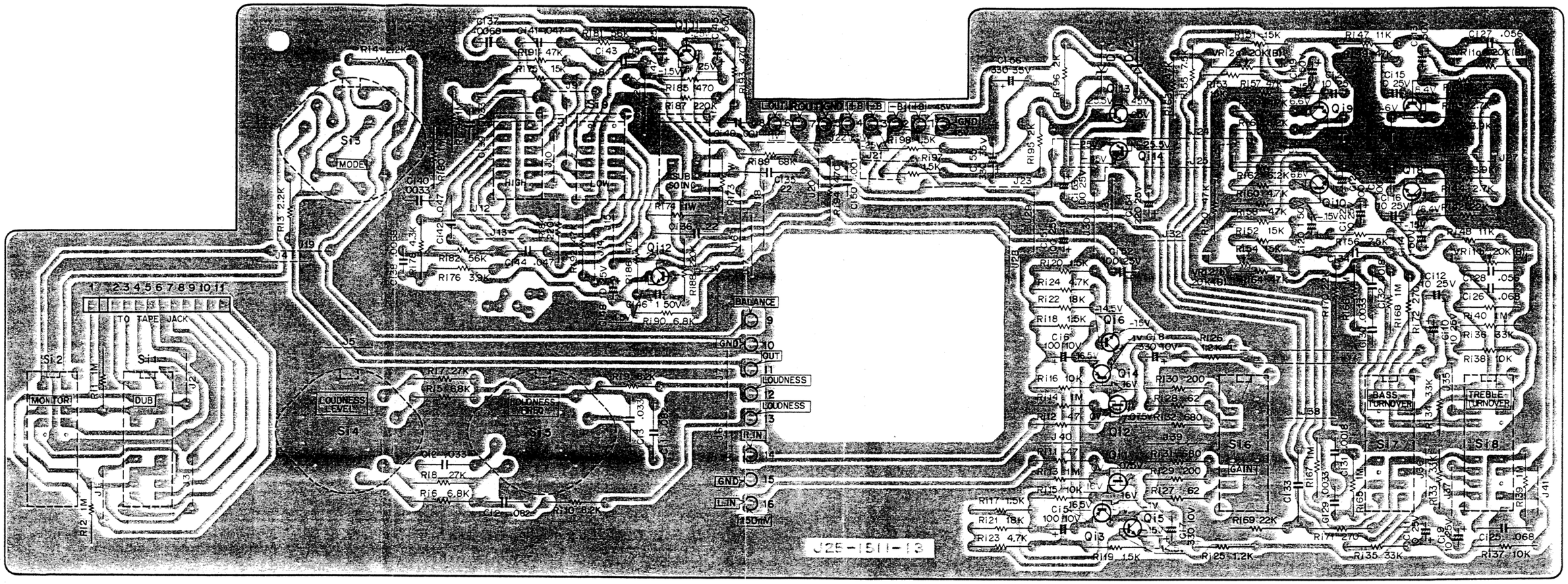

Qi1, 2:2SK68A(L) or (M), Qi3, 4:2SA640(E) or (F), Qi5, 6:2SC945(Q) or (R), Qi7~12:2SC1222(E) or (U), Qi13:2SC1419(B) or (C), Qi14:2SA755(B) or (C), Di1, 2:EQA01-25R

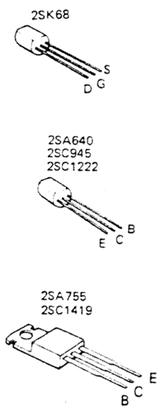

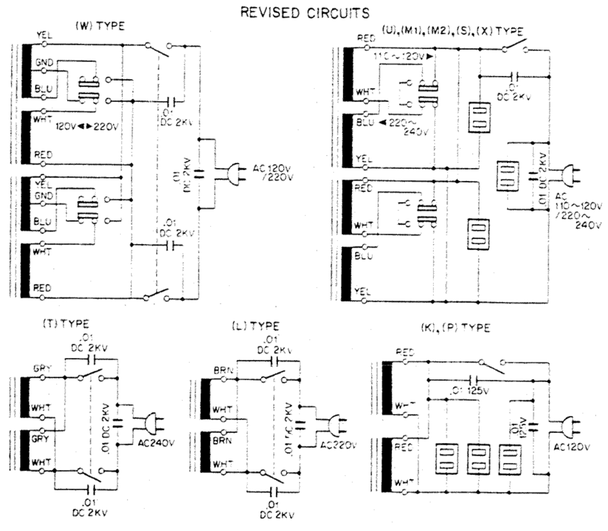

ABSOLUTE MAX. RATINGS

TRANSISTOR	V_{CBO}	V_{EBO}	V_{CEO}	I_C	P_C	T_j	T_{stg}	fT
2SC2089	120V	5V	120V	50mA	300mW	125°C	−55 ~ + 125°C	–

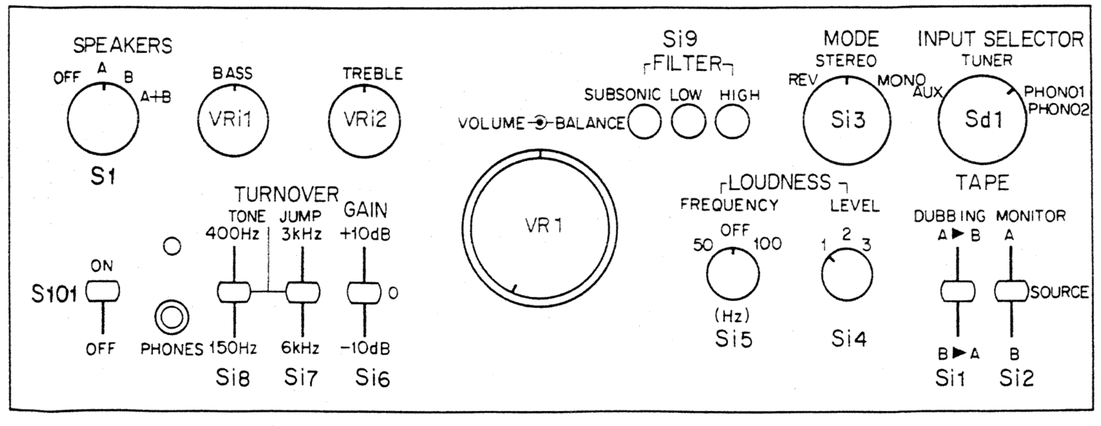

SCHEMATIC DIAGRAM

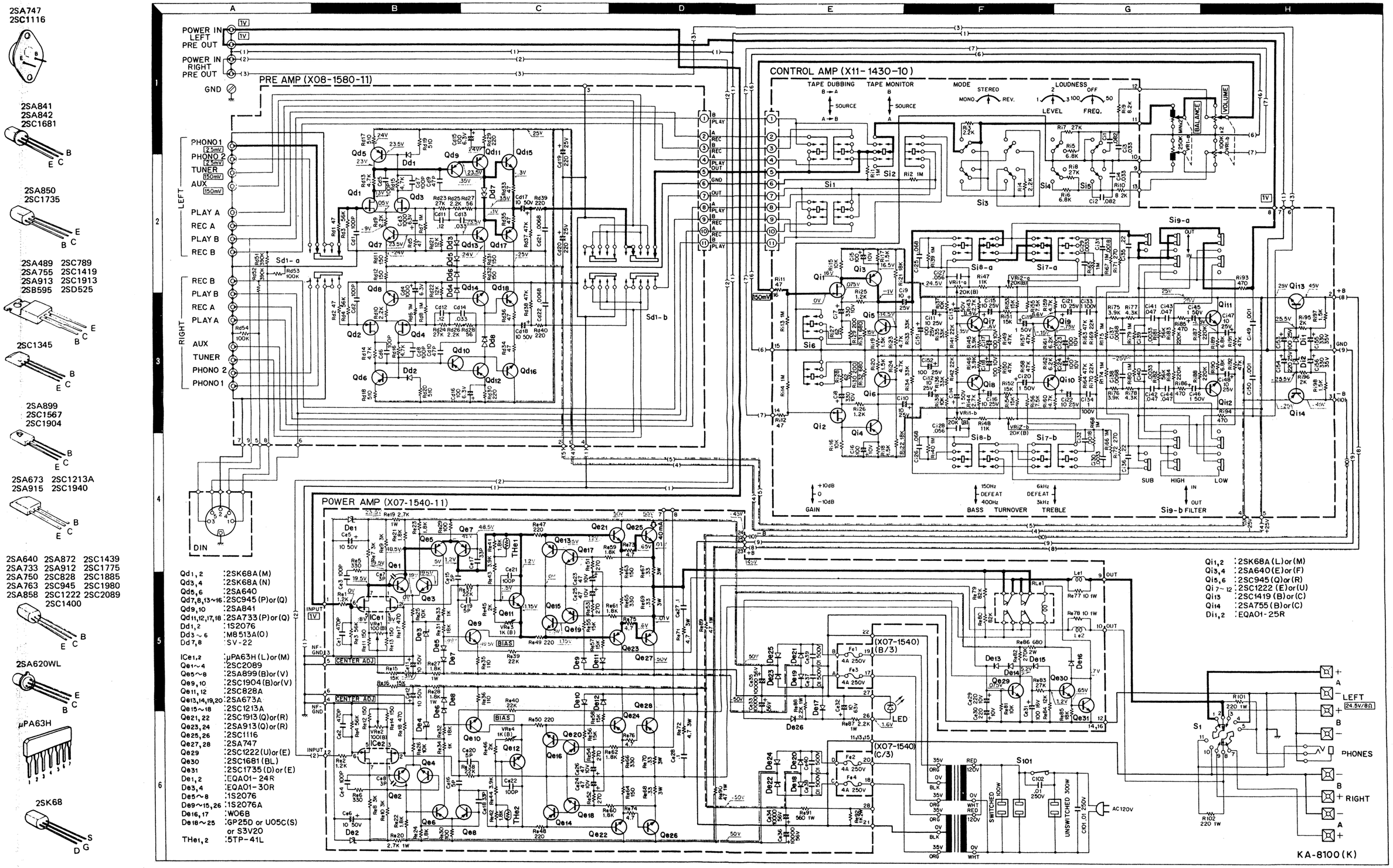

DC voltage are measure with 20 kΩ/V meter under no signal.

KA-8100

SPECIFICATIONS

POWER AMPLIFIER SECTION

POWER OUTPUT

75 watts per channel minimum RMS, at 8 ohms, from 20 Hz to 20,000 Hz with no more than 0.03% total harmonic distortion.

Both Channels Driven	75 + 75 watts 8 ohms at 1,000 Hz
	90 + 90 watts 4 ohms at 1,000 Hz
Dynamic Power Output	330 watts 4 ohms
Total Harmonic Distortion	0.03% at rated power into 8 ohms
	0.01% at 1 watt into 8 ohms
Intermodulation Distortion	0.03% at rated power into 8 ohms
(60 Hz : 7 kHz = 4 : 1)	0.01% at 1 watt into 8 ohms
Power Bandwidth	5 Hz to 50,000 Hz
Frequency Response	DC to 100,000 Hz +0 dB, −1.5 dB
Signal to Noise Ratio (IHF A)	115 dB (short circuited)
Damping Factor	50 at 8 ohms
Input Sensitivity/Impedance	1.0V/50 kohms
Speaker Impedance	Accept 4 ohms to 16 ohms

PRE AMPLIFIER SECTION

Input Sensitivity/Impedance/Signal to Noise Ratio (IHF. A)	
Phono 1	2.5 mV/ 50 kohms/ 85 dB
Phono 2	2.5 mV/ 50 kohms/ 85 dB
Tuner	150 mV/ 50 kohms/ 110 dB
AUX	150 mV/ 50 kohms/ 110 dB
Tape A, B	150 mV/ 50 kohms/ 110 dB
Maximum Input Level for Phono 1	250 mV (rms), T.H.D. 0.02% at 1,000 Hz
Output Level/Impedance	
Tape REC (Pin)	150 mV/ 220 ohms
(DIN)	30 mV/ 80 kohms
PRE OUT	1 V / 470 ohms
Frequency Response	
Phono	RIAA standard curve +0.2 dB, −0.2 dB
AUX & Tape	7 Hz to 50,000 Hz +0 dB, −1 dB
Tone Control	
Bass (Turnover at 150 Hz)	±7.5 dB at 50 Hz
(Turnover at 400 Hz)	±7.5 dB at 100 Hz
Treble (Turnover at 3 kHz)	±7.5 dB at 10,000 Hz
(Turnover at 6 kHz)	±7.5 dB at 20,000 Hz
Loudness Control	1 at 50 Hz 1) +3 dB, 2) +6 dB, 3) +9 dB
(at −30 dB Volume Level)	2 at 100 Hz 1) +3 dB, 2) +6 dB, 3) +9 dB
GAIN Control	+10 dB, 0 dB, −10 dB
Subsonic Filter	18 Hz, 6 dB/oct
Low Filter	40 Hz, 12 dB/oct
High Filter	8 kHz, 12 dB/oct

GENERAL

Power Consumption	600 watts at full power
Dimensions	W 16-15/16" (430 mm)
	H 5-7/8" (149 mm)
	D 15-1/8" (384 mm)
Weight (Net)	32.0 lbs. (14.5 kg)
(Gross)	32.6 lbs (16 kg)

Note: Trio follows a policy of continuous advancements in development. For this reason specifications may be changed without notice.