209

[redacted]

SERVICE MANUAL FOR 342C SOLID STATE RECEIVER

3.82C

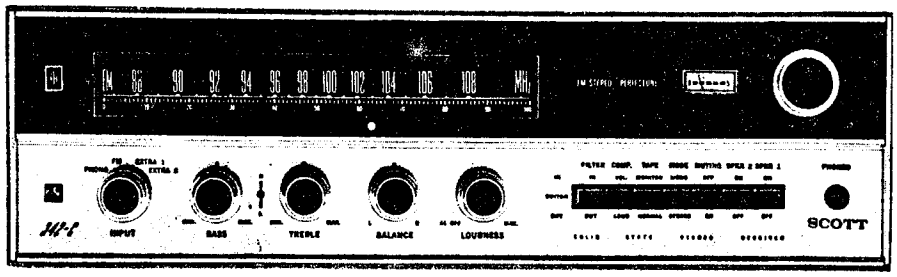

Scott . . . where innovation is a tradition

SCOTT®

H. H. Scott, Inc. 111 Powdermill Road, Maynard, Mass., 01754

© Copyright H. H. Scott, Inc. 1969

029-1175-001

Pocket

PC BOARD LAYOUT

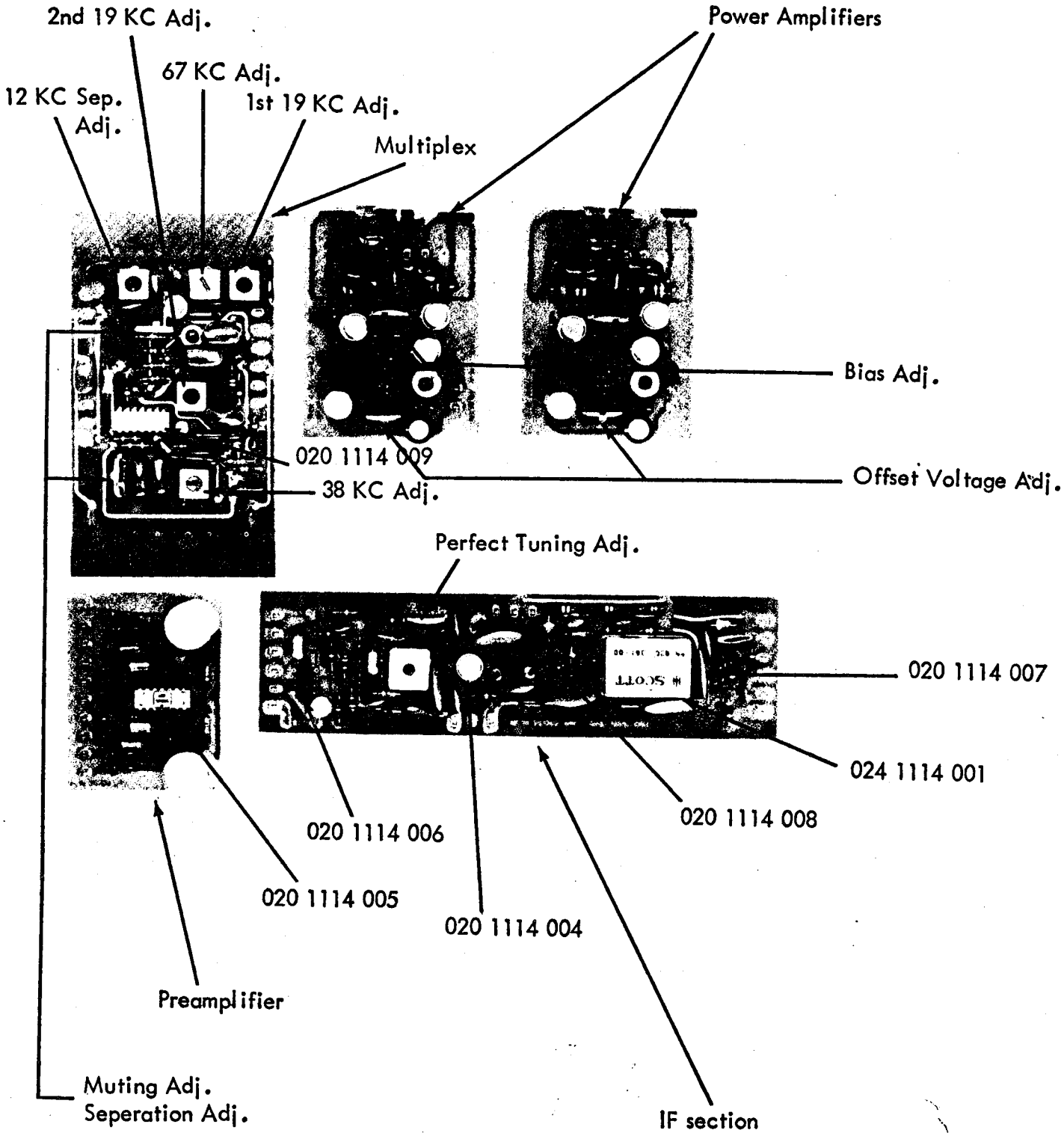

AUDIO SECTION

Equipment Needed

Audio Oscillator
VTVM
Oscilloscope
Triplett VOM or equivalent
8 ohm load
Attenuator
Distortion Meter
117 V. Source

Set Controls to the Following:

Sp-2	OFF
Input Selector	Extra-2
Stereo Switch	Stereo
Tone Controls	Flat "0"
Loudness-A.C.	Full CCW
Vol. Comp.	Loud
Sp-1	ON
Balance Pot.	Flat "0"

Preliminary Visual Inspection and Continuity Checks

Inspect unit for defects such as broken wafers, loose stand-up resistors, cracked terminals and jacks, and other such defects. See transistor precaution list. Turn bias max. ccw.

1. Offset, Bias and Voltage Checks

Turn unit on. Watch carefully for any signs of voltage shorts. Check main supplies for +27 volts and -27 volts. At the emitter of the QP-11 on the power supply bracket, check for 12VDC.
Bias measurements have to be taken with triplet meter directly across either 82 ohm resistor on driver board. With both leads on either resistor adjust Bias pot (pot nearest rear panel) for .6MA (12 MA scale).
Offset voltage will be measured between either channels output terminal and ground, for 0 volts ± 100 millivolts.

2. Sensitivity Check

Input selector to extra-1 at .40 (+2 db) input. Connect 8 ohm load to Sp-1 jacks. Turn loudness pot to max., observe output of 24.5 watts (14 V). Check tape output jack with troubleshooting lead for same input signal as above.

3. Distortion Check

At 14 V output max. distortion 0.6%.

3a. Balance Pot

With input and output connected to left channel, note loss of 0 db when pot is rotated to "L" position. When pot is rotated to "R", note a 45 db drop in output. With input and output in the right channel, pot rotation to "R" will indicate no drop in output, and in "L" position a 45 db drop will occur.

4. Tape Monitor Switch Check

Audio Osc. to EXTRA at .4V input to "L" channel. Note output at left channel speaker terminal. Put tape monitor switch in the IN position. Note loss of output. Connect jumper cable from "L" channel to tape OUT to "L" channel tape IN. Note restoration of signal out. Repeat process for "R" channel, then return tape monitor switch to OUT position.

5. Speaker Switch & Phone Jack Check

Sp-1 switch to OFF position. Note complete loss of signal. Loudness to min. Insert phone plug to phone jack, remove speaker leads and connect to phone plug leads. Loudness to max. Note drop of 26 + 2 db. Switch #1 speakers in. Note restoration of signal. 8 ohm load to speaker #2 jacks. Speaker #1 switch OFF, speaker #2 switch ON, note same output as #1 speakers. With speaker #1 and speaker #2 switches ON, note drop in output of 1 to 2 db. Return speaker switch to Speaker #1 ON and speaker #2 OFF and load to speaker #1 jacks.

6. Loudness Volume Check

Loudness Vol. Sw. to LOUD pos. Loudness pot to 4 flat pos., osc. to 1 KHz. Take ref. Osc. to 100 Hz. Note rise of 7 ± 2 db. Switch osc. to 10 KHz. Note change of 0 ± 2 db. Loudness vol. sw. to VOL. pos., osc. to 1 KHz. Take ref. At 100 Hz and 10 KHz 0 ± 2 db from original ref. Loudness pot to max., osc. at 1 KHz, output 14 V. Loudness pot to min. Note drop of 70 db. Loudness pot to max.

7. Tracking Check

In 10 db steps check tracking of L & R channels. Output may be no more than 3 db between channels down to 40 db down.

8. Crosstalk and Stereo Switch Check

At 1 KHz loudness pot to max, output to 14 V, mono-stereo switch to STEREO. Remove input and place in opposite channel, output from opposite channel should be down 45 db. Return controls to previous settings and attenuate to 0 db on 1 V. range.

9. Tone Control Check (0 db 1 V Range)

Bass 100 Hz		Treble 10 KHz	
Boost	- 10 db ± 2 db	Boost	- 10 db ± 2 db
Cut	- 10 db ± 2 db	Cut	- 10 db ± 2 db

10. Frequency Response Check (Approx. 1 watt level)

Osc. 0 db 1 KHz reference on 1 V range. Sweep osc. from 35 Hz to 20 KHz, note maximum variation of +2 db. 3 db down point 20 Hz or lower
3 db down point 25-35 KHz

11. Regulation Check

At 1 KHz 0 db 1 V range remove 8 ohm load switch. Output rise of 1 db max.

12. Preamp Gain Check @ 1 KHz

Attenuate input 42 db, input leads to phono. Output 0 db 1 V range ± 1 db Stereo mono switch to MONO, note drop of 6 db in output. Stereo mono switch to STEREO.

13. Preamp Frequency Response Check

1 KHz	0 db (ref)
10 KHz	-13 ± 2 db
100 KHz	+13 ± 2 db

14. Hum Checks (input shorted)

Position	Loudness Pot	Max Hum
Extra	0	5 mV
Extra	10	5 mV
Phono	10	30 mV

15. Repeat steps 2 through 15 for "R" channel.

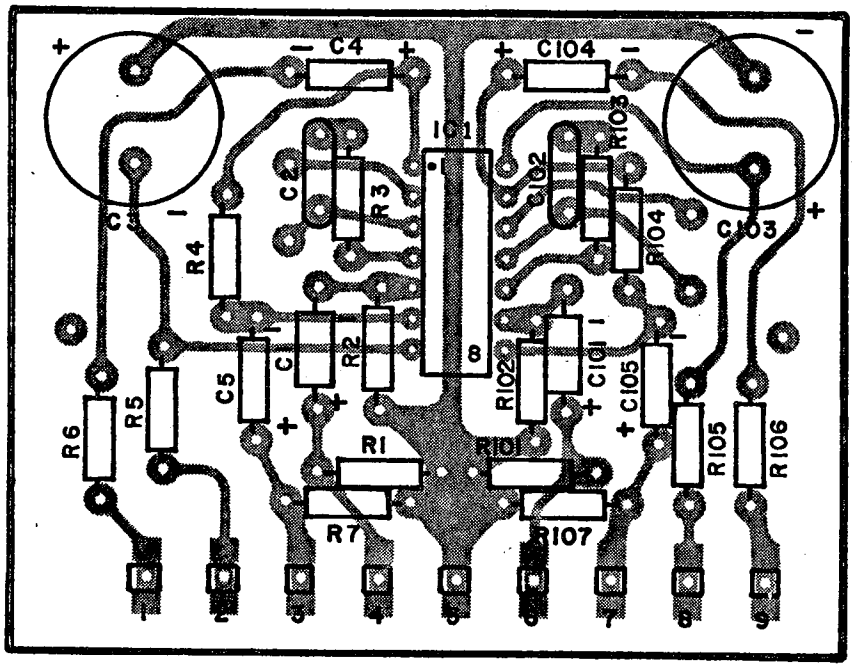

PRE AMP

NOTE: 1. CIRCLE MARK ON TOP OR INDENTATION ON LEG OF IC INDICATES PIN NO. 1

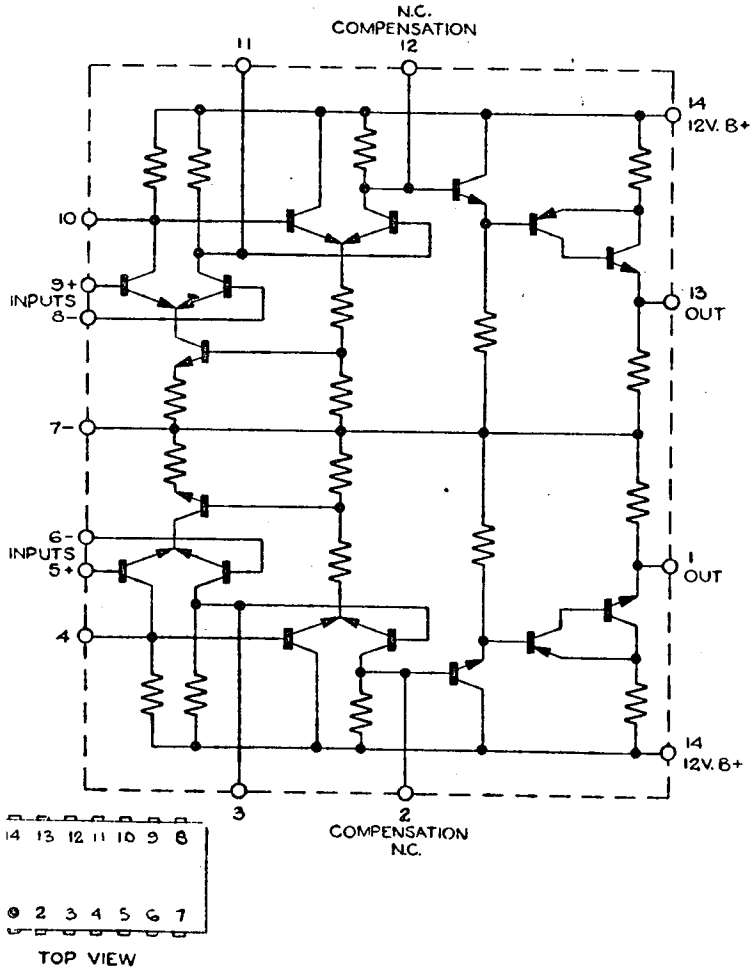

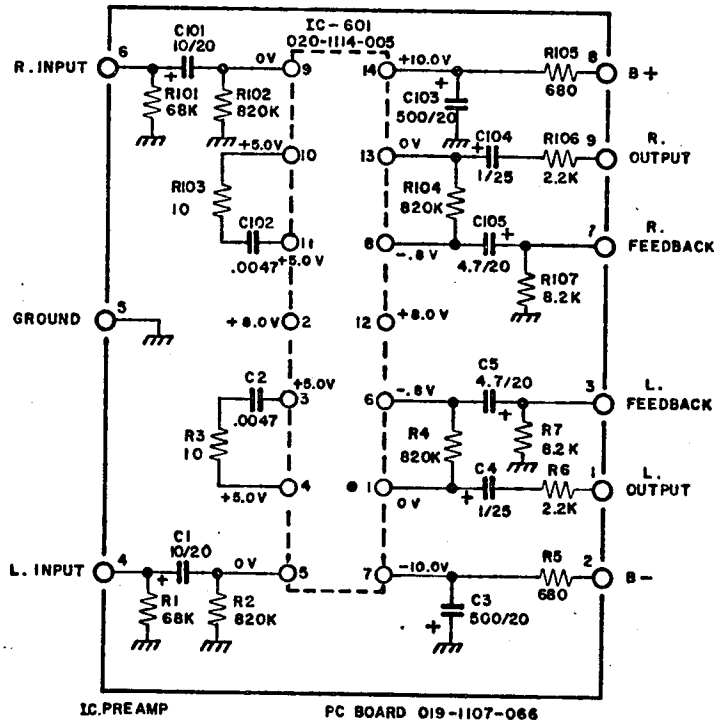

NOTES:

1. UNLESS OTHERWISE SPECIFIED, ALL RESISTANCE IN OHMS, ±10%, 1/4 WATT, CAPACITANCE IN MICROFARADS.
2. HIGHEST SERIES NUMBERS ARE: R7, R107, C5, C105, IC-601.
3. CIRCLE MARK ON TOP OR INDENTATION ON LEG OF IC INDICATES PIN NO. 1.

Q1, Q101, 020-1112-005

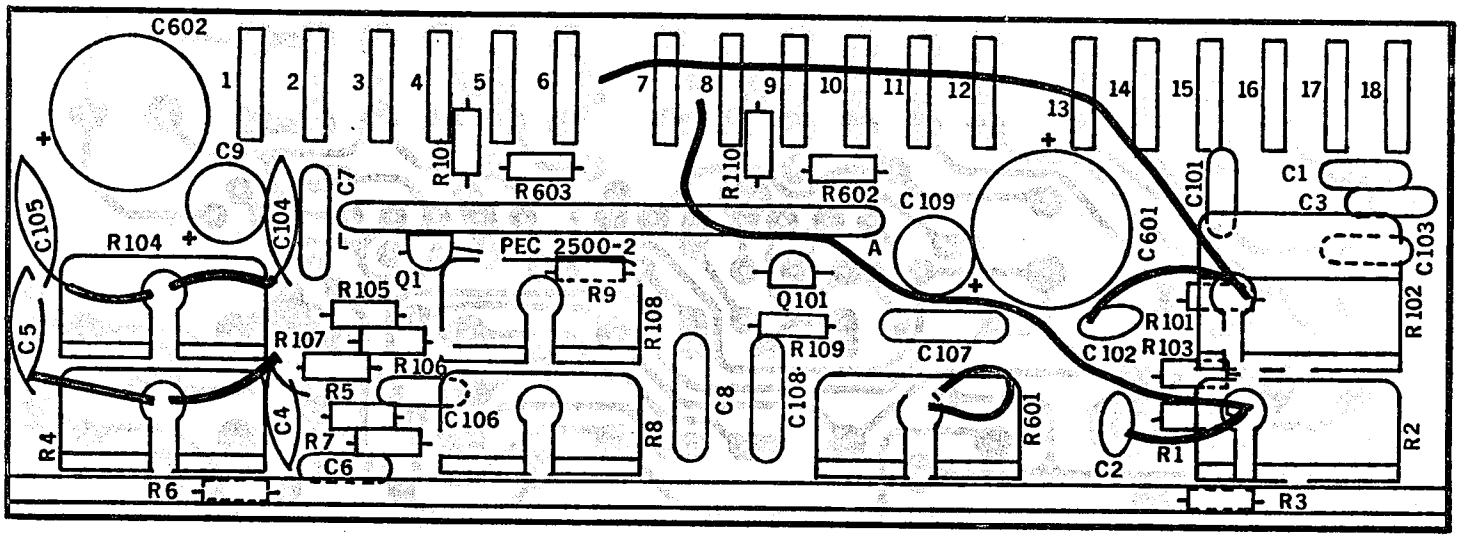

TONE CONTROL & LOUDNESS

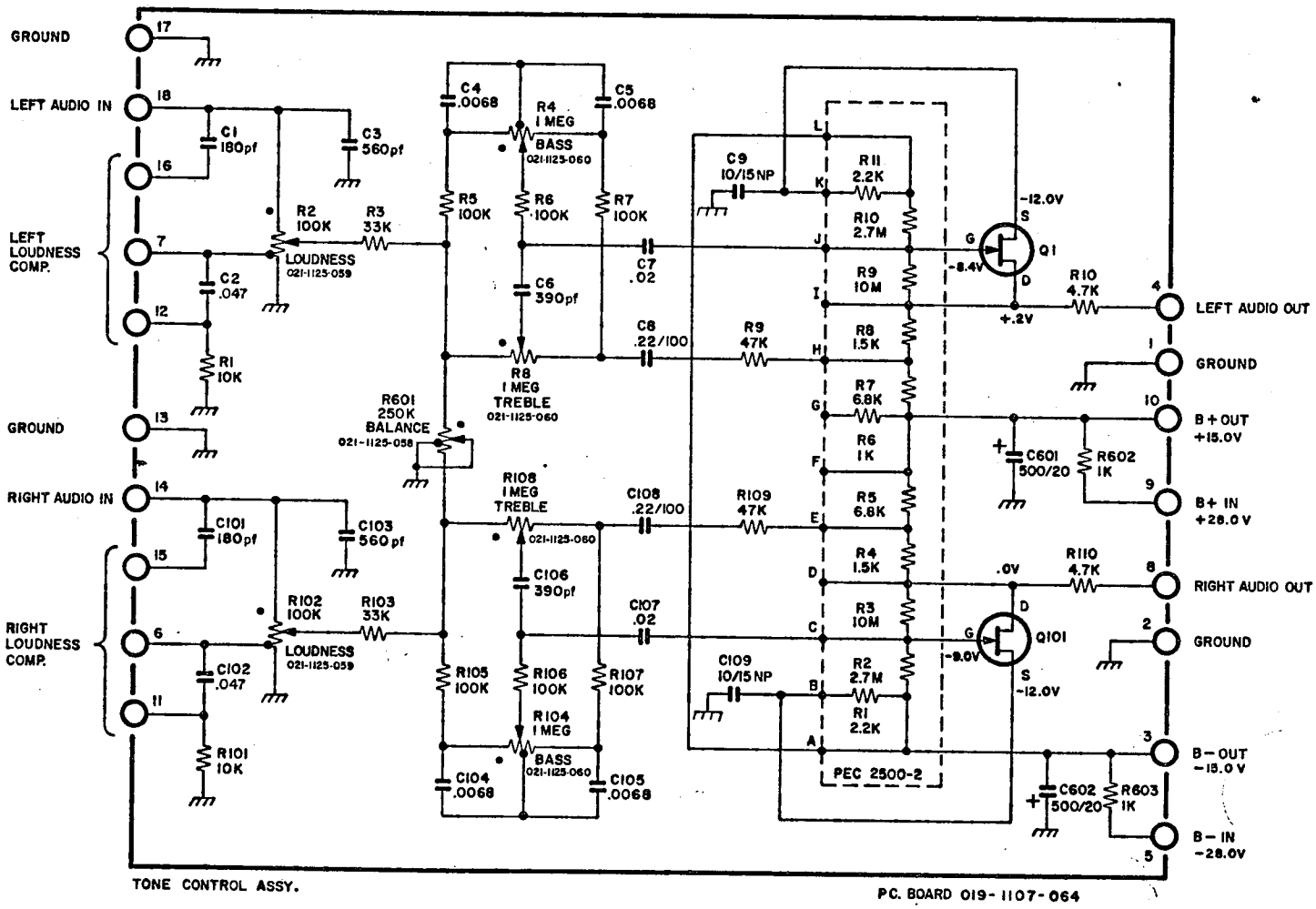

TONE CONTROL ASSY.

PC. BOARD 019-1107-064

6. DOT ON POTENTIOMETER INDICATES EXTREME CW POTITION VIEWED FROM KNOB END

NOTES:
1. UNLESS OTHERWISE SPECIFIED: RESISTANCE IN OHMS ±10% 1/4 WATT, AND CAPACITANCE IN MFD'S.
2. Q1, Q101 ARE H.H.SCOTT® 020-1112-005.
3. HIGHEST SERIES NO'S ARE: R10, R110, R603, C9, C109, C602, Q1, Q101
4. WHEN TONE CONTROLS ARE IN FLAT POSITION, THE OVERALL VOLTAGE GAIN OF THIS CIRCUIT IS APPROXIMATELY UNITY. (0db)
5. THE FOLLOWING CONTROLS IN THE LEFT CHANNEL ARE MECHANICALLY CLUTCHED WITH IDENTICAL CONTROLS IN THE RIGHT CHANNEL, LOUDNESS, BALANCE, TREBLE, BASS.

Q301 ; S1990
Q302 : QA-10
Q303 ; QA-10
Q304 ; QA-17
Q305 ; 2801 - 020-1111-010
Q306; 2901 - 020-1111-011

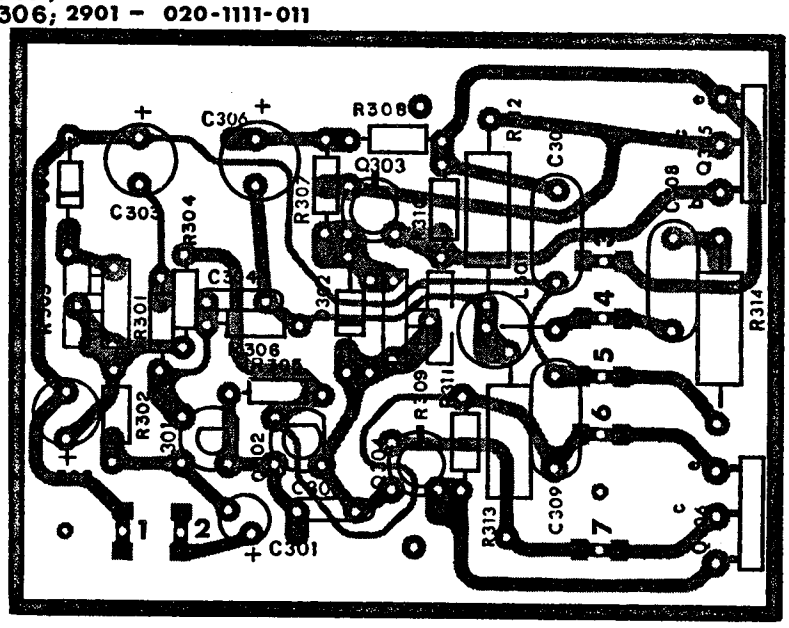

POWER AMP. DRIVER

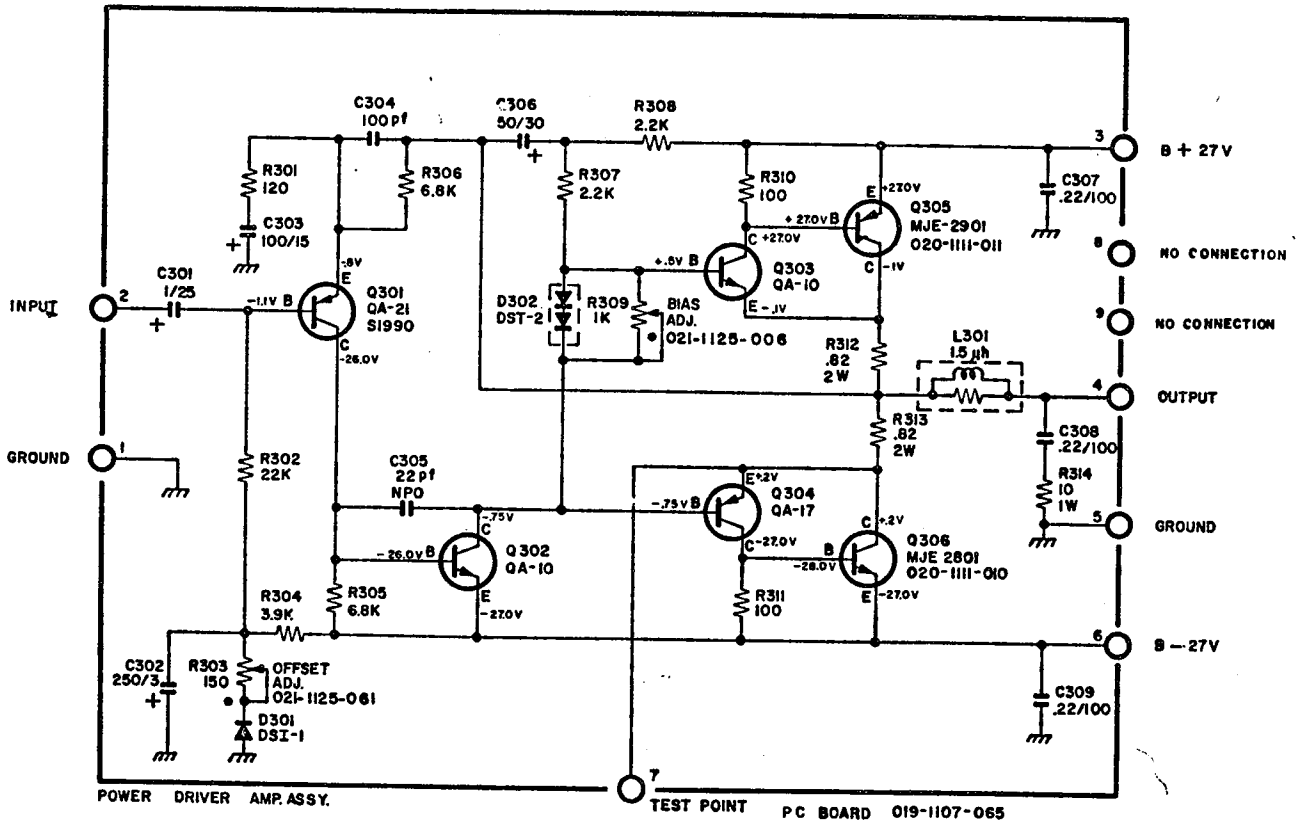

NOTES:

1. UNLESS OTHERWISE SPECIFIED-ALL RESISTANCE IN OHMS, ±10%, 1/4 WATT, CAPACITANCE IN MFD'S.
2. HIGHEST SERIES NUMBERS ARE: R314, C309, D302, Q306, L301
3. DOT ON POTENTIOMETER INDICATES EXTREME CW POSITION VIEWED FROM KNOB END.

TUNER SECTION

Equipment Needed

VTVM
Oscilloscope
Triplett VOM
Distortion Meter
FM Generator (or source)
MX Generator (or source)
Audio Generator (or source)

Set Controls to the Following:

Input Select. Switch FM

Preliminary Checks

Inspect unit for defects such as broken wafers, cracked terminals and jacks, binding tuning condensor, broken components, lead dress. Make certain all transistors are firmly seated in correct sockets. Take output from Tape Out Jacks.

1. Mono Alignment and Sensitivity Check

Front End and IF Alignment

With about 10 uV generator output, align and peak front end for max. output. With 1 or 2 K uV input, align detector. Bottom slug for Max. audio output and top slug for min. distortion and perfectune light to light.

2. Sensitivity and Distortion

Measure sensitivity of tuner with 6 uV rf input. Must obtain 30 db usable sensitivity at 92, and 106 MHz.

Recheck distortion, 2 K uV input. 400 Hz - max. distortion of 0.8%. Audio output spec. at 1 K 1.5 to 2.5 and AGC meter spec at 1 K at least 3 divisions.

3. FM Hum Check

Modulation Off, measure min. of 55 db (may reverse ac plug).

De-emphasis Check
Change mod. to 82 KHz, note decrease of 12 ± 2 db in output.

Calibration Check
Check all calibration against stations - max. tolerance ± 2 MHz.

MULTIPLEX ALIGNMENT

1. With the two pots at max in direction shown by Fig. 1, prepare to align the 67 Kc trap and the HF SEP trap. Tune to a signal modulated with 67 Kc and with a low capacity troubleshooting probe on pin 3, adjust the 67 Kc trap for minimum output. Leave probe on pin 3, insert composite stereo signal and adjust HF SEP trap for a straight base line as shown in Fig. 4.

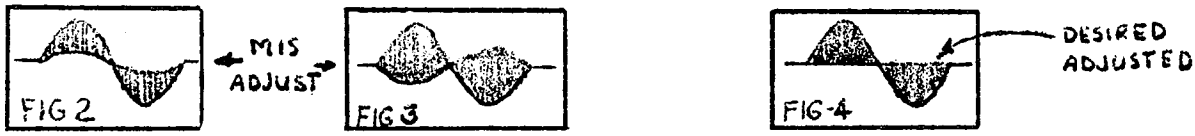

(IF THE NEXT SET OF ADJUSTMENTS ARE NOT DONE CAREFULLY, PROPER SEPARATION WILL BE DIFFICULT TO ACHIEVE)

2. Move probe to pin 1, while still on a stereo signal adjust first 19 Kc can for maximum output. The second 19 Kc can should also be adjusted at this point for maximum output.

3. Move troubleshooting probe to pin 13 and align the 38 Kc can for maximum output. (No alignment of the 19 Kc circuits should be done with troubleshooting probe at this point.)

4. Now that all the alignment has been completed, separation can be achieved in the usual manner by rotating the separation pot, adjust for MAXIMUM achievable separation (absolute minumum of 30 db).

5. Any phasing that is required must only be done by slight adjustment of the first 19 Kc can and only the first 19 Kc can.

If the 19 Kc and 38 Kc adjustments were done carefully, separation should fall within ± 2 db between channels and going back and forth between stereo signals for readjustment should not be necessary.

6. To set stereo light and muting, set muting switch to ON position, adjust mute light and adjust pot until unit mutes. (tune to either end of band, adjust on noise).

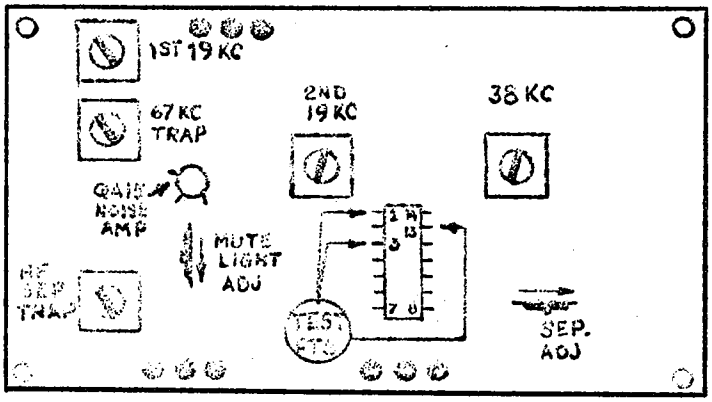

FIG 1

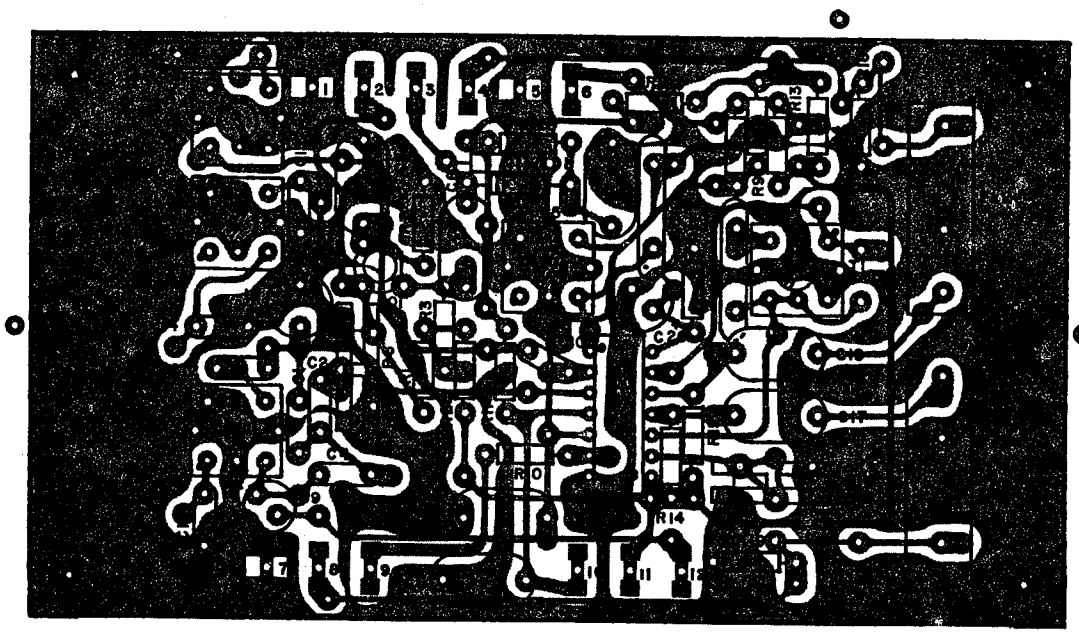

IC MULTIPLEX

NOTES:

1. CIRCLE MARK ON TOP OR INDENTATION ON LEG OF IC INDICATES PIN NO. 1
2. GREEN DOT ON TOP OF TRANSFORMER OR COIL CAN INDICATES PIN NO. 1

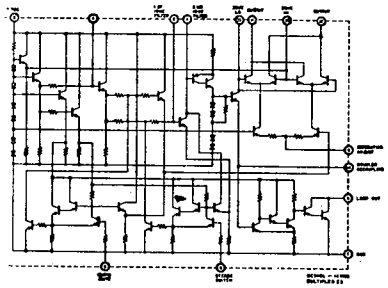

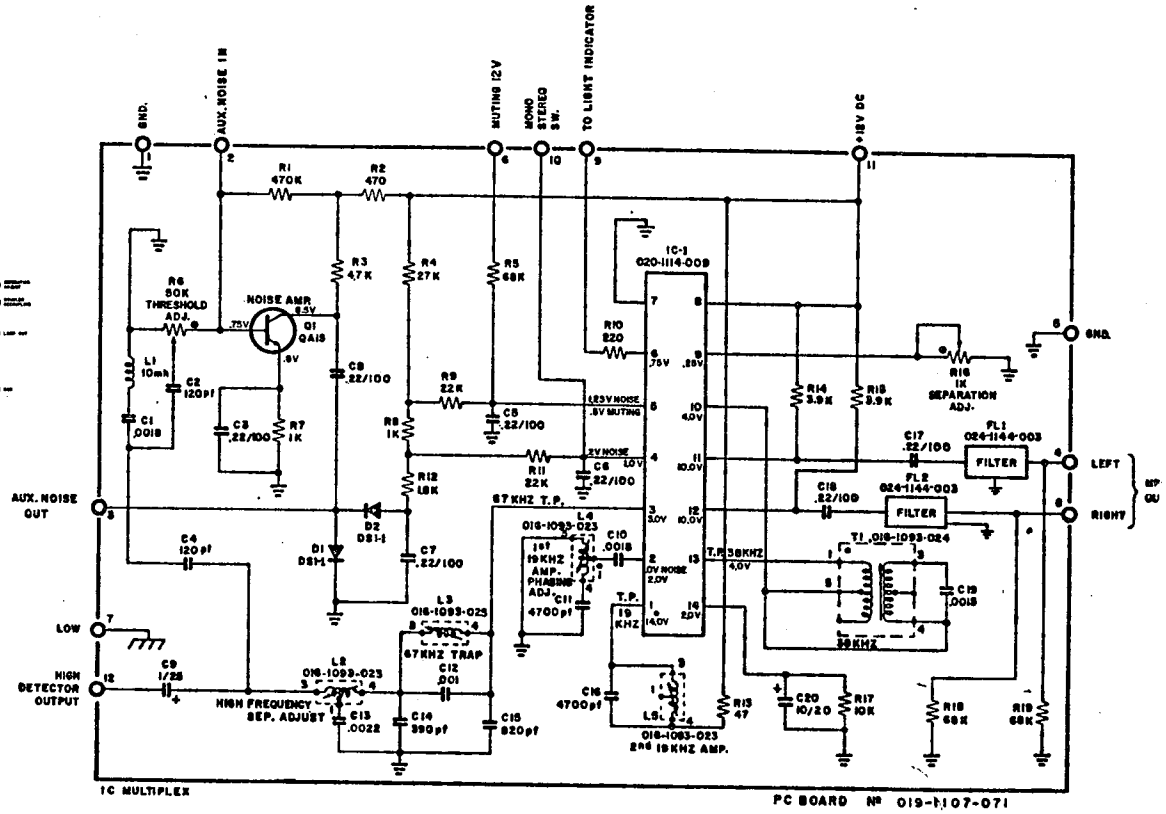

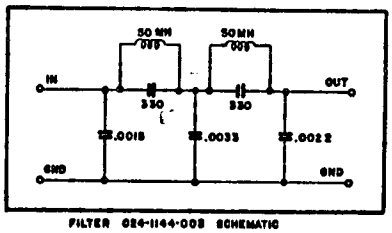

FILTER 024-1144-003 SCHEMATIC

IC-301	µA703	020-1114-001
IC-302	µA703	020-1114-001
IC-303	µA719	020-1114-004
IC-304	(SC5117)	020-1114-006
FL-301		024-1144-001

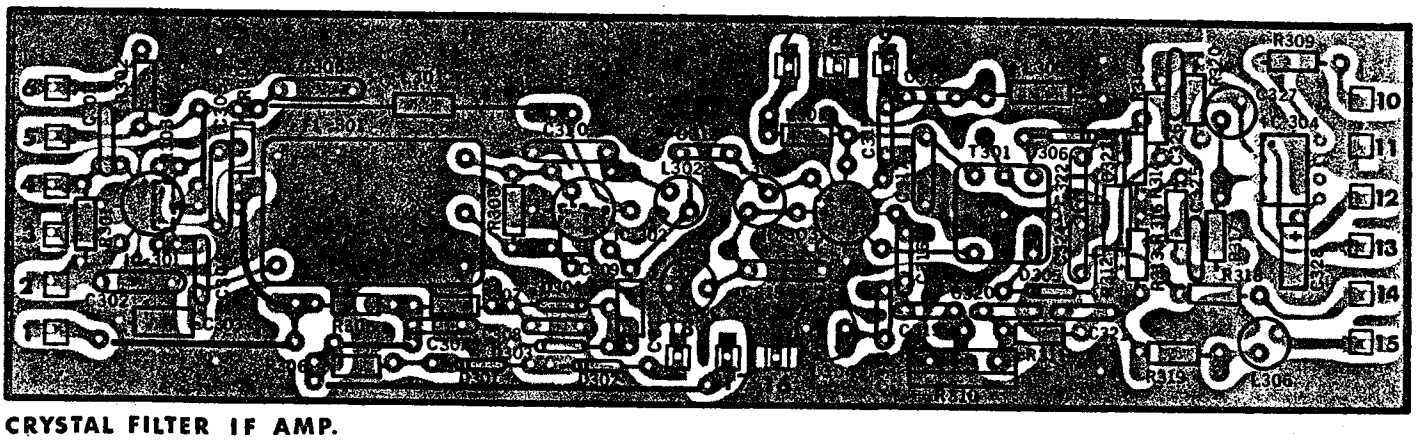

CRYSTAL FILTER IF AMP.

NOTE:
• INDICATES PIN # 1

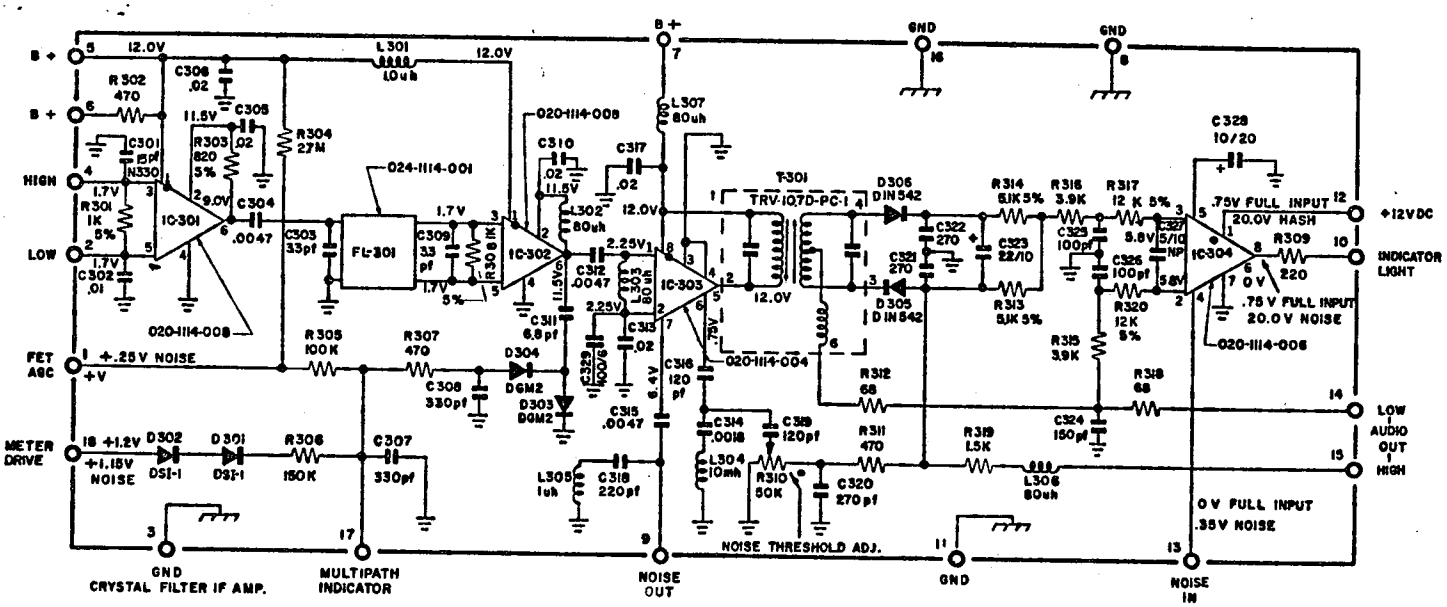

PC BOARD 019-1107-061

NOTES:
1. UNLESS OTHERWISE SPECIFIED; RESISTANCE IN OHMS ± 10% 1/4 WATT, AND CAPACITANCE IN MFD'S
2. HIGHEST SERIES IC 304, FL301, T301, L307, C329 R320, D306
3. DOT ON POTENTIOMETER INDICATES EXTREME CW POSITION VIEWED FROM KNOB END.

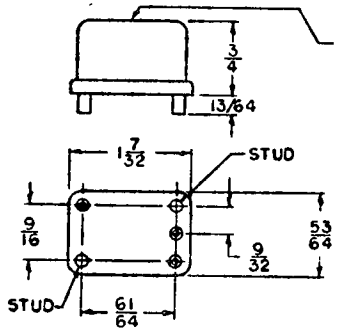

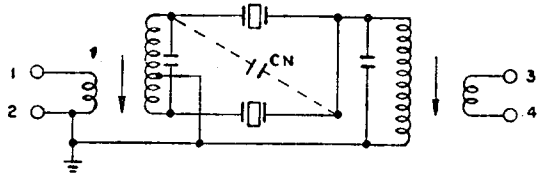

CIRCUIT

SPECIFICATIONS

CENTER FREQUENCY:	10.7 MHz
3 dB BANDWIDTH:	240 kHz (MIN.)
20 dB BANDWIDTH:	600 kHz (MAX.)
40 dB BANDWIDTH:	1200 kHz (MAX.)
INSERTION LOSS:	6 dB (MAX.)
TERMINATING IMPEDANCE:	IN/OUT 900 ohms/10 pF
OPERATING TEMPERATURE RANGE:	-10°C TO 50°C
PASS BAND RIPPLE:	1 dB (MAX.@ 20°C TO 50°C)

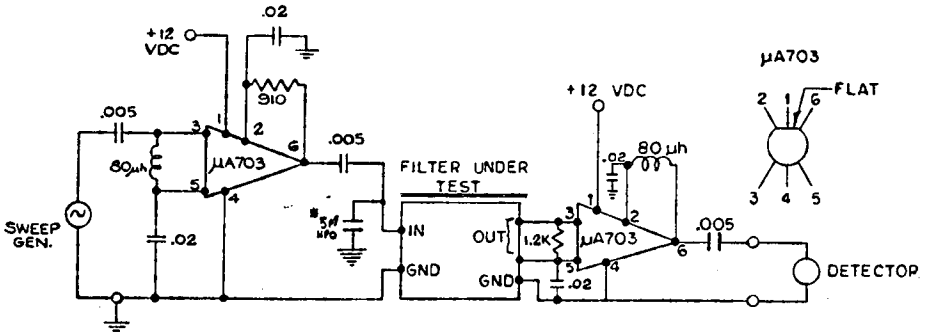

CRYSTAL FILTER TEST CIRCUIT

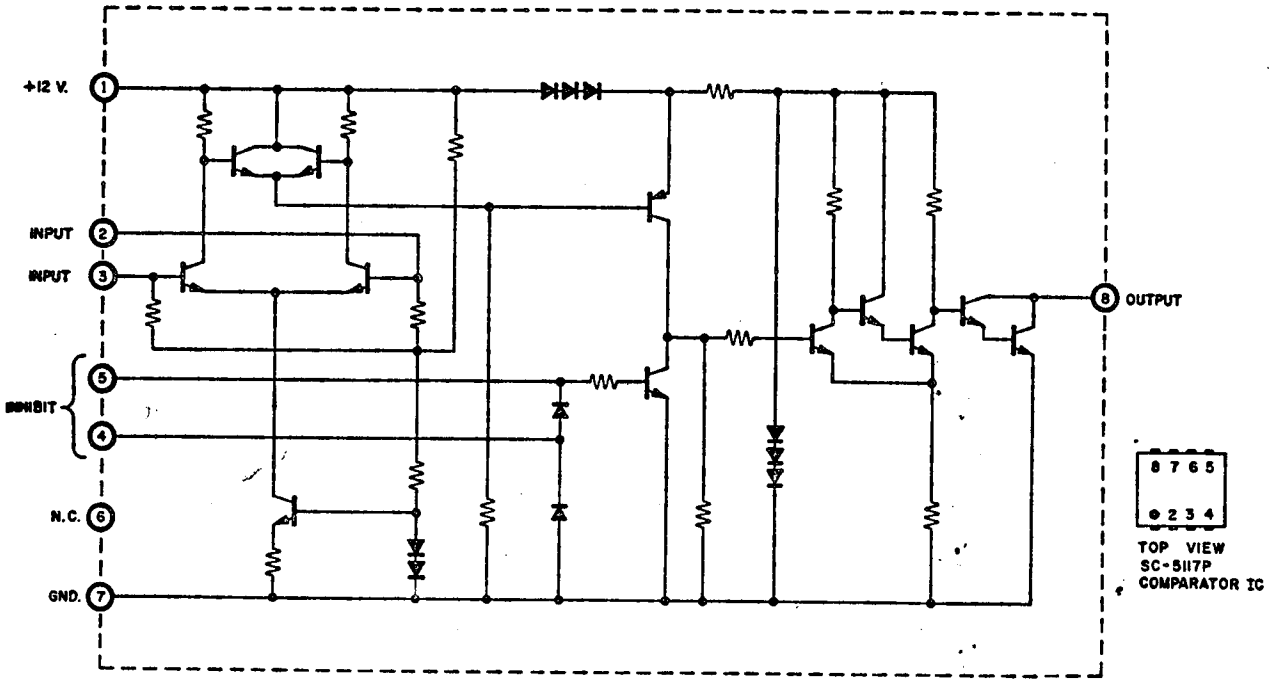

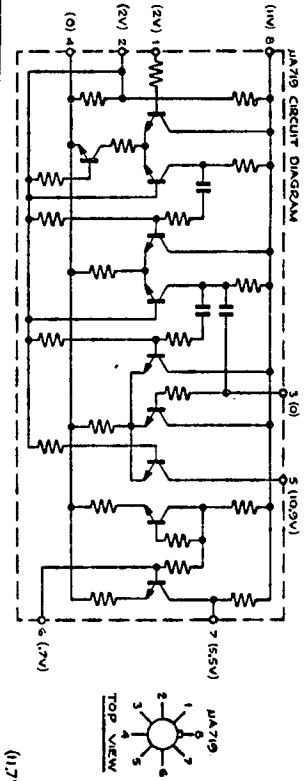

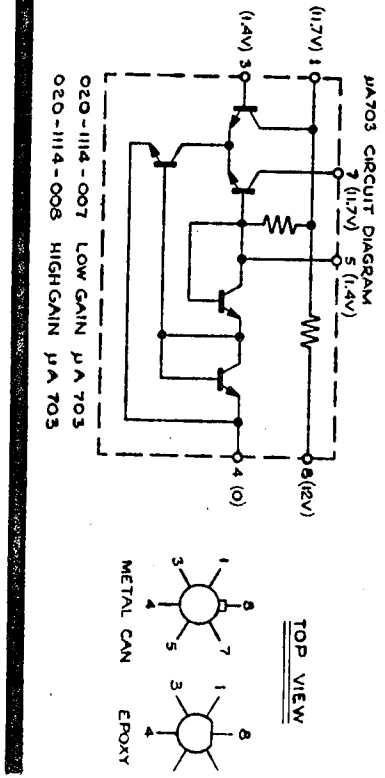

Q201, -QRF-3
Q202,Q203, -QRF-2

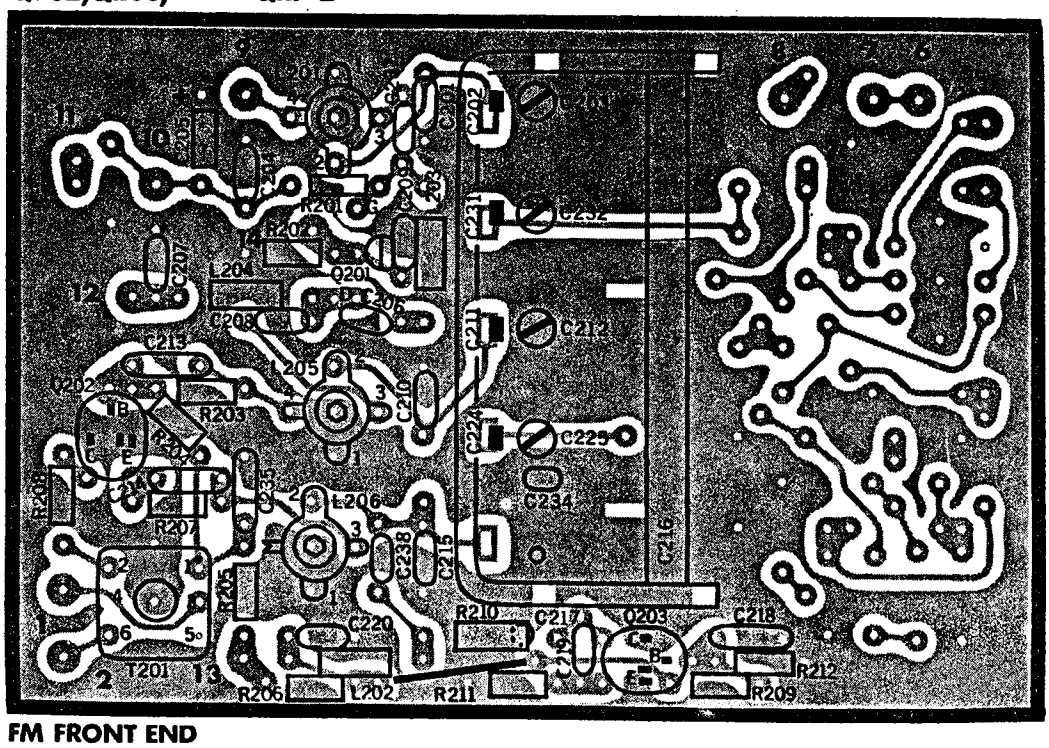

FM FRONT END

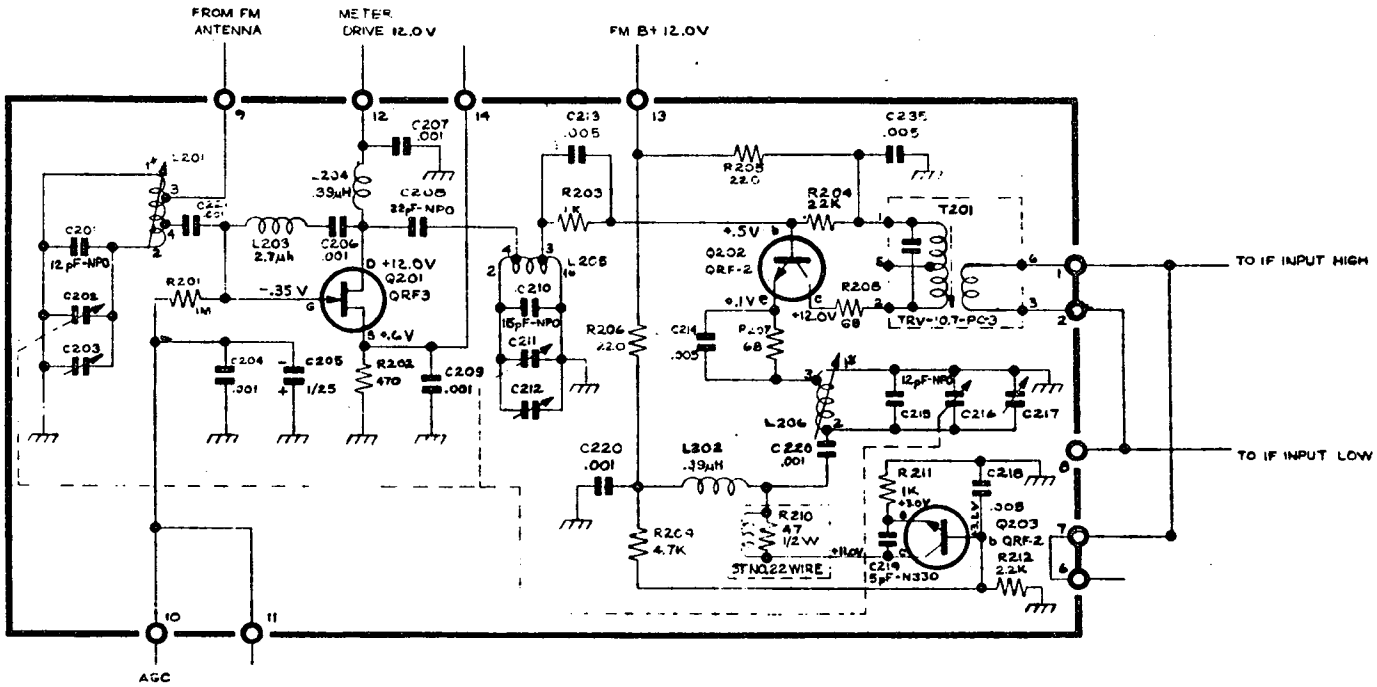

NOTES:
1. UNLESS OTHERWISE SPECIFIED RESISTANCE IN OHMS ±10%. RESISTORS 1/4 WATT. CAPACITANCE IN MFD'S.
2. * INDICATES START OF COIL WINDING.
3. ALL VOLTAGES ARE WITH SIGNAL APPLIED

BOTTOM VIEW
STANDARD TRV CAN

HIGHEST SERIES NUMBERS

R212
C221
L206
T201
Q203

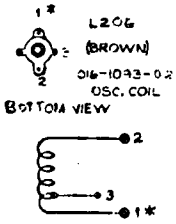

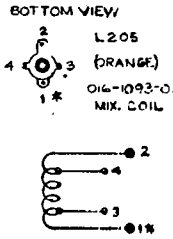

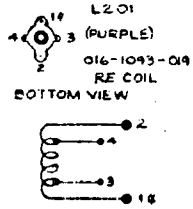

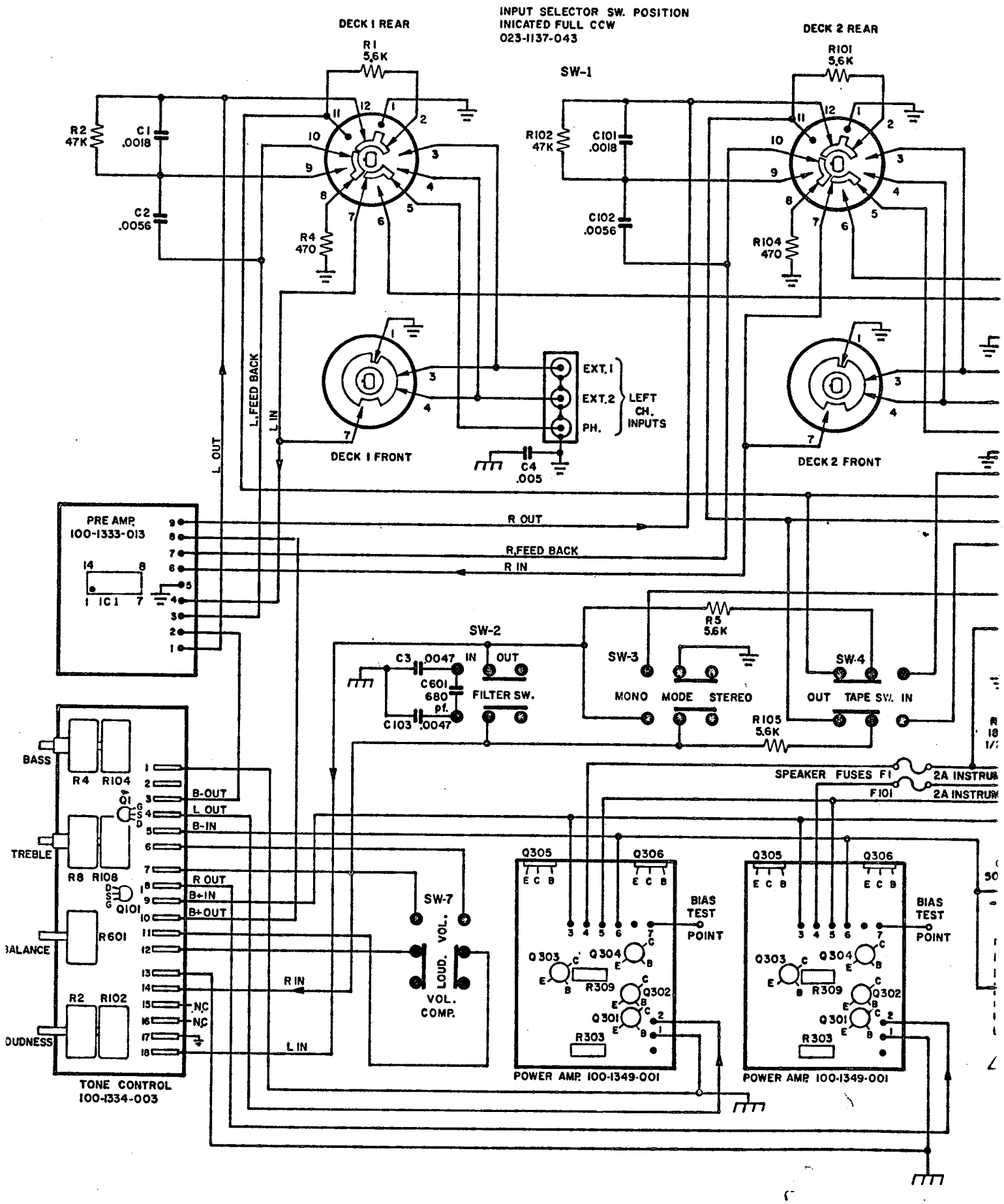
INPUT SELECTOR SW. POSITION
INICATED FULL CCW
023-1137-043
DECK 1 REAR
R1
5.6K
SW-1
DECK 2 REAR
R101
5.6K
R2
47K
C1
.0018
C2
.0056
R4
470
R102
47K
C101
.0018
C102
.0056
R104
470
EXT.1
EXT.2
PH.
LEFT
CH.
INPUTS
DECK 1 FRONT
C4
.005
DECK 2 FRONT
L. FEED BACK
L IN
L OUT
PRE AMP.
100-1333-013
IC1
R OUT
R.FEED BACK
R IN
SW-2
C3
.0047
IN
OUT
C601
680
pf.
FILTER SW.
C103
.0047
R5
5.6K
SW-3
MONO
MODE
STEREO
SW-4
OUT
TAPE SW.
IN
R105
5.6K
SPEAKER FUSES F1
F101
2A INSTRUM
BASS
R4
R104
Q1
TREBLE
R8
R108
Q101
BALANCE
R601
R2
R102
LOUDNESS
B-OUT
L OUT
B-IN
R OUT
B+IN
B+OUT
R IN
NC
NC
L IN
TONE CONTROL
100-1334-003
SW-7
LOUD.
VOL.
VOL.
COMP.
Q305
Q306
BIAS
TEST
POINT
Q303
Q304
R309
Q302
Q301
R303
POWER AMP. 100-1349-001
POWER AMP. 100-1349-001

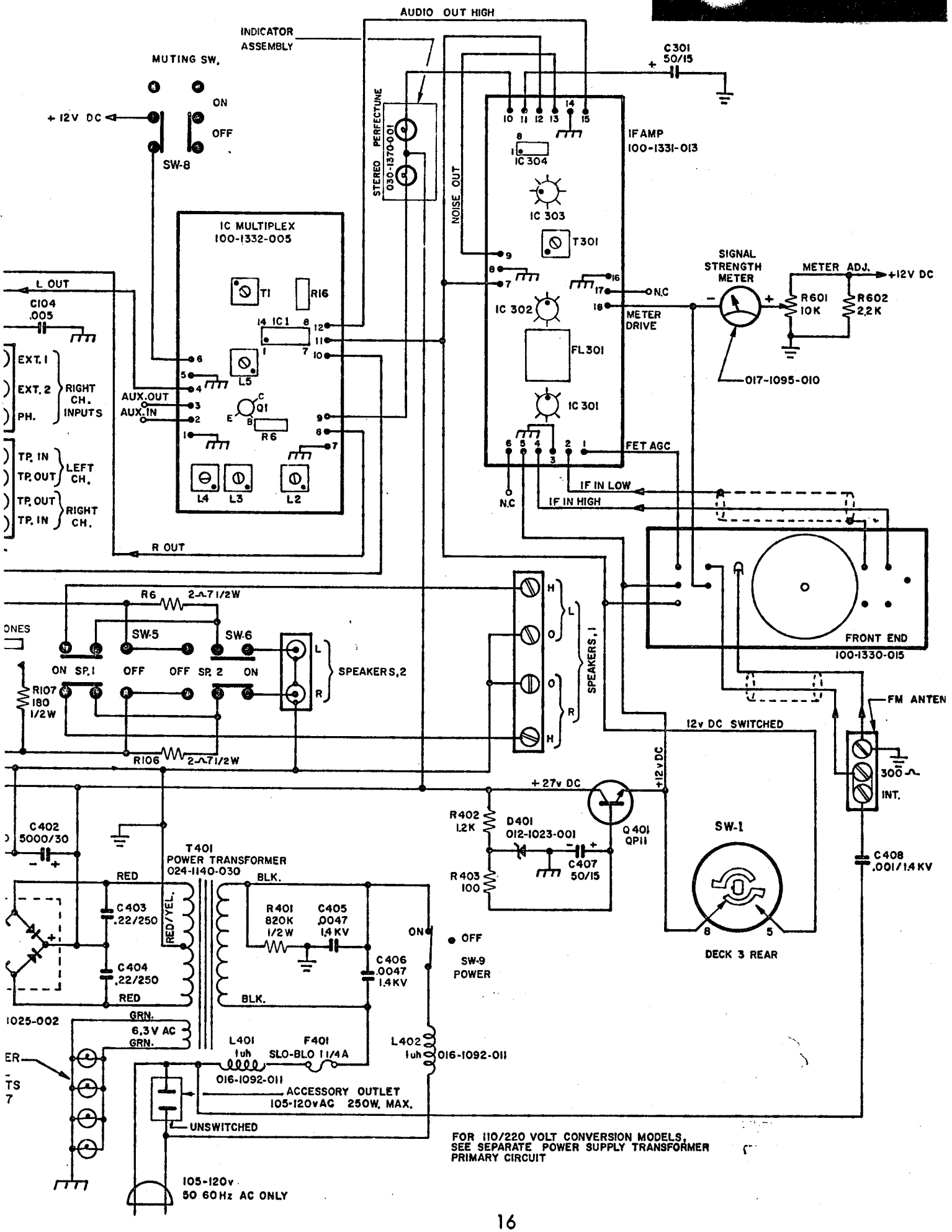
AUDIO OUT HIGH
INDICATOR ASSEMBLY
MUTING SW.
ON
OFF
+ 12V DC
SW-8
STEREO PERFECTUNE
030-1370-001
NOISE OUT
C301 50/15
IF AMP 100-1331-013
IC 304
IC 303
T301
IC MULTIPLEX 100-1332-005
T1
R16
IC 1
L5
Q1
R6
L4
L3
L2
L OUT
C104 .005
EXT. 1
EXT. 2
PH.
RIGHT CH. INPUTS
AUX. OUT
AUX. IN
TP. IN
TP. OUT
LEFT CH.
TP. OUT
TP. IN
RIGHT CH.
R OUT
SIGNAL STRENGTH METER
METER ADJ.
+12V DC
R601 10K
R602 2.2K
N.C
METER DRIVE
IC 302
FL301
IC 301
017-1095-010
FET AGC
IF IN LOW
IF IN HIGH
N.C
FRONT END 100-1330-015
R6 2-Ω 7 1/2W
SW-5
SW-6
ON SP. 1
OFF
OFF SP. 2
ON
SPEAKERS, 2
R107 180 1/2W
R106 2-Ω 7 1/2W
SPEAKERS, 1
FM ANTEN
12v DC SWITCHED
+12v DC
300 Ω
INT.
+ 27v DC
R402 1.2K
D401 012-1023-001
Q401 QP11
R403 100
C407 50/15
SW-1
DECK 3 REAR
C408 .001/1.4 KV
C402 5000/30
T401 POWER TRANSFORMER 024-1140-030
RED
BLK.
C403 .22/250
RED/YEL.
R401 820K 1/2W
C405 .0047 1.4 KV
C406 .0047 1.4KV
C404 .22/250
RED
BLK.
ON
OFF
SW-9 POWER
GRN.
6.3V AC
GRN.
L401 1uh
F401 SLO-BLO 1 1/4A
L402 1uh
016-1092-011
016-1092-011
ACCESSORY OUTLET 105-120vAC 250W. MAX.
UNSWITCHED
FOR 110/220 VOLT CONVERSION MODELS, SEE SEPARATE POWER SUPPLY TRANSFORMER PRIMARY CIRCUIT
105-120v 50 60Hz AC ONLY

342-C PARTS LIST

QTY. PER UNIT	PART NUMBER	DESCRIPTION	
2	011-1000-003	Ceramic Capacitor	CC-.005
2	011-1000-006	Ceramic Capacitor	CC-.0018
2	011-1000-009	Ceramic Capacitor	CC-.0033
2	011-1000-011	Ceramic Capacitor	CC-.0047/1.4KV
2	011-1000-012	Ceramic Capacitor	CC-.0056
1	011-1000-058	Ceramic Capacitor	CC-.680
1	011-1000-060	Ceramic Capacitor	CC-.001/1/4KV
1	011-1006-033	Electrolytic Capacitor	CETM-50/15
2	011-1004-022	Filter Capacitor	
1	011-1006-033	Tubular Capacitor	CETM-50/15
2	011-1008-003	Mylar Capacitor	CMM-.22/250v
1	012-1023-002	Zener Diode	DZ-13
1	012-1025-002	Bridge Rectifier	
4	013-1030-002	Speaker Fuse	F-AGX-2
1	013-1031-007	Fuse, Slo-blo	F-SB-1 1/4
1	015-1060-006	Input Jack	J-2-D
1	015-1060-003	Input Jack	J-2-Q
2	015-1060-005	Input Jack	J-2-T
1	015-1061-007	Phone Jack	J-3-ST-8
2	016-1092-011	Coil	L-RF-IS
1	017-1095-010	Meter	M-SS-11
3	018-1100-032	Single Knob	
2	018-1100-033	Rear Knob	
2	018-1100-034	Front Knob	
1	018-1100-035	Tuning Knob	
1	018-1102-087	Panel	
1	018-1104-008	Panel Inlay	
1	018-1105-066	FM Dial	
1	020-1111-003	Power Transistor	QP-11
1	021-1120-010	1/4 Watt Resistor	RC11-100
2	021-1120-018	1/4 Watt Resistor	RC11-470
1	021-1120-023	1/4 Watt Resistor	RC11-1.2K
1	021-1120-026	1/4 Watt Resistor	RC11-2.2K
4	021-1120-031	1/4 Watt Resistor	RC11-5.6K
2	021-1120-042	1/4 Watt Resistor	RC11-47K
2	021-1121-014	1/2 Watt Resistor	RC21-180
1	021-1121-058	1/2 Watt Resistor	RC21-820K
2	021-1121-023	1/2 Watt Resistor	RC21-1K
1	021-1123-033	Stand-up Resistor	RWS-15-2X2
1	021-1125-011	Potentiometer	RCV-10K-PH
1	023-1137-043	Rotary Switch	
1	023-1138-013	7 Section Switch	
1	024-1140-030	Power Transformer	
1	026-1156-001	Line Cord	W-P-6
1	028-1165-017	Carton	CT-HH
2	028-1166-114	Filler	CTF-HH-1
1	028-1166-143	Filler	
12	030-1181-021	6 Post AMP Connectors	
4	030-1189-008	Bulb	V-PL-1847
1	030-1190-006	Socket	X-PL-U4-7

342-C PARTS LIST

QTY. PER UNIT	PART NUMBER	DESCRIPTION	
3	030-1190-012	Socket	X-PL-U-10
1	030-1192-001	Fuse Post w/washer & nut	XF-3AG
2	030-1192-002	Fuse Post	XF-HJM
1	030-1193-001	Transistor Socket	X-Q-3
1	030-1194-003	AC Outlet, Red	X-AC-SAR
1	030-1370-001	Indicator Assembly	
1	031-1197-023	Dial Cord	
1	031-1198-013	Dial Pointer	
4	031-1200-001	Plastic Feet	A-FT-1
4	031-1203-001	Nylon Pulley	A-PY-3/8
1	031-1209-011	Spring	H-CS-4
1	031-1212-001	Deflector	A-X-40
1	031-1241-002	Fly-wheel Assembly	A-FW-B Assembly
14	031-1360-001	Nylon PC Stand-off's	
1	032-1250-206	Power Supply Brkt.	
1	032-1250-207	Switch Mtg. Brkt.	
1	032-1250-209	Diffuser Brkt.	
1	032-1250-219	Pulley Brkt.	
1	032-1250-220	Pulley Brkt.	
1	032-1250-203	Tone Control Brkt.	
1	032-1251-103	Bottom Cover	
1	032-1251-104	Top Cover	
1	032-1252-091	Rear Chassis	
1	032-1252-092	Main Chassis	
1	032-1252-093	Front Chassis	
1	035-1275-001	FM Antenna	Z-ANT-FM-2
1	100-1330-015	Front End Assy.	
1	100-1331-013	IF Board Assy.	
1	100-1332-005	Multiplex Board Assy.	
1	100-1333-013	Pre-amp Board Assy.	
2	100-1349-001	Driver/Power Board Assy.	
1	100-1333-013	Tone Control Board Assy.	