SERVICE MANUAL

PARTS LIST

PS-200C
PS-120M
MODEL PS-200M

AKAI

ALSO APPLICABLE TO BLACK PANEL MODEL

PS-200C

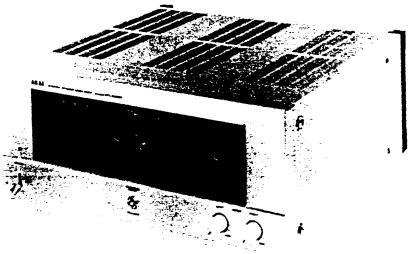

PS-120M

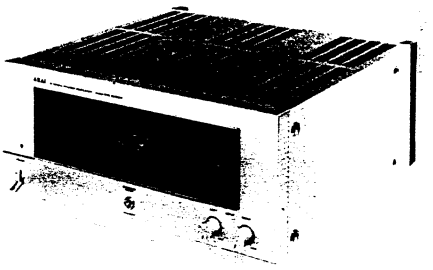

PS-200M

STEREO PRE-AMPLIFIER
and
STEREO POWER AMPLIFIERS

MODEL PS-200C PS-120M PS-200M

SECTION 1 SERVICE MANUAL 3
SECTION 2 PARTS LIST 57
SECTION 3 SCHEMATIC DIAGRAM 87

SECTION 1

SERVICE MANUAL

TABLE OF CONTENTS

I. TECHNICAL DATA 4
1. MODEL PS-200C 4
2. MODEL PS-120M 5
3. MODEL PS-200M 5
II. DISMANTLING OF UNIT 6
1. MODEL PS-200C 6
2. MODEL PS-120M (and PS-200M) 7
III. CONTROLS 8
1. MODEL PS-200C 8
2. MODEL PS-120M (and PS-200M) 9
IV. PRINCIPAL PARTS LOCATION 10
1. MODEL PS-200C 10
2. MODEL PS-120M 11
3. MODEL PS-200M 12
V. CIRCUIT OPERATION 13
1. MODEL PS-200C 13
2. MODEL PS-120M (and PS-200M) 15
VI. LEVEL DIAGRAM 21
1. MODEL PS-200C 21
2. MODEL PS-120M (and PS-200M) 21
VII. AMPLIFIER ADJUSTMENT 22
1. MODEL PS-200C 22
2. MODEL PS-120M 23
3. MODEL PS-200M 26
VIII. CLASSIFICATION OF VARIOUS P.C BOARDS 28
1. P.C BOARD TITLES AND IDENTIFICATION NUMBERS 28
2. MODEL PS-200C COMPOSITION OF VARIOUS P.C BOARDS 30
3. MODEL PS-120M COMPOSITION OF VARIOUS P.C BOARDS 36
4. MODEL PS-200M COMPOSITION OF VARIOUS P.C BOARDS 43

For basic adjustments, measuring methods, and operating principles, refer to GENERAL TECHNICAL MANUAL.

I. TECHNICAL DATA

1. MODEL PS-200C

INPUT SENSITIVITY/IMPEDANCE/ SIGNAL TO NOISE RATIO (IHF "A")	
PHONO 1 (MM)	2.5 mV/47 kohms/88 dB
PHONO 2 (MM)	2.5 mV/33, 47, 100 kohms/88 dB
PHONO 3 (MC)	0.07 mV/10 ohms/72 dB
TUNER	150 mV/47 kohms/106 dB
AUX 1/2	150 mV/47 kohms/106 dB
TAPE PLAY 1/2	150 mV/47 kohms/106 dB
OUTPUT LEVEL/IMPEDANCE	
TAPE REC 1/2	150 mV/600 ohms
OUTPUT	1.5V/600 ohms
RATED LOAD IMPEDANCE	1 kohms
PHONO MAX. INPUT LEVEL (1 kHz)	
PHONO 1/2	450 mV
PHONO 3	10 mV
FREQUENCY RESPONSE	
TUNER/AUX 1 & 2/TAPE PLAY 1 & 2	0.8 Hz to 100 kHz ±1 dB
PHONO 1/2 (RIAA CURVE DEVIATION)	30 Hz to 15 kHz ±0.2 dB
PHONO 3 (RIAA CURVE DEVIATION)	30 Hz to 15 kHz ±0.2 dB
TOTAL HARMONIC DISTORTION (20 Hz to 20 kHz)	
TUNER/AUX 1 & 2/TAPE PLAY 1 & 2	0.005% at output 1V
(VOLUME MAX.)	0.002% at output 7V
	0.005% at output 15V
PHONO 1/2 (VOLUME MAX.)	0.005% at output 15V
(VOLUME −20 dB)	0.005% at output 1.5V
PHONO 3 (VOLUME MAX.)	0.005% at output 15V
(VOLUME −20 dB)	0.005% at output 1.5V
TONE CONTROL BASS	±9 dB at 100 Hz
TREBLE	±9 dB at 10 kHz
SUBSONIC FILTER	12 dB/oct. at 18 Hz
CHANNEL SEPARATION (AUX 1/2)	70 dB (Shorted Circuit)
POWER REQUIREMENTS	120V, 60 Hz for U.S.A. and Canada
	220V, 50 Hz for Europe except UK
	240V, 50 Hz for UK and Australia
	110V/220V/240V, 50/60 Hz internally switchable
DIMENSIONS	440(W) x 90(H) x 457(D)
WEIGHT	7.5 kg

2. MODEL PS-120M

RATED POWER OUTPUT	130 watts per channel, min. RMS, at 8 ohms from 20 Hz to 20 kHz with no more than 0.008% THD.
TOTAL HARMONIC DISTORTION	0.008% at rated power output
INTERMODULATION DISTORTION	0.008% at rated power output
SIGNAL TO NOISE RATIO (IHF "A")	115 dB
RESIDUAL NOISE (IHF "A"/8 OHMS)	0.2 mV
INPUT SENSITIVITY/IMPEDANCE	1V/47 kohms
DAMPING FACTOR (IHF)	350
REQUIRED LOAD IMPEDANCE	4 ohms to 16 ohms
FREQUENCY RESPONSE	DC to 100 kHz ±0.5 dB
SUBSONIC FILTER	12 dB/oct. at 18 Hz
POWER REQUIREMENTS	120V, 60 Hz for U.S.A. and Canada
	220V, 50 Hz for Europe except UK
	240V, 50 Hz for UK and Australia
	110/220/240V, 50/60 Hz internally switchable
DIMENSIONS	44(W) x 198(H) x 459(D) mm
WEIGHT	30 kg

3. MODEL PS-200M

RATED POWER OUTPUT	220 watts per channel, min. RMS, at 8 ohms from 20 Hz to 20 kHz with no more than 0.008% THD.
TOTAL HARMONIC DISTORTION	0.008% at rated power output
INTERMODULATION DISTORTION	0.008% at rated power output
SIGNAL TO NOISE RATIO (IHF "A")	115 dB
RESIDUAL NOISE (IHF "A"/8 OHMS)	0.2 mV
INPUT SENSITIVITY/IMPEDANCE	1V/47 mV
DAMPING FACTOR (IHF)	350
REQUIRED LOAD IMPEDANCE	4 ohms to 16 ohms
FREQUENCY RESPONSE	DC to 100 kHz ±0.2 dB
SUBSONIC FILTER	12 dB/oct. at 18 Hz
POWER REQUIREMENTS	120V, 60 Hz for U.S.A. and Canada
	220V, 50 Hz for Europe except UK
	240V, 50 Hz for UK and Australia
	110/220/240V, 50/60 Hz internally switchable for other countries.
DIMENSIONS	440(W) x 198(H) x 459(D) mm
WEIGHT	30 kg

*** For improvement purposes, specifications and design are subject to change without notice.**

II. DISMANTLING OF UNIT

1. MODEL PS-200C

In case of trouble, etc. necessitating dismantling, please dismantle in the order shown in the photographs. Reassemble in reverse order.

1

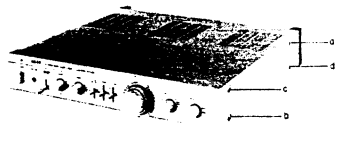

2

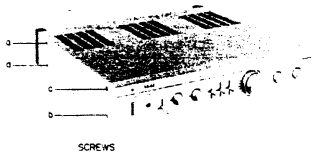

3

4

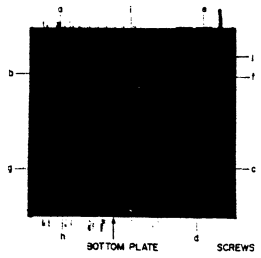

5

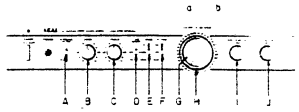

6

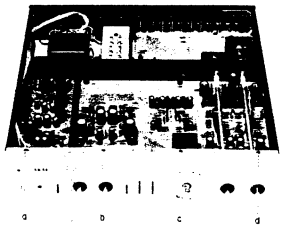

7

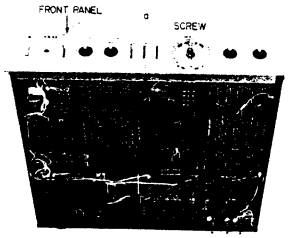

8

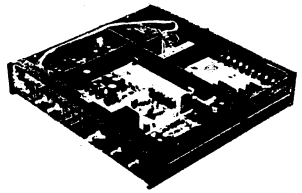

2. MODEL PS-120M (and PS-200M)

1

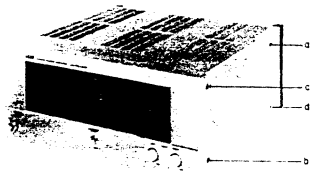

2

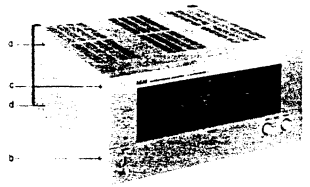

3

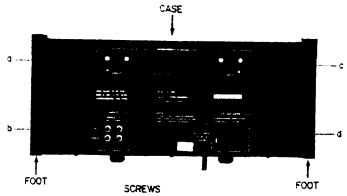

4

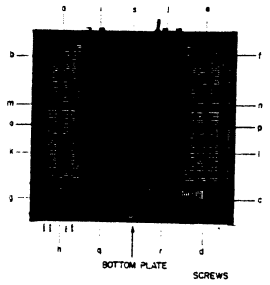

5

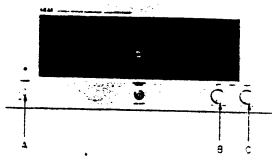

6

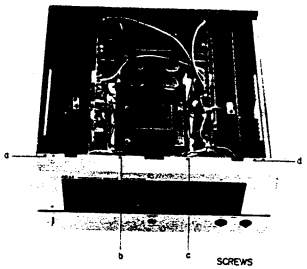

7

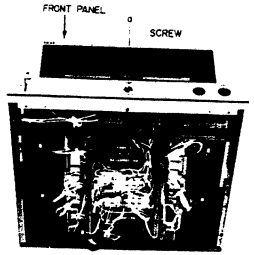

8

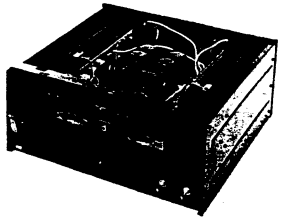

III. CONTROLS

1. MODEL PS-200C

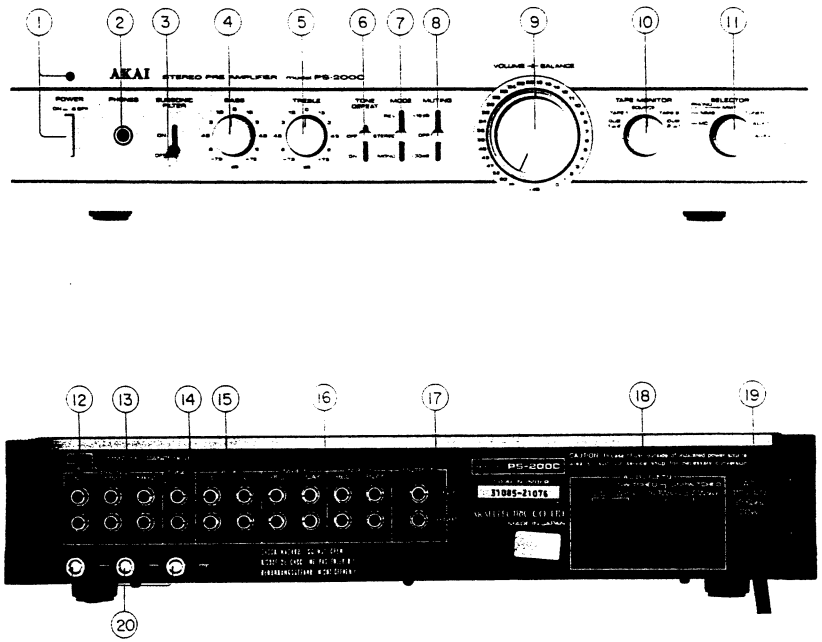

Fig. 1 Controls (PS-200C)

1. POWER SWITCH AND INDICATOR
2. HEADPHONE JACK
3. SUBSONIC FILTER
4. BASS TONE CONTROL
5. TREBLE TONE CONTROL
6. TONE SWITCH
7. MODE SWITCH
8. MUTING SWITCH
9. VOLUME AND BALANCE CONTROLS
10. TAPE MONITOR SWITCH
11. INPUT SELECTOR
12. CARTRIDGE IMPEDANCE SWITCH (MM2 Only)
13. PHONO TERMINALS
14. TUNER TERMINALS
15. AUX TERMINALS (2 set supplied)
16. TAPE 1 AND TAPE 2 SYSTEM REC/P.B TERMINALS
17. OUTPUT
18. EXTRA AC OUTLETS (Some models are not equipped with this facility)
19. AC POWER CORD (Some models equipped with AC inlet)
20. GROUND TERMINALS FOR PHONO

2. MODEL PS-120M (and PS-200M)

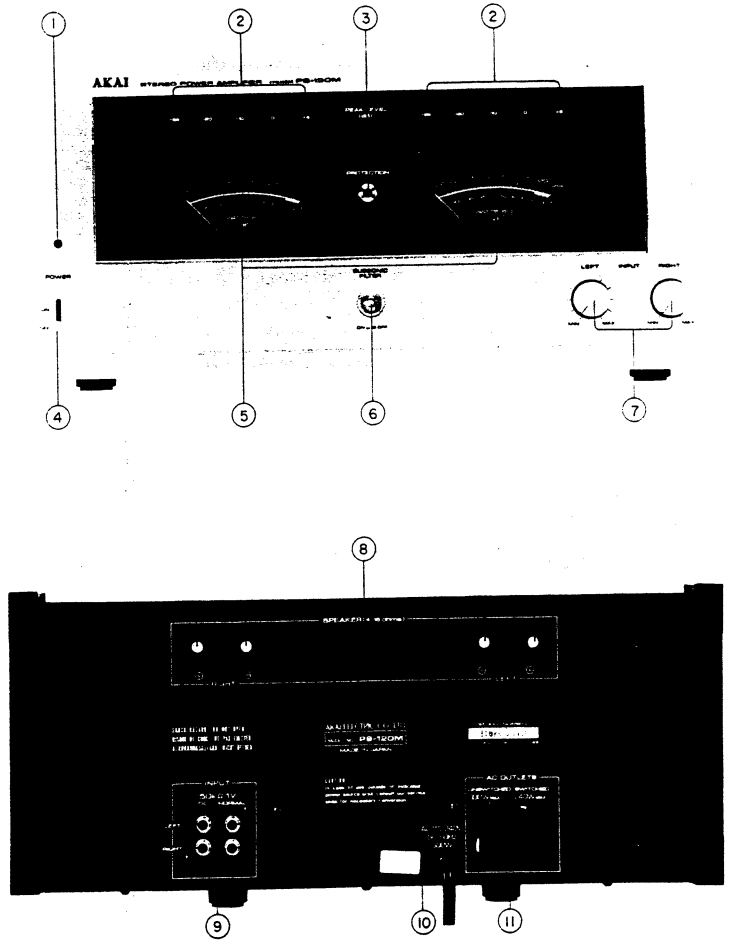

Fig. 2 Controls (PS-120M)

1. POWER INDICATOR
2. PEAK LEVEL LEDS (Light Emitting Diodes)
3. PROTECTION INDICATOR
4. POWER SWITCH
5. LEFT AND RIGHT CHANNEL PEAK LEVEL METERS
6. SUBSONIC FILTER
7. LEFT AND RIGHT INPUT LEVEL CONTROLS
8. SPEAKER SYSTEM TERMINALS
9. INPUT JACKS
10. POWER CORD
    (Some models have power cord inlets instead)
11. AC OUTLETS
    (Some models are not equipped with this facility)

IV. PRINCIPAL PARTS LOCATION

1. MODEL PS-200C

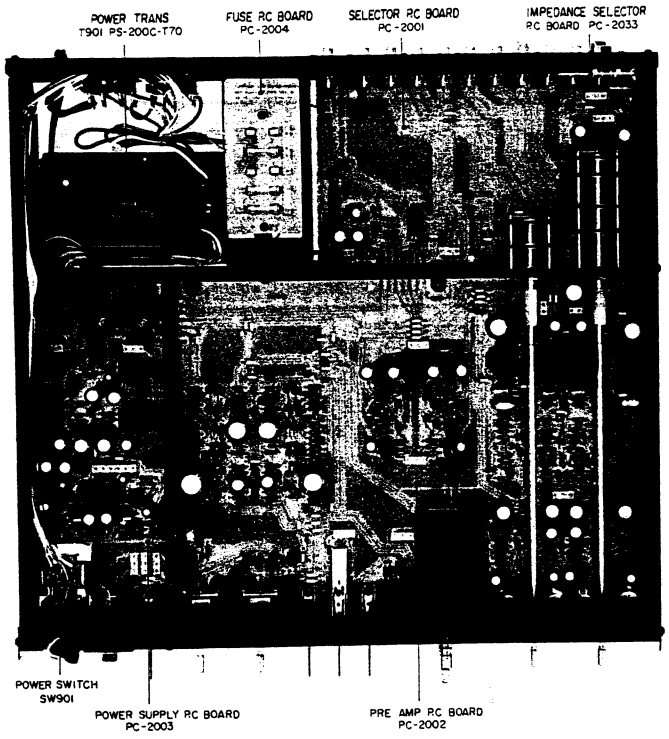

Fig. 3 Top View

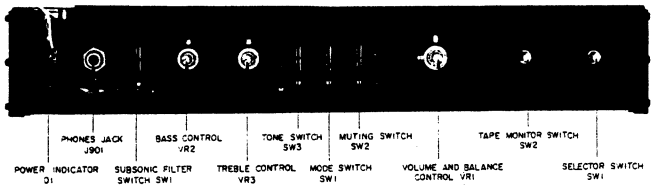

Fig. 4 Front View

2. MODEL PS-120M

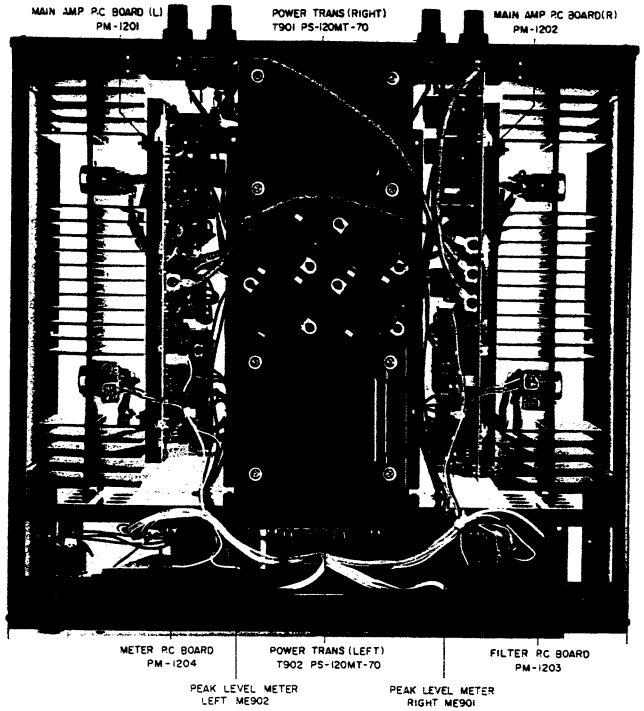

Fig. 5 Top View

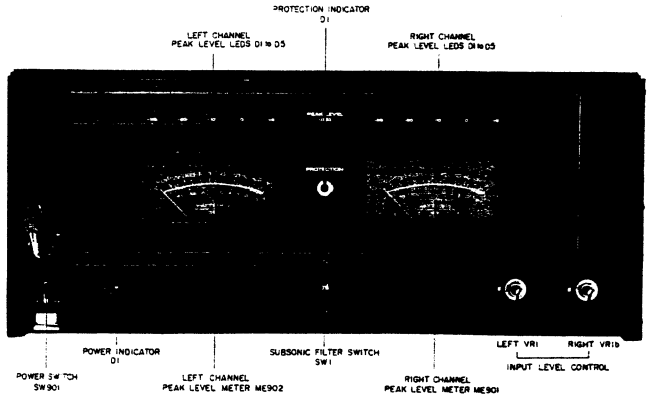

Fig. 6 Front View

3. MODEL PS-200M

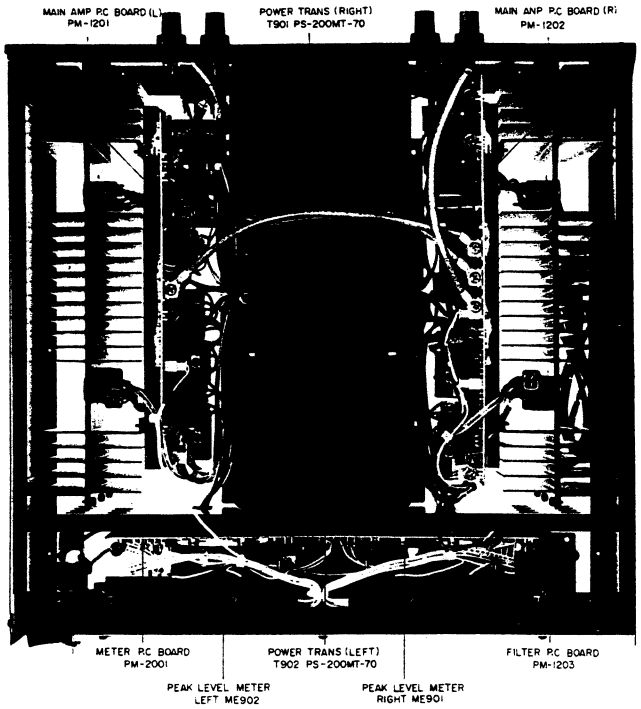

Fig. 7 Top View

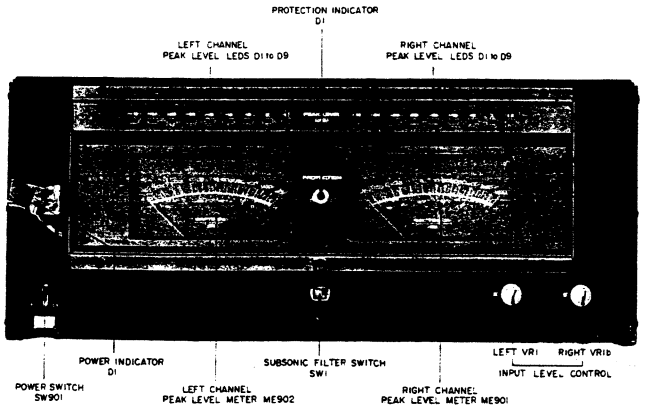

Fig. 8 Front View

V. CIRCUIT OPERATION

1. MODEL PS-200C

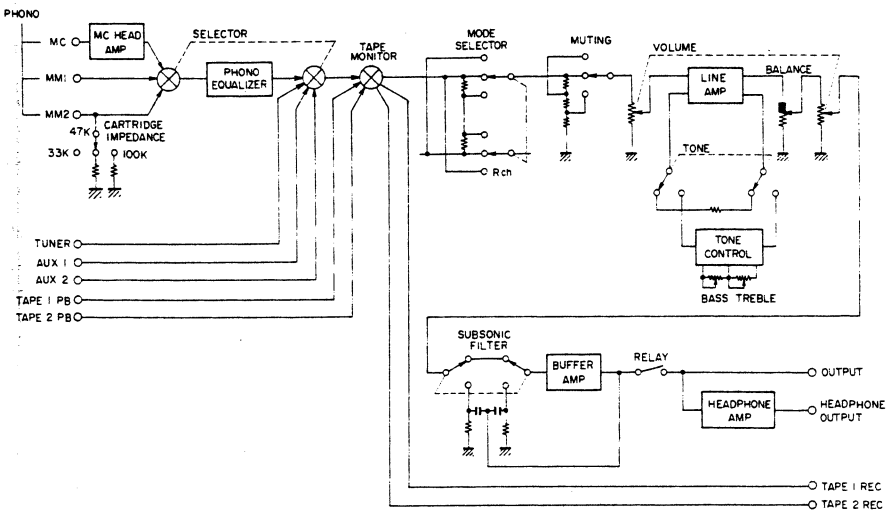

Fig. 9 Block Diagram (L Channel Only)

1) MC Head Amp

MC PHONO input's reference input is a low 0.07 mV. Therefore, a gain of approximately 30 dB at 1 kHz is obtained from the Head Amp to make the Equalizer Amp input equal to the MM type input.

The circuit is made up of high h_{fe}, low noise transistors connected in parallel to obtain high gain in the first stage. The pure complimentary push-pull last stage uses transistors with good linearity.

The dynamic range of the Head Amp deserves attention. The Head Amp is a flat amp with no RIAA characteristics, unlike the Equalizer Amp. The output of the cartridge increases with frequency with 1 kHz as reference. For this reason, even if sufficient dynamic range is obtained in the low and mid frequencies, there may be clipping in the high frequency. It is therefore necessary that the Head Amp does not saturate at the level at least where clipping occurs in the Equalizer Amp. The maximum allowable input voltage of this model is 10 mV at 1 kHz.

2) Equalizer Amp

The circuit is composed of a differential amplifier with cascade connected low noise one-chip dual FET in the first stage. Also, by using a constant current power source as a common source, CMRR (Common Mode Rejection Ratio) is improved. Distortion is also circumscribed by the differential amplifier in the next stage. The last stage is a Darlington connected pure complimentary push-pull circuit.

The NFB type equalizer features a stable frequency response and receives very little influence from heat, etc. By using a high precision part for the equalizer element, RIAA deviation is held within ±0.2 dB from the standard value with frequency response range of 30~15 kHz for this model.

The circuit operation of the differential amplifier in the first stage is described below.

The circuit is shown in Fig. 10. TR1a is connected in series to TR2 and TR1b is connected in series to TR3. Also a constant voltage is applied to the common gate of TR2 and TR3 from the resistance

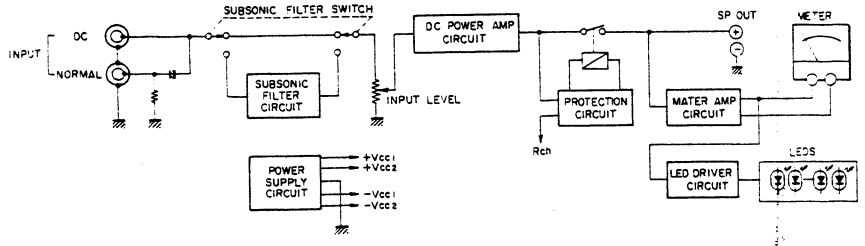

Fig. 11 Block Diagram

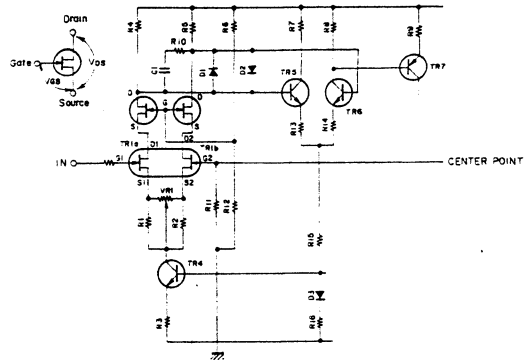

Fig. 10 Input Circuit of The Differential Amplifier

1) Input Circuit

These models are equipped with two terminals, DC and NORMAL, for input. By using the "DC" input, they become DC amplifiers without input coupling condenser. By using the "NORMAL" input, the coupling condenser cuts off the DC part. Also when the Subsonic Filter Switch is turned ON, the low range of 18 Hz or less is reduced by 12 dB/oct.

2) DC Power Amplifier Circuit

The signal from the input circuit passes the Input Level Control and enters the DC amplifier system's Power Amplifier Input. To explain what is meant by the DC amplifier system:

Condensers are used in circuits to obtain certain characteristics for DC operation, AC gain, and impedance when making an amplifier. However, condenser reactance increases in reverse proportion to the signal frequency and ultra low signals cannot be handled in AC. In circuit using many condensers, condenser reactance can be thought of as 0 in the midrange signals but in the ultra low range, condenser reactance is thought of as unlimited. When the midrange and the ultra low range equivalent circuits are compared; the gain, input and output impedances at each stage, and distortion, etc., changes widely.

In DC amplifiers, the condensers in the circuits, as above, are all removed. The same amplitude and impedance, etc., can be obtained in DC or AC in this design. In addition, the first stage differential transistor, FET pairing, and temperature balance, etc., becomes absolute necessity in the DC amplifiers. Next, although circuit-constructed, cascade connected differential amplifier used in PS-200C is used for the first stage. The voltage gain is obtained from the transistor differential amplifier in the next stage, and the input to the next stage is obtained from each collector.

The signals from the TR10 and TR11 collectors pass the pure complimentary push-pull TR19 and 20 and TR21 and 22, respectively. They are current amplified by the parallel push-pull power transistors and connected to SP OUT.

split of R6 and R12 regardless of the input signal.

The circuit is cascade connected in this way and a one-chip dual FET is used for TR1.

There circuits have advantages such as DC drift decrease, current noise decrease and improvement in frequency response characteristics.

Then the gate potential of TR1a increases, the impedance between TR1a drain and source decreases, and the drain current increases. Since TR1 is mode up of dual FET differential amplifier, TR1b drain current decreases proportionately to TR1a drain current increase. This causes TR1a drain potential to decrease and TR1b drain potential to increase. Since TR2 and TR3 gate potentials are constant, TR2 and TR3 V_{GS} vary due to changes in TR1a and TR1b drain potentials. TR2 drain current increases and TR3 drain current decreases due to this variance.

When the gate potential of TR1a decreases, the impedance between TR1a drain and source increases and the drain current decreases. TR1b drain current thereby increases proportionately to TR1a decrease. TR1a drain potential increases and TR1b drain potential decreases as a result. On the other hand TR2 V_{GS} decreases and TR3 V_{GS} increases to increase the TR2 drain potential by TR2 drain current decrease and to decrease the TR3 drain potential by the TR3 drain current increase.

In other words, TR1a gate signal input appears in reverse phase, equal voltage signal at R4 and R5 load resistors. This signal enters between the TR5 and TR6 bases as differential amplifier inputs of those two. By this, the output between the two drains in the first stage becomes a push-pull operation, and the distortion is minimized.

Since the circuit structure is two differential amplifiers used together, total CMRR is a product of the first stage CMRR and the second stage CMRR.

Even if there is an increase in the drain current, or an in-phase input due to noise, etc., any collector potential change is held down to result in a stable center potential and a decreased DC drift.

The output from the second stage differential amplifier is an unbalanced type taken out only from the TR6 collector. It is phase inverted in the next stage and pulls out the equalizer amplifier output signal as a push-pull circuit.

3) Line Amplifier

This circuit is almost exactly the same circuit-constructed flat amplifier as the equalizer amplifier without the NFB equalizer circuit. By equipping interlocking volumes on the input and the output sides, S/N ratio is improved when the volume is turned low.

4) Output Circuit

The output from the line amplifier passes the balance control, volume control, subsonic filter switch and is supplied to the buffer amplifier.

The buffer amplifier is an impedance conversion circuit used to prevent crossing between the circuit. Consequently, it requires high input impedance, low output impedance, no distortion, wide dynamic range, flat frequency response characteristics and low noise, etc. These are fulfilled in this model by using the pure complimentary SEPP type emitter follower circuit.

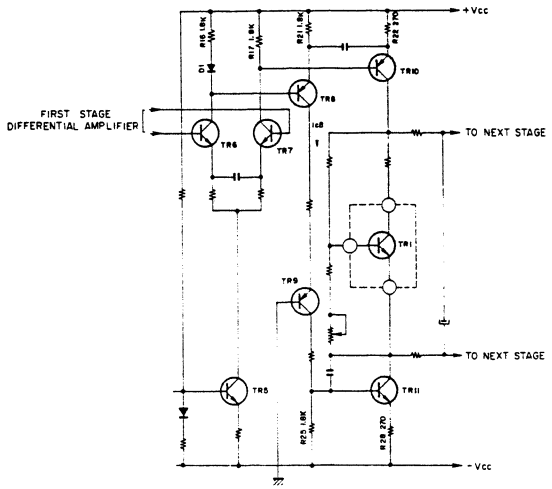

Fig. 12 Pre Driver Circuit

3) Pre Driver Circuit (Refer to Fig. 12)

The negative phase signals from the first stage differential amplifier (refer to PS-200C circuit explanation) enter the bases of TR6 and TR7 and the negative phase outputs from each collector become base inputs to the transistors of the next stage.

Although the signal from the TR7 collector becomes the base input of TR10, the signal from the TR6 collector must become TR11 base input to have the push-pull circuitry. Voltage between two sides of R17 (1.8 k) is supplied to TR10 base bias. TR8 is biased by voltage between two sides of R16 (1.8 k) + D1 and is supplied with IC8. And since V_{BE} of TR8 is approximately the same voltage as the D1 voltage drop, R21 (1.8 k) is supplied with the same voltage as the voltage between two sides of R16 = R17 (1.8 k).

This IC8 passes the cascade connected TR9 and flows to R25 (1.8 k).

Since R21 and R25 resistor values are equal, TR11 base is supplied with an equal potential bias as the TR10 base. As explained above, TR7 collector signal enters the TR10 base, TR6 collector signal appears in the voltage between two sides of R25 as a change in IC8 and enters TR11 base after which it is passed to the next stage by the push-pull circuitry.

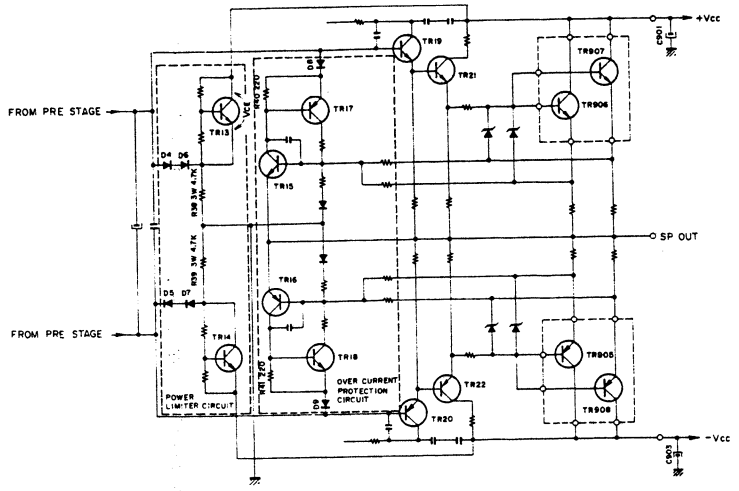

Fig. 13

4) Over Current Protection Circuit (Refer to Fig. 13)

When the speaker terminal of the power amplifier is shortcircuited or when the load impedance equivalently becomes too low due to too many speaker connections, the output stage transistor breaks down because of excessive power consumption by the transistors or of excess current. The circuit shown in Fig. 13 composed of TR15 and 17 and TR16 and 18 prevents this damage. TR15 and 17 circuit operates for excessive + signal current and TR16 and 18 operate for excessive – signal.

The case when there is a current overflow of + signal will be explained here. Ordinarily, TR15 base potential and the emitter potential are almost equal and TR15 is OFF. When the load RL becomes lower than the power amplifier's specified load or is short-circuited, excess current flows to the output stage transistor. This causes the base potential of TR15 to become greater than the emitter potential and TR15 turns ON.

When this happens, the signal to TR19 passes D8 and R40 and is dropped to the center (node) point. The output stage transistor, therefore, stops receiving the signal and the excess current does not flow.

Also when TR15 is turned ON, TR17 base potential is decreased to turn on TR17. TR15 base potential is thereby further increased to make the operation fullproof. Also when TR15 is turned ON, relay RL1 (see Fig. 14) turns OFF and the power amplifier output is disconnected from the speaker.

TR16 and 18 operate in the same way for excess signal current to protect the output stage transistor.

5) Power Limiter Circuit (Refer to Fig. 13)

This circuit is to protect the output stage transistor at excessive input. When the input signal voltage to TR19 and TR20 exceeds a certain point, it is limited and prevents excessive input to the output stage transistor. Only the case of positive signal input will be explained here.

There is very little voltage amplification because TR19, TR21, and the output stage transistor are emitter followers at current amplification. In other words, the TR19 base is supplied with the same voltage as speaker output voltage. So the maximum voltage to appear at the output is $+V_{CC}$. Signals with voltage of no less than approximately 2.1V or 3 diode voltage drops less than this $+V_{CC}$ are limited by TR13, D4, and D6.

To explain the circuit operation, first, $+V_{CC}$ is added to the TR13 collector. The voltage between TR13 collector and emitter has a potential of 5 diode voltage drops or approximately 3.5V according to the design, and a voltage 3.5V lower than C901 positive voltage appears at the emitter.

Next, taking a look at the signal voltage, we find that when the value after subtracting the voltage drops of D4 and D6 (approximately 0.7V x 2) is greater than TR13 emitter potential, the signal passes R38 and is grounded to be limited. By the above operation, when there is a voltage no less than the value approximately 2.1V (Voltage drops of D4 and D6 subtracted from TR13 V_{CE}) less than $+V_{CC}$, the signal passes D4→D6→R38 and is grounded to limit the output.

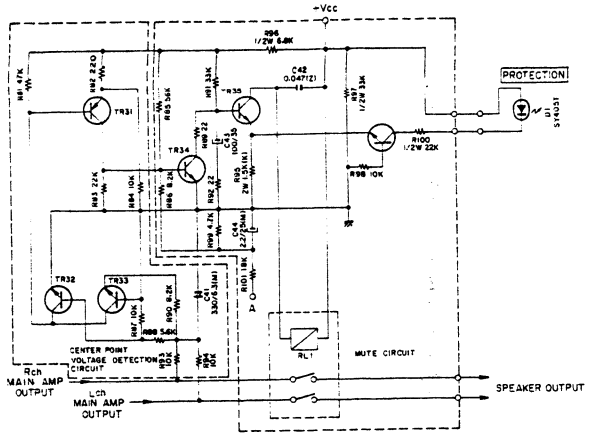

Fig. 14

6) Mute Circuit (Refer to Fig. 14)

When the power of the amplifier is turned on or off, pop and distortion noise generate to damage the speakers or produce unpleasant sound. The mute circuit of Fig. 14 prevents these.

When the power is ON, point A is supplied with a diode rectified negative pulse current and charges C44 through R101. While C44 is being charged, TR34 base is supplied with the potential from $+V_{CC}$ and turns ON. On the otherhand, TR35 base potential decreases to turn OFF. At this condition since TR35 collector current does not flow to R95, TR36 base potential becomes higher than the emitter potential and TR36 is turned ON. When TR36 is turned ON, collector current flows through R100 and R95 and the PROTECTION INDICATOR D1 illuminates. When C44 is finished being charged, TR34 base becomes negative potential and TR34 turns off. Then the base current of TR35 turns on TR35 after charging the time constant circuit. Relay RL1 is driven by the TR35 collector current and the main amplifier output is connected to the speaker output. In this conditions, TR36 emitter potential becomes higher than the base potential so that TR36 turns OFF and the Protection Indicator D1 lights off.

When the power is OFF, point A is not supplied with the pulse current.

The C44 charge, therefore, discharges through R99 and raises the base potential of TR34 to turn ON TR34. TR35 base potential then decreases to turn off TR35 and the relay RL1 also turns off. When the TR35 collector current stops flowing, TR36 base potential becomes higher than the emitter potential and turns ON to light the PROTECTION INDICATOR D1. However, since the potential of $+V_{CC}$ gradually decreases, TR36 base potential decreases to turn OFF and the PROTECTION INDICATOR D1 also turns off.

7) Center (node) Point Voltage Detection Circuit (Refer to Fig. 14)

When there is DC potential at the power amplifier's speaker output terminal, the DC will flow to the speaker in the case of OCL circuitry and damage the speakers. For this reason, when there is a DC potential, a circuit is necessary to detect the potential to turn off the mute circuit relay RL1 and cut off the speaker from the power amplifier output. This circuit is called a center (node) point voltage detection circuit and is shown in Fig. 14.

Ordinarily the center (node) point is 0V and TR32 and 33 are OFF. C41 is a non-pole condenser and is grounded that there is no effect from the AC signal. But when there is a positive DC potential at the center point, that potential positively charges C41 on the side opposite to the ground. Consequently, TR32 is base biased and is turned ON. TR31 base becomes ground potential and TR31 turns ON. When TR31 turns ON, TR34 base potential is increased, TR34 turns ON, and TR35 base potential decreases. When TR35 is turned OFF, relay RL1 turns OFF and the power amplifier output is disconnected from the speakers.

Next, if there is a negative DC potential at the center point, that potential negatively charges C41 on the opposite side to the ground and TR33 emitter potential becomes lower than the base potential to turn ON TR33. Accordingly, TR31 base becomes ground potential and relay RL1 turns off as mentioned earlier and the power amplifier is cut off from the speaker.

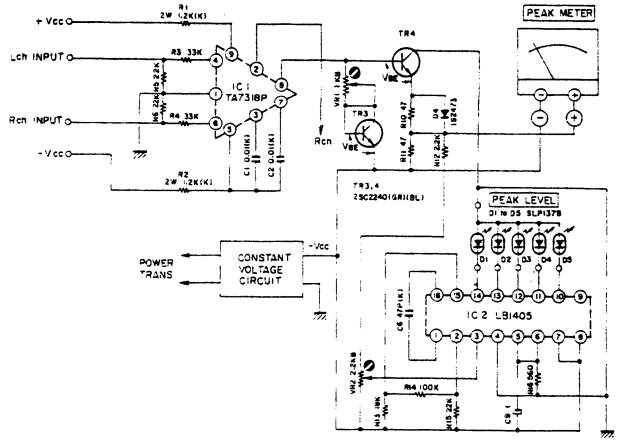

Fig. 15 Meter Amplifier and LED Drive Circuit

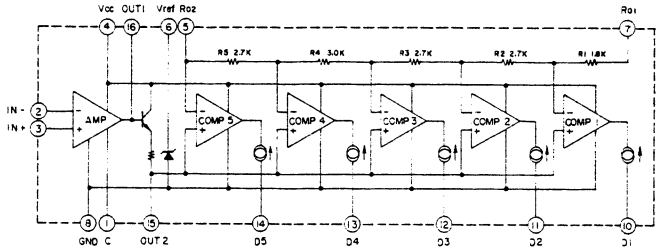

Fig. 16 LB1405 Block Diagram

8) Meter Amplifier and LED Drive Circuit (Refer to Fig. 15, 16)

The signal from the speaker output enters the input of Meter Amplifier IC1 and comes out of terminals 2 and 8 as output. The peak meter used in these models requires approximately 40 mA of electric current. Since the output current from IC1 is not enough, the output from IC1 is current amplified by the TR4 emitter follower circuit to drive the meter. Also because of the large current, constant voltage circuit, TR1 and TR2, supplies the current. TR3 equalizes TR4 V_{BE} and TR3 V_{BE} and equalizes V_{BE} changes due to base current changes for good linearity to the meter input.

D4 assists in obtaining good linearity of the meter itself. When the signal voltage increases to a certain point, D4 provides continuity to increase the meter drive current and compensates the linearity.

IC LB1405 is used for the LED drive. Fig. 16 shows the block diagram. The signal entering terminal 3 is amplified and is passed to each comparator. A resistance divided constant voltage for each level is supplied to one side of the comparators. The IC compares each input signal with this constant voltage and detects it to drive the LED of each level.

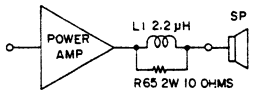

Fig. 17

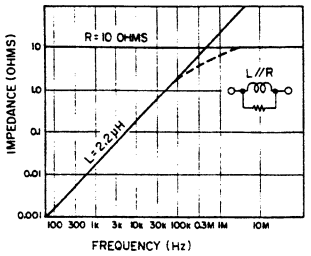

Fig. 18

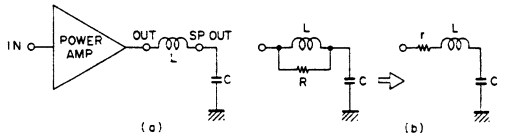

Fig. 19

9) L1 and R65 Operation (Refer to Fig. 17 to 19)

As shown in Fig. 17, most amplifiers have an inductance or a resistor between the output and the speaker. The inclusion has several advantages.

Considering the negative effect when L and R is inputted, we find that the power amplifier output impedance increases higher the frequency in the case of inductance. This negative effect is shown in Fig. 18. However, as can be seen in the figure, the effect of the inductance is merely 0.014 ohm at 1 kHz and 1.4 ohm even at 100 kHz, and is hardly a problem.

Considering the positive side, we find that the impedance seen from the load terminal becomes extremely low at high frequencies due to such factors as speaker cord capacitive components and L-C networks for speaker frequency divider. However, the load impedance seen from the power amplifier output can maintain a value above a certain level due to the effect from L and R added in series to the load terminal.

Also the addition of L and R serves as a buffer when the power amplifier begins high range oscillation as a result of poor grounding of the Pin jack or phase difference caused by capacitance load at the output stage, etc. When something with a capacitance component is connected to the load in this way, a series resonance circuit is constructed as in Fig. 19(a) and the load impedance becomes 0 at the resonance point. But because of the operation of R connected parallel to L, the resonance circuit is damped and looks as if a pure resistor has been added equivalently as in Fig. 19(b), and the load impedance does not become zero even at the resonance point.

VI. LEVEL DIAGRAM

1. MODEL PS-200C

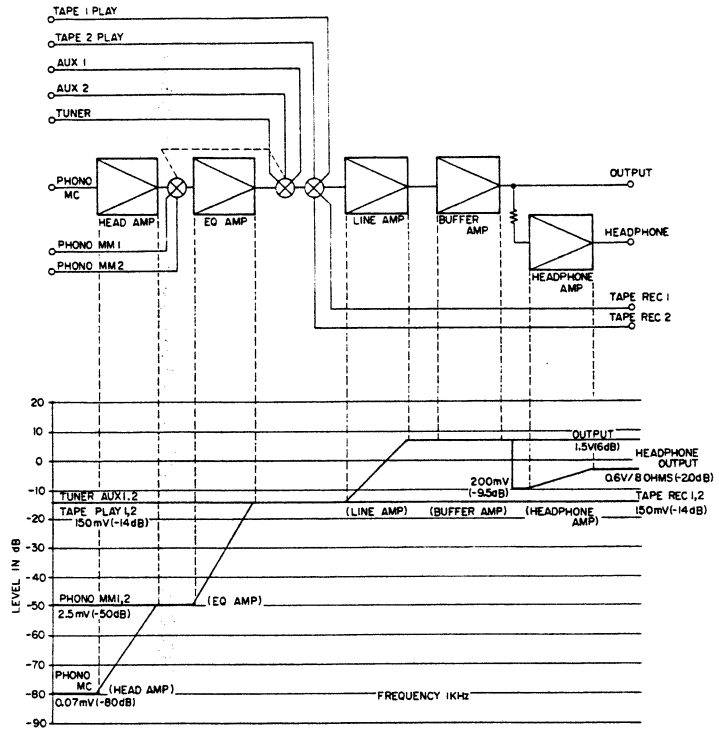

Fig. 20 Level Diagram PS-200M

2. MODEL PS-120M and PS-200M

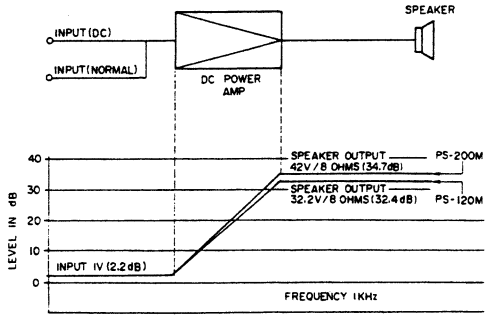

Fig. 21 Level Diagram PS-120M and PS-200M

VII. AMPLIFIER ADJUSTMENT

1. MODEL PS-200C (Refer to Fig. 22)

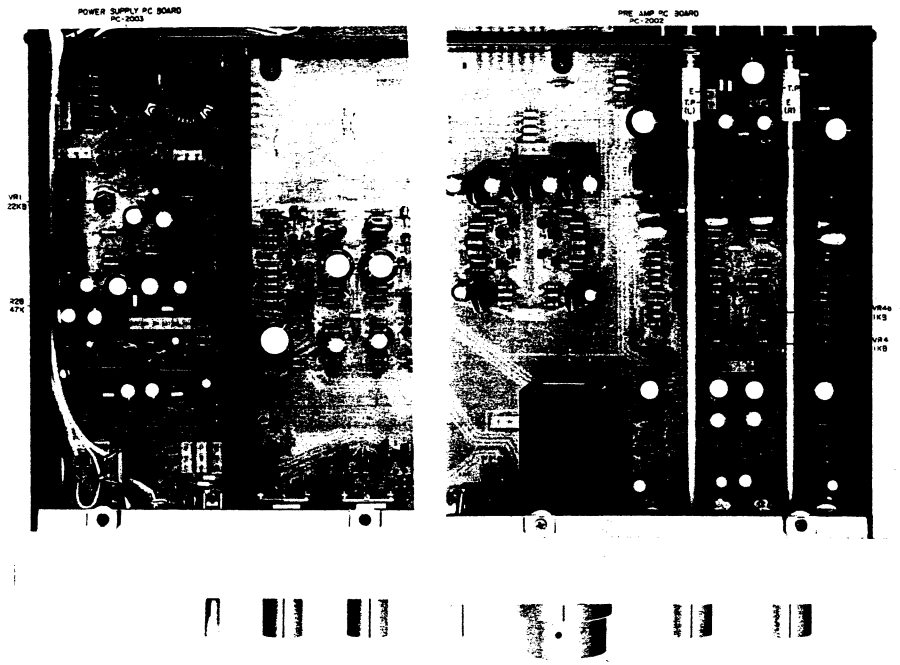

Fig. 22 Adjustment Point

Step	Adjustment Item	Measuring Instrument Connection	Adjustment Point	Result	Remarks
1	DC Power Supply Voltage Adjustment	DC Voltmeter or Digital Voltmeter between R28 ⊕ and Ground	VR1 22 kB (Power Supply P.C Board)	42.0 V	
2	L ch Center Off-set Voltage Adjustment	DC Voltmeter or Digital Voltmeter between T.P (L) and Ground	VR4 1 kB (Pre Amp P.C Board)	0 ± 0.5 V	OK if 0 ± 0.5 V at the beginning of adjustment
3	R ch Center Off-set Voltage Adjustment	DC Voltmeter or Digital Voltmeter between T.P (R) and Ground	VR4b 1 kB (Pre Amp P.C Board)	0 ± 0.5 V	

Chart-1

2. MODEL PS-120M (Refer to Figs. 23, 24)

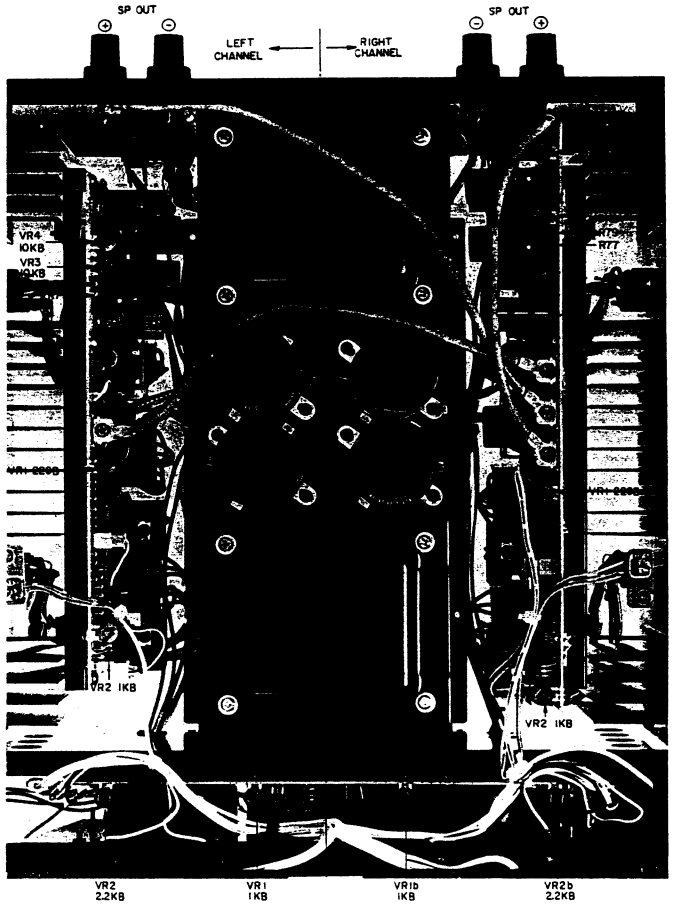

Fig. 23 Adjustment Point

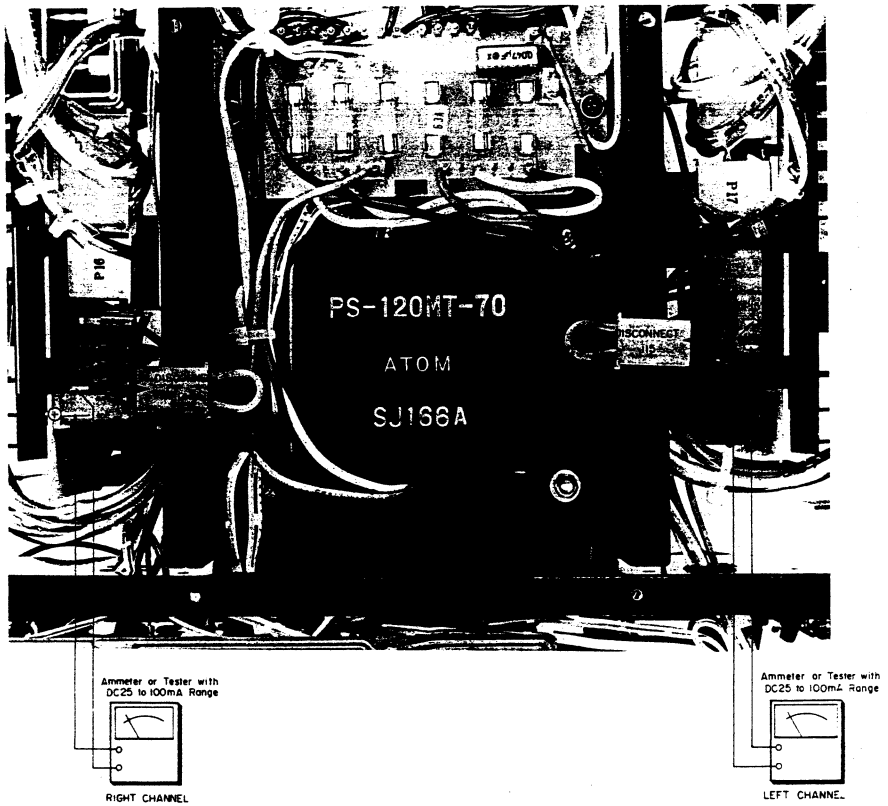

Fig. 24 Idling Current Adjustment

Step	Adjustment Item	Measuring Instrument Connection	Adjustment Point	Result	Remarks
1	L ch −DC Power Supply Voltage Adjustment	DC Voltmeter or Digital Voltmeter between R79 and Ground	VR4 10 kB (Main Amp P.C Board (L))	−62.0 V	Refer to NOTE 2.
2	L ch +DC Power Supply Voltage Adjustment	DC Voltmeter or Digital Voltmeter between R77 and Ground	VR3 10 kB (Main Amp P.C Board (L))	+62.0 V	Refer to NOTE 2.
3	L ch Center Off-set Voltage Adjustment	DC Voltmeter or Digital Voltmeter between L ch SP OUT ⊕ and ⊖	VR1 220 B (Main Amp P.C Board (L))	0 ± 0.5 V	OK if 0 ± 0.5 mV at the beginning of adjustment
4	L ch Idling Current Adjustment	DC Ammeter or Tester between P15 ⊕ and ⊖	VR2 1 kB (Main Amp P.C Board (L))	20 mA	Refer to Fig. 7 and NOTE 3.
5	R ch −DC Power Supply Voltage Adjustment	DC Voltmeter or Digital Voltmeter between R79 and Ground	VR4 10 kB (Main Amp P.C Board (R))	−62.0 V	Refer to NOTE 2.
6	R ch +DC Power Supply Voltage Adjustment	DC Voltmeter or Digital Voltmeter between R77 and Ground	VR3 10 kB (Main Amp P.C Board (R))	+62.0 V	Refer to NOTE 2.
7	R ch Center Off-set Voltage Adjustment	DC Voltmeter or Digital Voltmeter between R ch SP OUT ⊕ and ⊖	VR1 220 B (Main Amp P.C Board (R))	0 ± 0.5 mV	OK if 0 ± 0.5 mV at the beginning of adjustment
8	R ch Idling Current Adjustment	DC Ammeter or Tester between P14 ⊕ and ⊖	VR2 1 kB (Main Amp P.C Board (R))	20 mA	Refer to Fig. 7 and NOTE 3.
9	L ch Meter Sensitivity Adjustment	AC Voltmeter between L ch SP OUT ⊕ and ⊖	VR1 1 kB (Meter P.C Board)	Meter indicates 120 W	Input 1 kHz sine wave & adjust the input level until the AC Voltmeter reads 31.0 V. Refer to NOTE 4.
10	L ch LED Sensitivity Adjustment	AC Voltmeter between L ch SP OUT ⊕ and ⊖	VR2 2.2 kB (Meter P.C Board)	Input 1 kHz sine wave, control the output level with the input level, and adjust VR2 so that 0 dB LED will go on at SP output of 31.0 V (120W) and off at 28.3 V (100W). Refer to NOTE 4.	
11	R ch Meter Sensitivity Adjustment	AC Voltmeter between R ch SP OUT ⊕ and ⊖	VR1b 1 kB (Meter P.C Board)	Meter indicates 120 W	Input 1 kHz sine wave & adjust the input level until the AC Voltmeter reads 31.0 V. Refer to NOTE 4.
12	R ch LED Sensitivity Adjustment	AC Voltmeter between R ch SP OUT ⊕ and ⊖	VR1b 2.2 kB (Meter P.C Board)	Input 1 kHz sine wave, control the output level with the input level, and adjust VR2 so that 0 dB LED will go on at SP output of 31.0 V (120W) and off at 28.3 V (100W). Refer to NOTE 4.	

Chart-2

NOTES: 1. Connect and disconnect a measuring equipment only after the power has turned off for several seconds.
2. When connecting the Voltmeter for Steps 1, 2, 5 and 6, do not shortcircuit positive and negative power sources.
3. When connecting the DC Ammeter for Steps 4 and 8, do not touch the angle fixing the P.C Board.
4. Do adjustments in steps 9 to 12 with the input in only one channel.

3. MODEL PS-200M (Refer to Figs. 23, 24)

Step	Adjustment Item	Measuring Instrument Connection	Adjustment Point	Result	Remarks
1	L ch –DC Power Supply Voltage Adjustment	DC Voltmeter or Digital Voltmeter between R79 and Ground	VR4 10 kB (Main Amp P.C Board (L))	–73.0 V	Refer to NOTE 2.
2	L ch +DC Power Supply Voltage Adjustment	DC Voltmeter or Digital Voltmeter between R77 and Ground	VR3 10 kB (Main Amp P.C Board (L))	+73.0 V	Refer to NOTE 2.
3	L ch Center Off-set Voltage Adjustment	DC Voltmeter or Digital Voltmeter between L ch SP OUT ⊕ and ⊖	VR1 1 kB (Main Amp P.C Board (L))	0 ± 0.5 mV	OK if 0 ± 0.5 mV at the beginning of adjustment
4	L ch Idling Current Adjustment	DC Ammeter or Tester between P15 ⊕ and ⊖	VR2 1 kB (Main Amp P.C Board (R))	20 mA	Refer to Fig. 7 and NOTE 3.
5	R ch –DC Power Supply Voltage Adjustment	DC Voltmeter or Digital Voltmeter between R79 and Ground	VR4 10 kB (Main Amp P.C Board (R))	–73.0 V	Refer to NOTE 2.
6	R ch +DC Power Supply Voltage Adjustment	DC Voltmeter or Digital Voltmeter between R77 and Ground	VR3 10 kB (Main Amp P.C Board (R))	+73.0 V	Refer to NOTE 2.
7	R ch Center Off-set Voltage Adjustment	DC Voltmeter or Digital Voltmeter between R ch SP OUT ⊕ and ⊖	VR1 220 B (Main Amp P.C Board (R))	0 ± 0.5 mV	OK if 0 ± 0.5 mV at the beginning of adjustment
8	R ch Idling Current Adjustment	DC Ammeter or Tester between P14 ⊕ and ⊖	VR2 1 kB (Main Amp P.C Board (R))	20 mV	Refer to Fig. 7 and NOTE 3.
9	L ch Meter Sensitivity Adjustment	AC Voltmeter between L ch SP OUT ⊕ and ⊖	VR1 1 kB (Meter P.C Board)	Meter indicates 200 W	Input 1 kHz sine wave & adjust the input level until the AC Voltmeter reads 40.0 V. Refer to NOTE 4.
10	L ch LED Sensitivity Adjustment	AC Voltmeter between L ch SP OUT ⊕ and ⊖	VR2 2.2 kB (Meter P.C Board)	Input 1 kHz sine wave, control the output level with the input level, and adjust VR2 so that 0 dB LED will go on at SP output of 40.0 V (200W) and off at 35.8 V (160W). Refer to NOTE 4.	
11	R ch Meter Sensitivity Adjustment	AC Voltmeter between R ch SP OUT ⊕ and ⊖	VR1b 1 kB (Meter P.C Board	Meter indicates 200 W	Input 1 kHz sine wave & adjust the input level until the AC Voltmeter reads 40.0 V. Refer to NOTE 4.

Step	Adjustment Item	Measuring Instrument Connection	Adjustment Point	Result	Remarks
12	R ch LED Sensitivity Adjustment	AC Voltmeter between R ch SP OUT ⊕ and ⊖	VR2b 2.2 kB (Meter P.C Board)	Input 1 kHz sine wave, control the output level with the input level, and adjust VR2 so that 0 dB LED will go on at SP output of 40.0 V (200 W) and off at 35.8V (160W). Refer to NOTE 4.	

Chart-3

NOTES: 1. Connect and disconnect a measuring equipment only after the power has turned off for several seconds.
2. When connecting the Voltmeter for Steps 1, 2, 5 and 6, do not shortcircuit positive and negative power sources.
3. When connecting the DC Ammeter for Steps 4 and 8, do not touch the angle fixing the P.C Board.
4. Do adjustments in steps 9 to 12 with the input in only one channel.

VIII. CLASSIFICATION OF VARIOUS P.C BOARDS

1. P.C BOARD TITLES AND IDENTIFICATION NUMBERS

1) Model PS-200C

P.C Board Title	P.C Board Number
Selector P.C Board	PC-2001
Pre Amp P.C Board (Old Type)	PC-2002
Pre Amp P.C Board (B) (New Type)	PC-2056
Power Supply P.C Board	PC-2003
Impedance Selector P.C Board	PC-2033
LED P.C Board (B)	PM-1252
Fuse P.C Board (U) (U/T)	PC-2004
Fuse P.C Board (C) (CSA, AAL)	PC-2034
Fuse P.C Board (E) (CEE, UK)	PC-2035

Chart-4

2) Model PS-120M

P.C Board Title	P.C Board Number
Main Amp P.C Board (L)	PM-1201
Main Amp P.C Board (R)	PM-1202
Filter P.C Board	PM-1203
Meter P.C Board	PM-1204
Temp Compensation P.C Board	PM-1249
LED P.C Board (A)	PM-1250
LED P.C Board (B)	PM-1252
Fuse P.C Board (U) (U/T)	PM-1205
Fuse P.C Board (C) (CSA, AAL)	PM-1248
Fuse P.C Board (E) (CEE, UK)	PM-1251
Relay Terminal P.C Board	PM-1247

Chart-5

3) Model PS-200M

P.C Board Title	P.C Board Number
Main Amp P.C Board (L)	PM-1201
Main Amp P.C Board (R)	PM-1202
Filter P.C Board	PM-1203
Meter P.C Board	PM-2001
Temp Compensation P.C Board	PM-1249
LED P.C Board (C)	PM-2016
LED P.C Board (B)	PM-1252
Fuse P.C Board (U) (U/T)	PM-2017
Fuse P.C Board (C) (CSA, (AAL)	PM-2018
Fuse P.C Board (E) (CEE, UK)	PM-2019
Relay Terminal P.C Board	PM-1247

Chart-6

2. MODEL PS-200C COMPOSITION OF VARIOUS P.C BOARDS

1) PRE AMP P.C BOARD PC-2002 (Old Type)

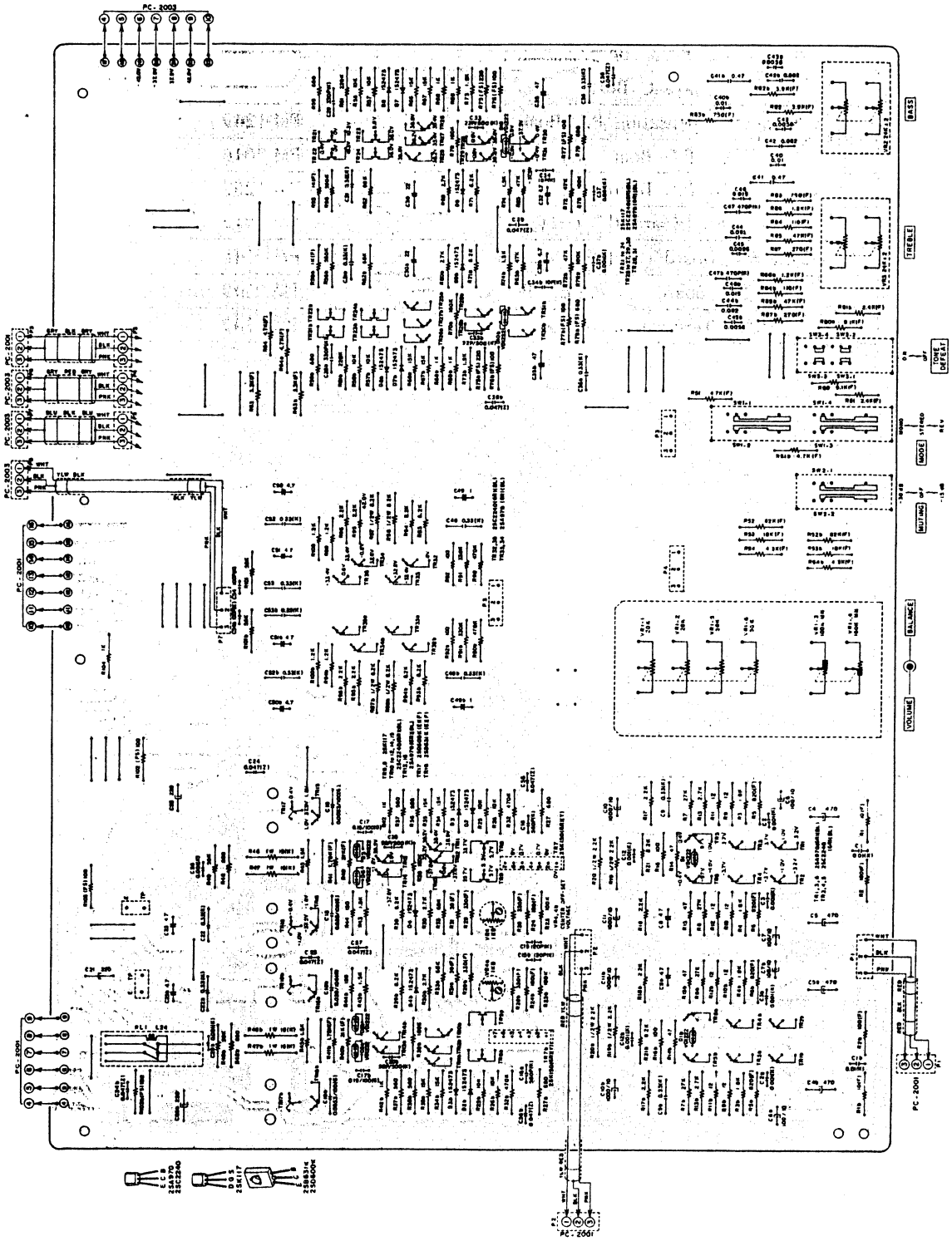

2) PRE AMP P.C BOARD (B) PC-2056 (New Type)

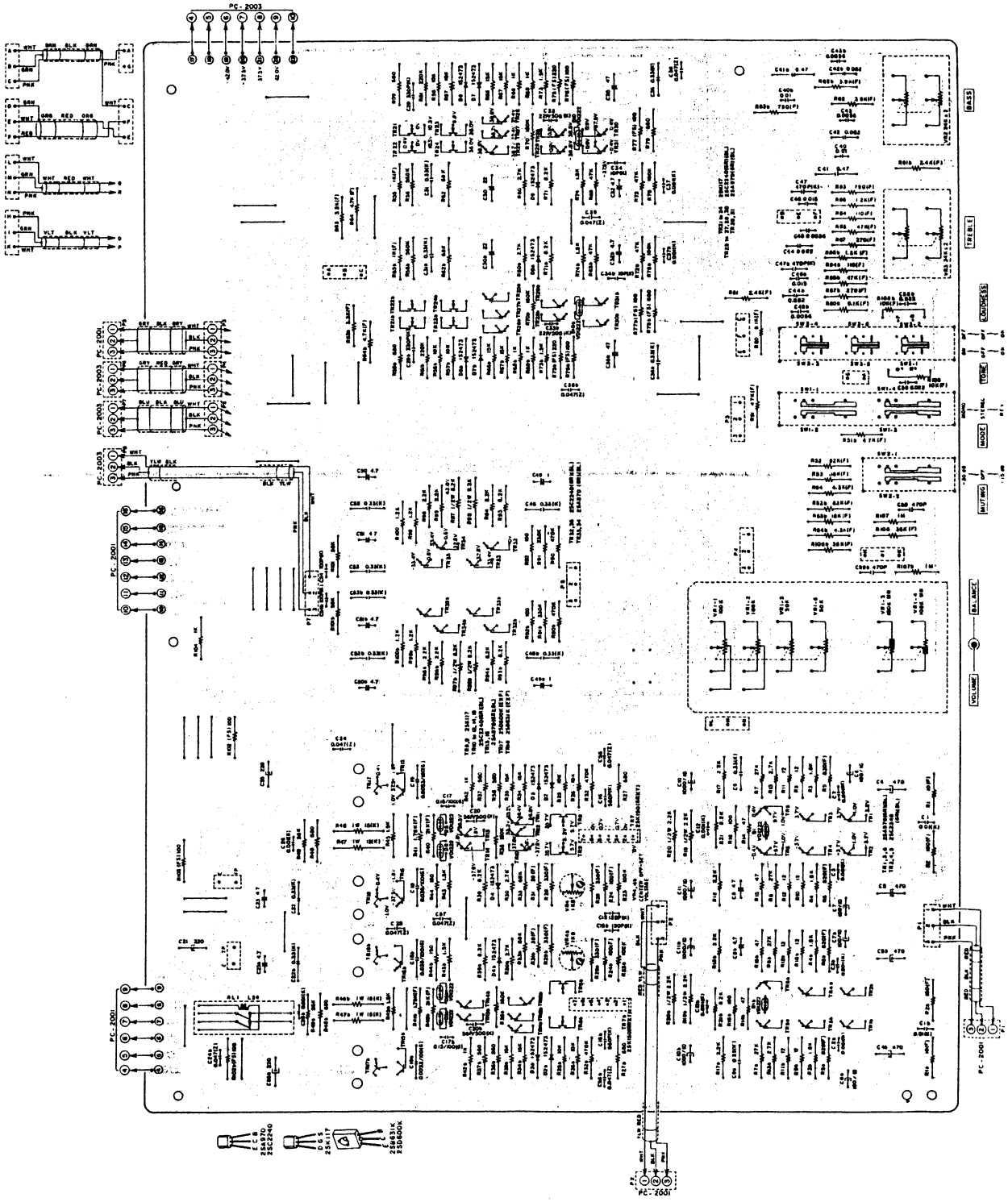

3) SELECTOR P.C BOARD PC-2001, IMPEDANCE SELECTOR P.C BOARD PC-2033 AND LED P.C BOARD (B) PM-1252

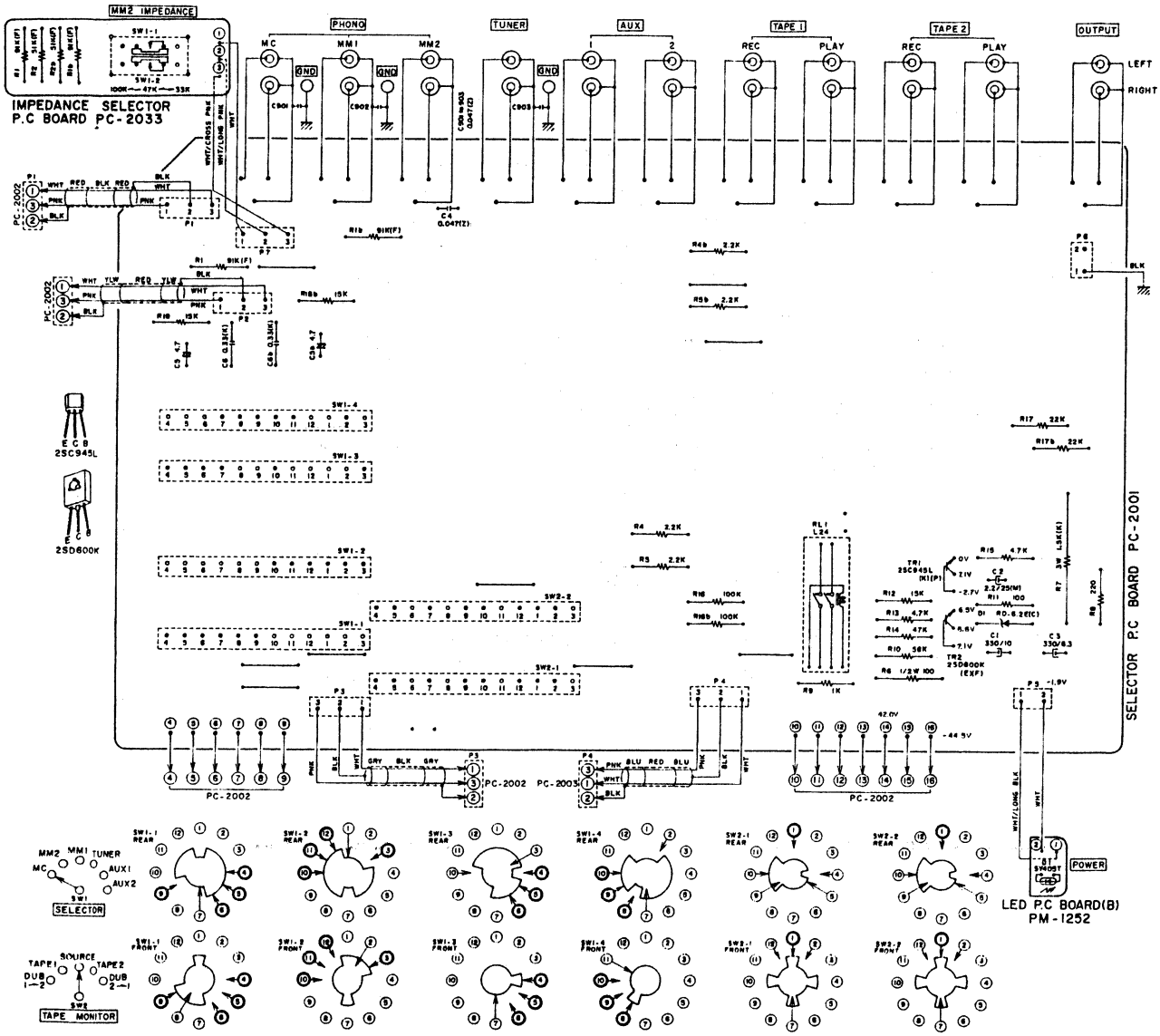

4) POWER SUPPLY P.C BOARD PC-2003

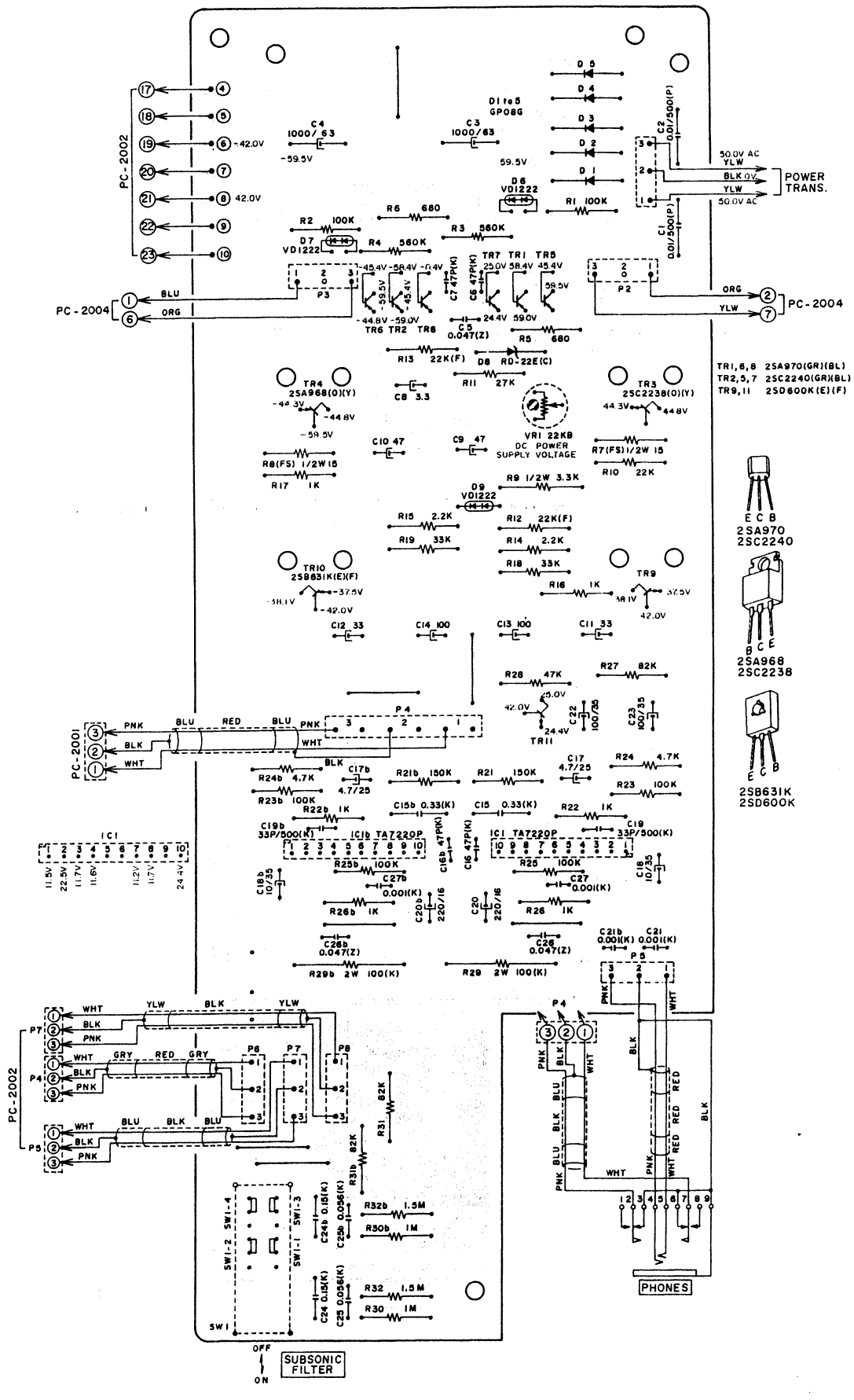

5) FUSE P.C BOARD (U) PC-2004 (U/T)

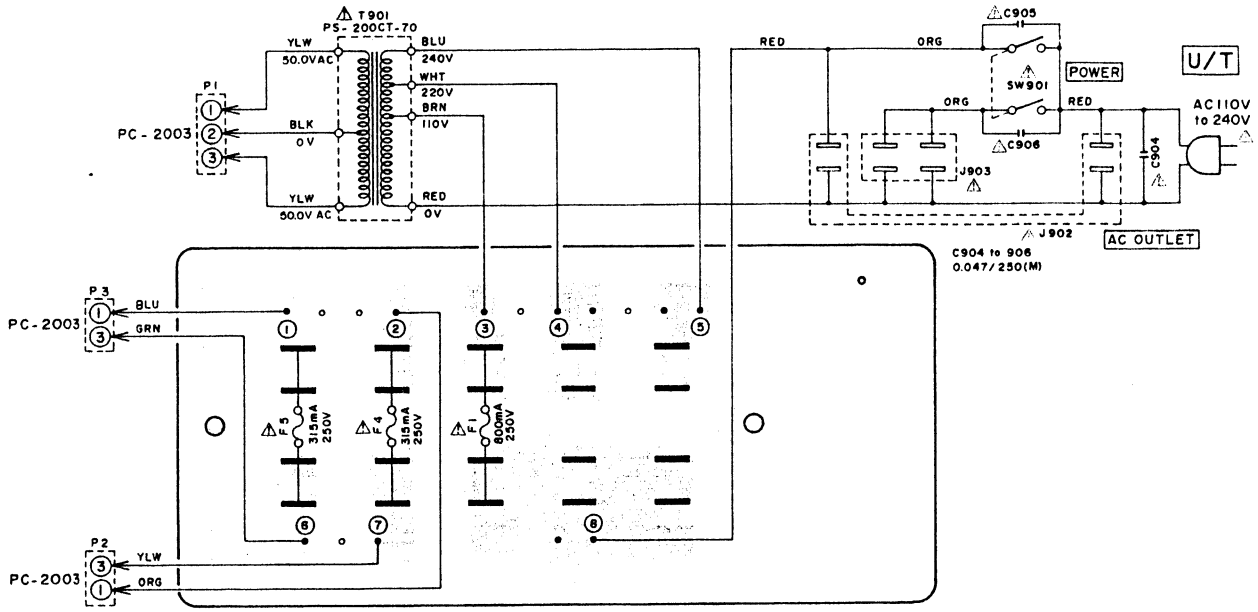

6) FUSE P.C BOARD (C) PC-2034 (CSA, AAL)

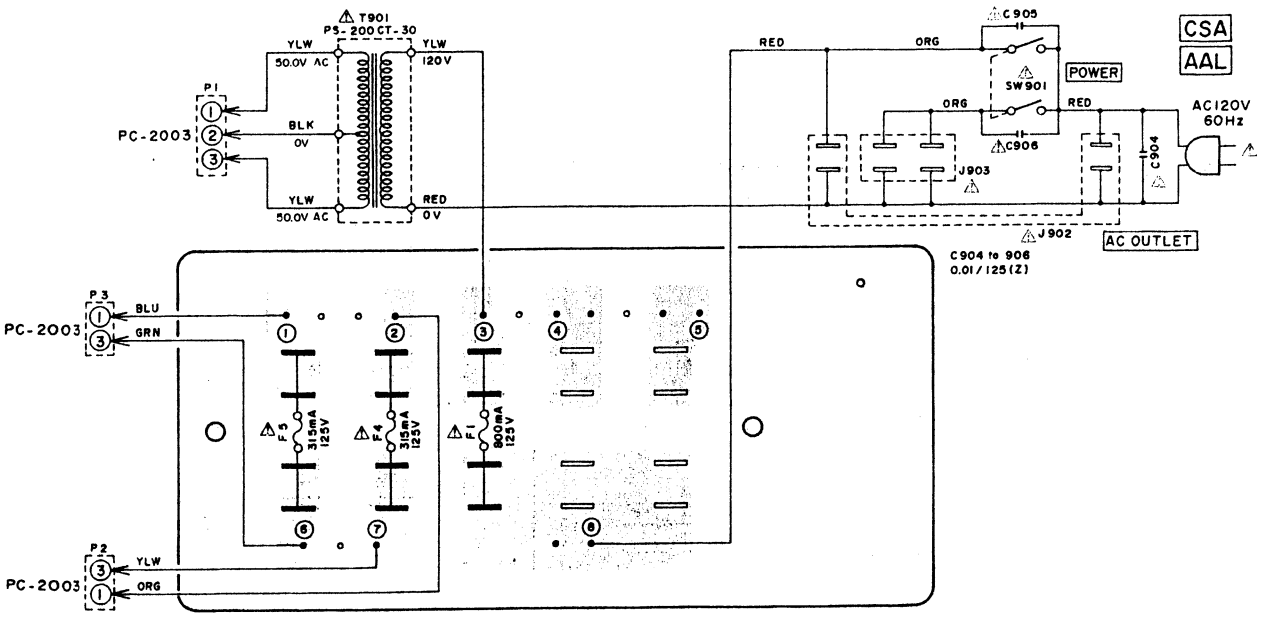

WARNING: ⚠INDICATES SAFETY CRITICAL COMPONENTS. FOR CONTINUED SAFETY, REPLACE SAFETY CRITICAL COMPONENTS ONLY WITH MANUFACTURER'S RECOMMENDED PARTS.

AVERTISSEMENT: ⚠IL INDIQUE LES COMPOSANTS CRITIQUES DE SÛRETÉ. POUR MAINTENIR LE DEGRÉ DE SÉCURITÉ DE L'APPAREIL NE REMPLACER LES COMPOSANTS DONT LE FONCTIONNEMENT EST CRITIQUE POUR LA SÉCURITÉ QUE PAR DES PIÈCES RECOMMANDÉES PAR LE FABRICANT.

7) FUSE P.C BOARD (E) PC-2035 (CEE, UK)

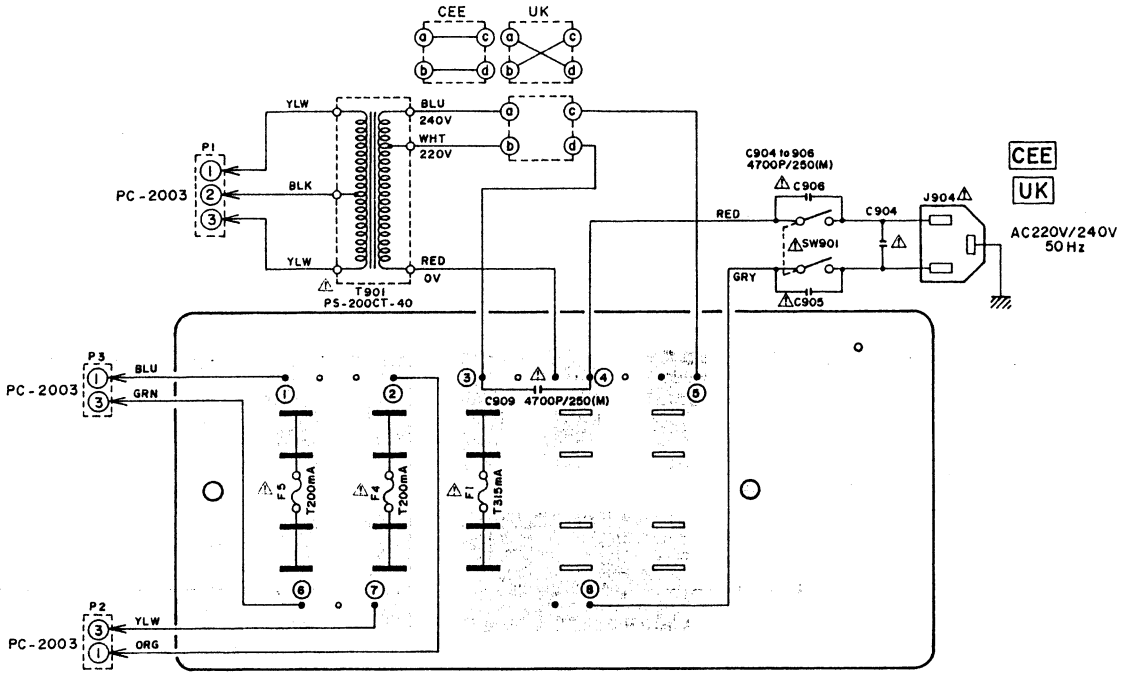

WARNING: ⚠INDICATES SAFETY CRITICAL COMPONENTS. FOR CONTINUED SAFETY, REPLACE SAFETY CRITICAL COMPONENTS ONLY WITH MANUFACTURER'S RECOMMENDED PARTS

AVERTISSEMENT: ⚠IL INDIQU LES COMPOSANTS CRITIQUES DE SÛRETÉ. POUR MAINTENIR LE DEGRE DE SECURITE DE L'APPAREIL NE REMPLACER LES COMPOSANTS DONT LE FONCTIONNEMENT EST CRITIQUE POUR LA SECURITE QUE PAR DES PIECES RECOMMANDEES PAR LE FABRICANT

3. MODEL PS-120M COMPOSITION OF VARIOUS P.C BOARDS

1) MAIN AMP P.C BOARD (L) PM-1201 AND TEMP. COMPENSATION P.C BOARD PM-1249

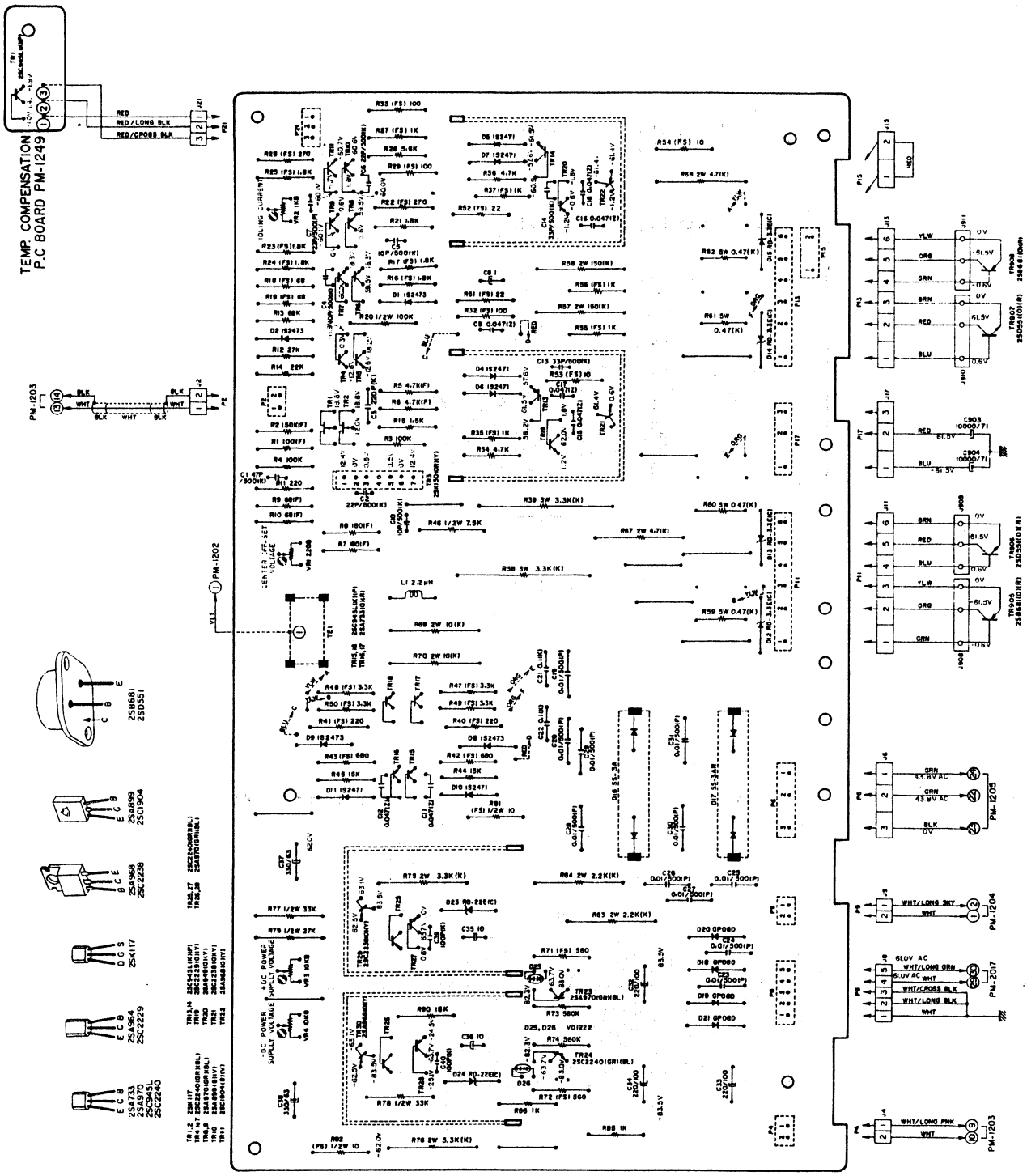

2) MAIN AMP P.C BOARD (R) PM-1202 AND TEMP. COMPENSATION P.C BOARD PM-1249

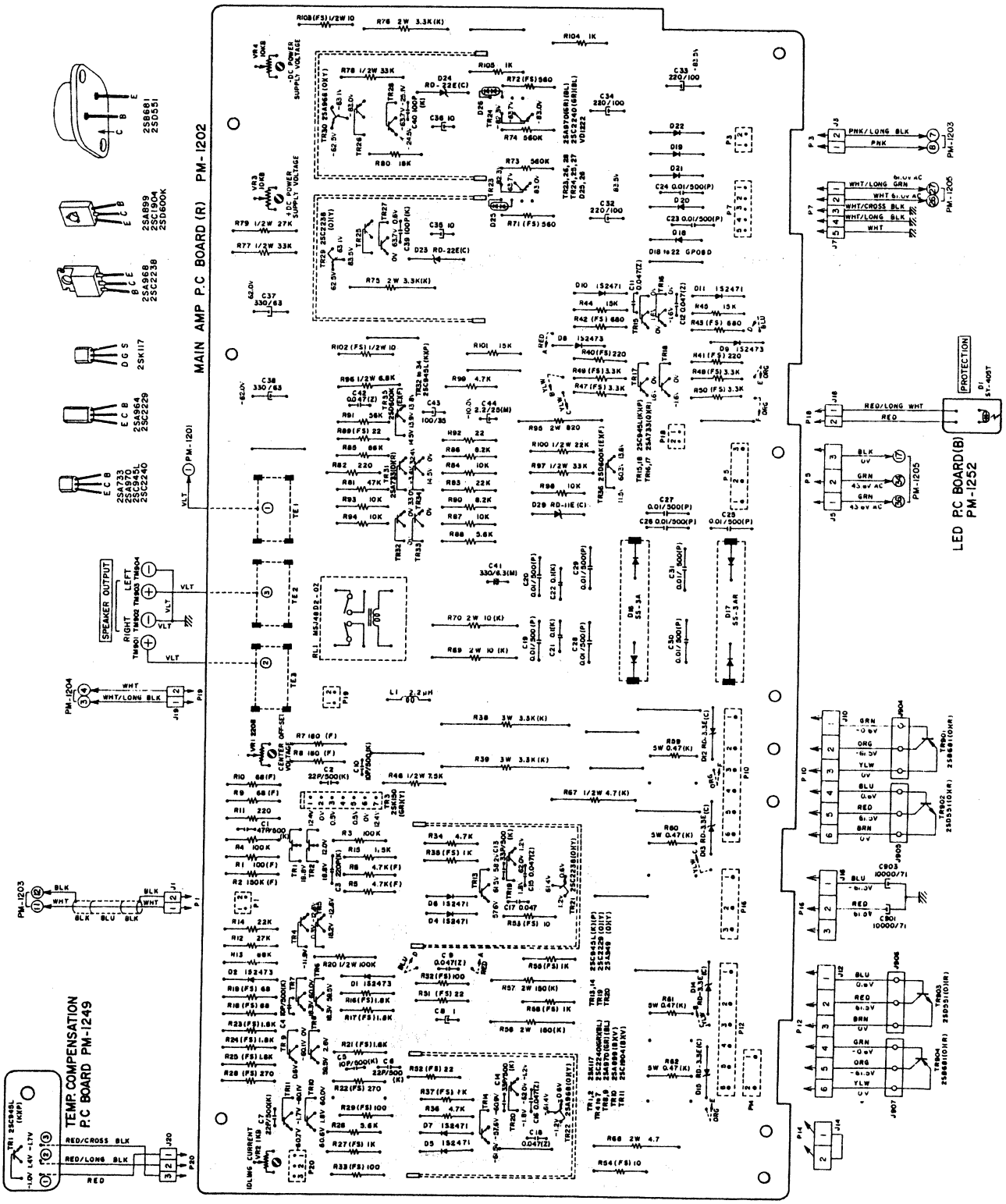

3) FILTER P.C BOARD PM-1203

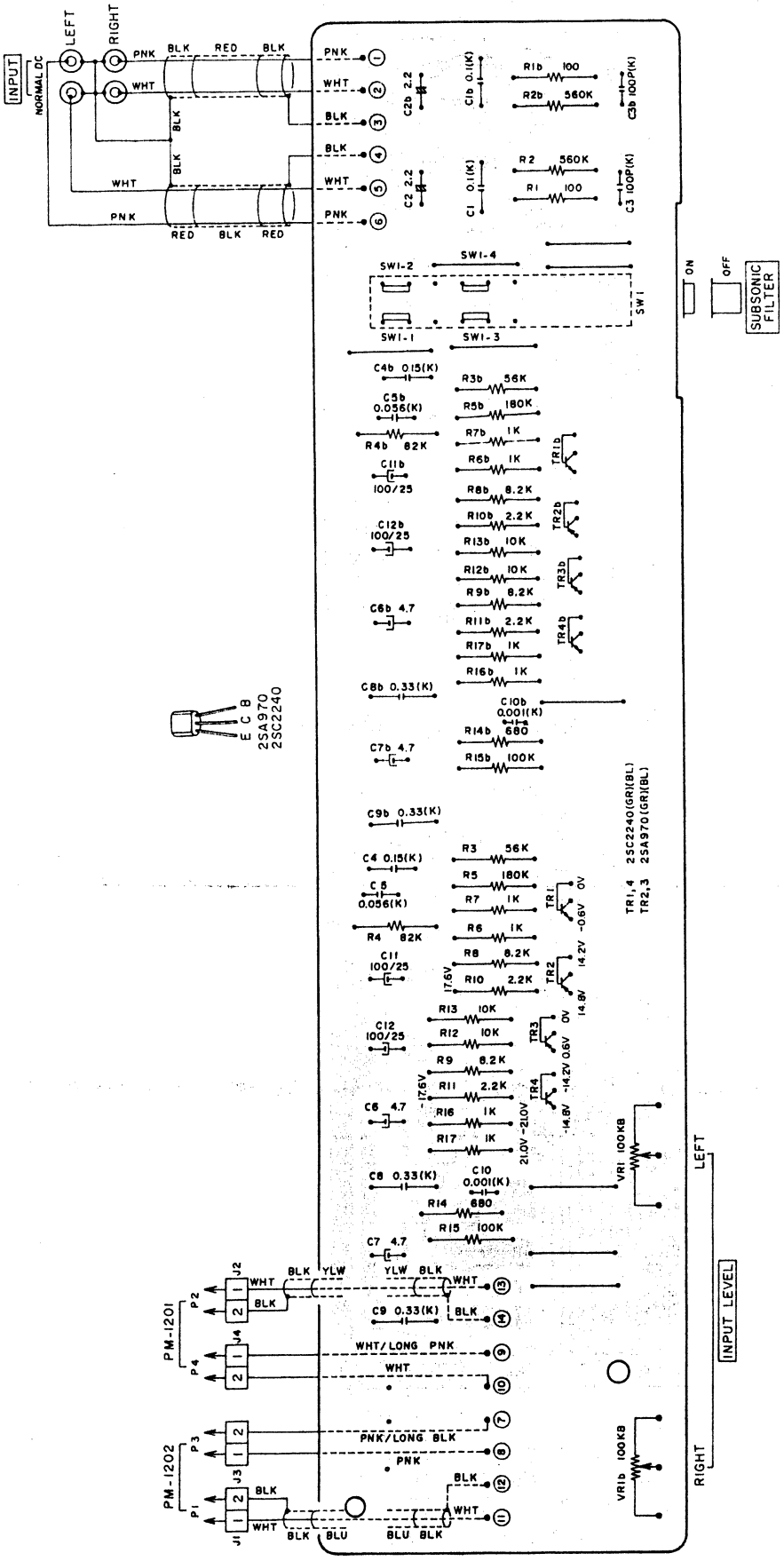

4) METER P.C BOARD PM-1204, LED P.C BOARD (A) PM-1250 AND LED P.C BOARD (B) PM-1252

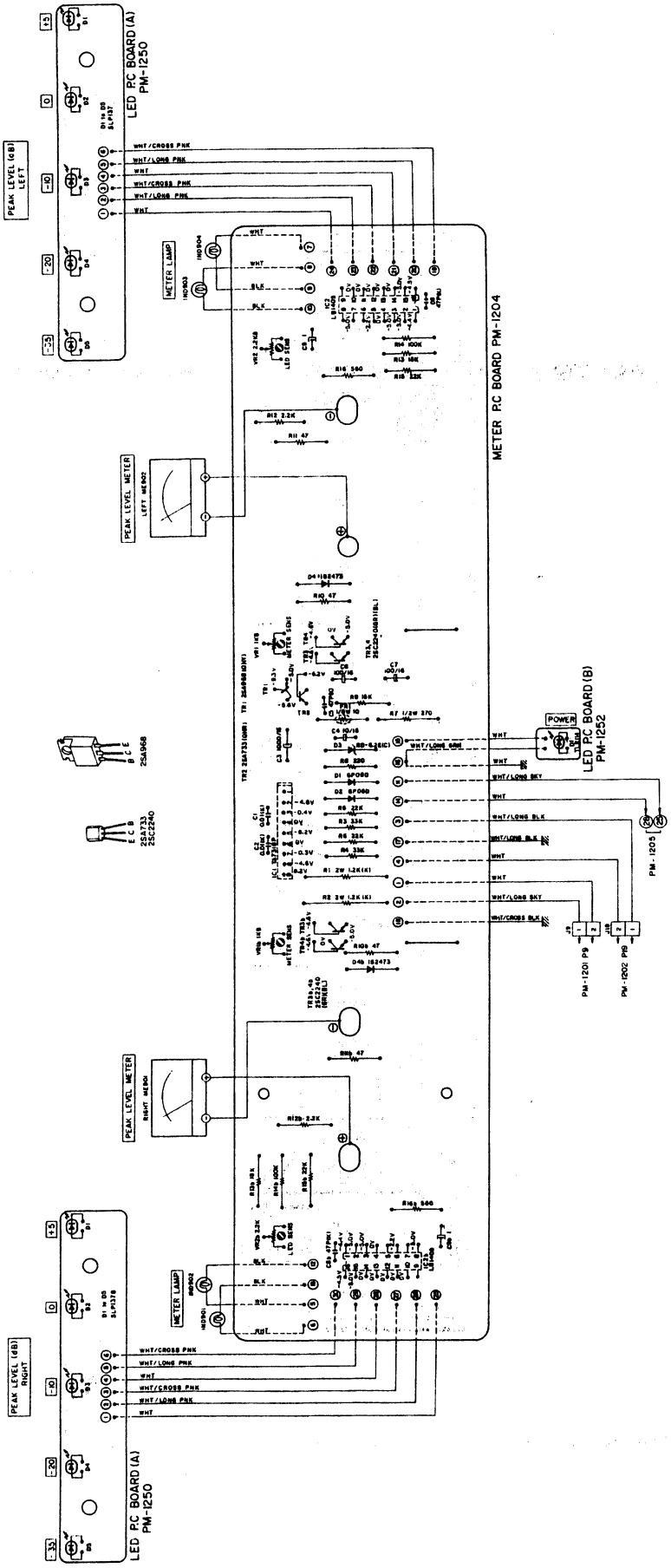

5) FUSE P.C BOARD (U) PM-1205 (U/T)

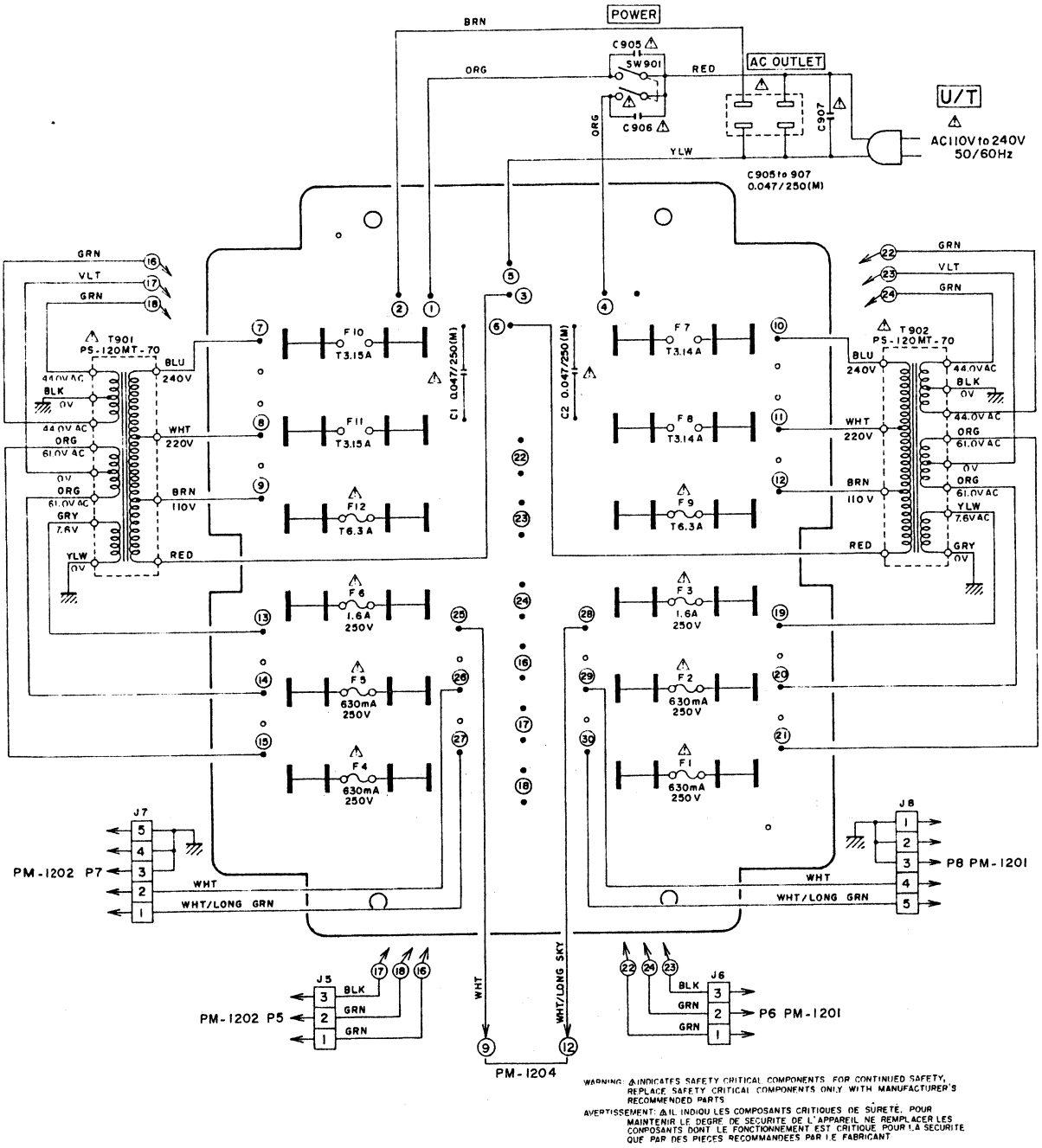

WARNING: ⚠ INDICATES SAFETY CRITICAL COMPONENTS. FOR CONTINUED SAFETY, REPLACE SAFETY CRITICAL COMPONENTS ONLY WITH MANUFACTURER'S RECOMMENDED PARTS.

AVERTISSEMENT: ⚠ IL INDIQU LES COMPOSANTS CRITIQUES DE SURETÉ. POUR MAINTENIR LE DEGRÉ DE SECURITE DE L'APPAREIL NE REMPLACER LES COMPOSANTS DONT LE FONCTIONNEMENT EST CRITIQUE POUR LA SECURITE QUE PAR DES PIECES RECOMMANDEES PAR LE FABRICANT

6) FUSE P.C BOARD (C) PM-1248 AND RELAY TERMINAL P.C BOARD PM-1247 (CSA, AAL)

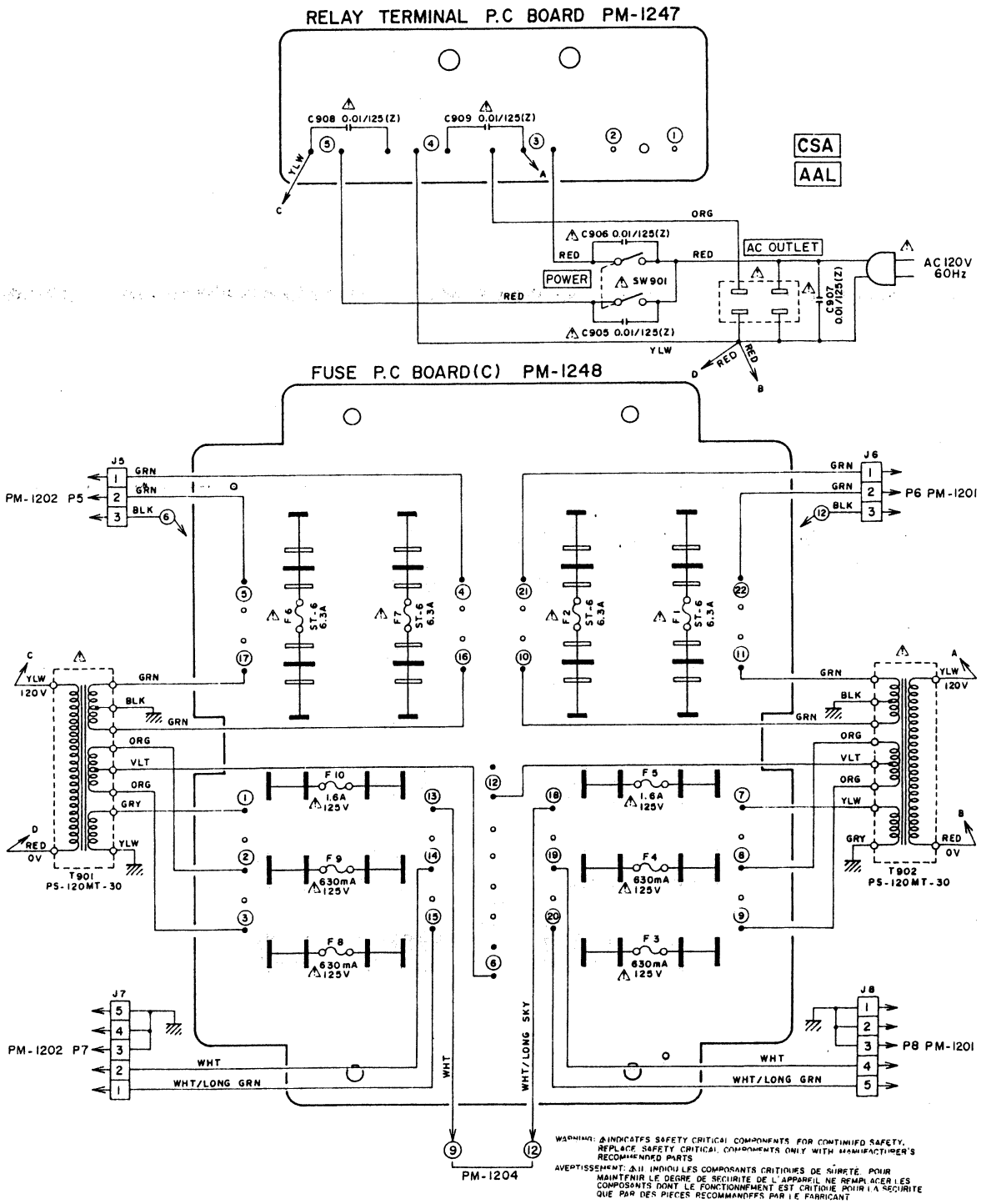

7) FUSE P.C BOARD (E) PM-1251 AND RELAY TERMINAL P.C BOARD PM-1247 (CEE, UK)

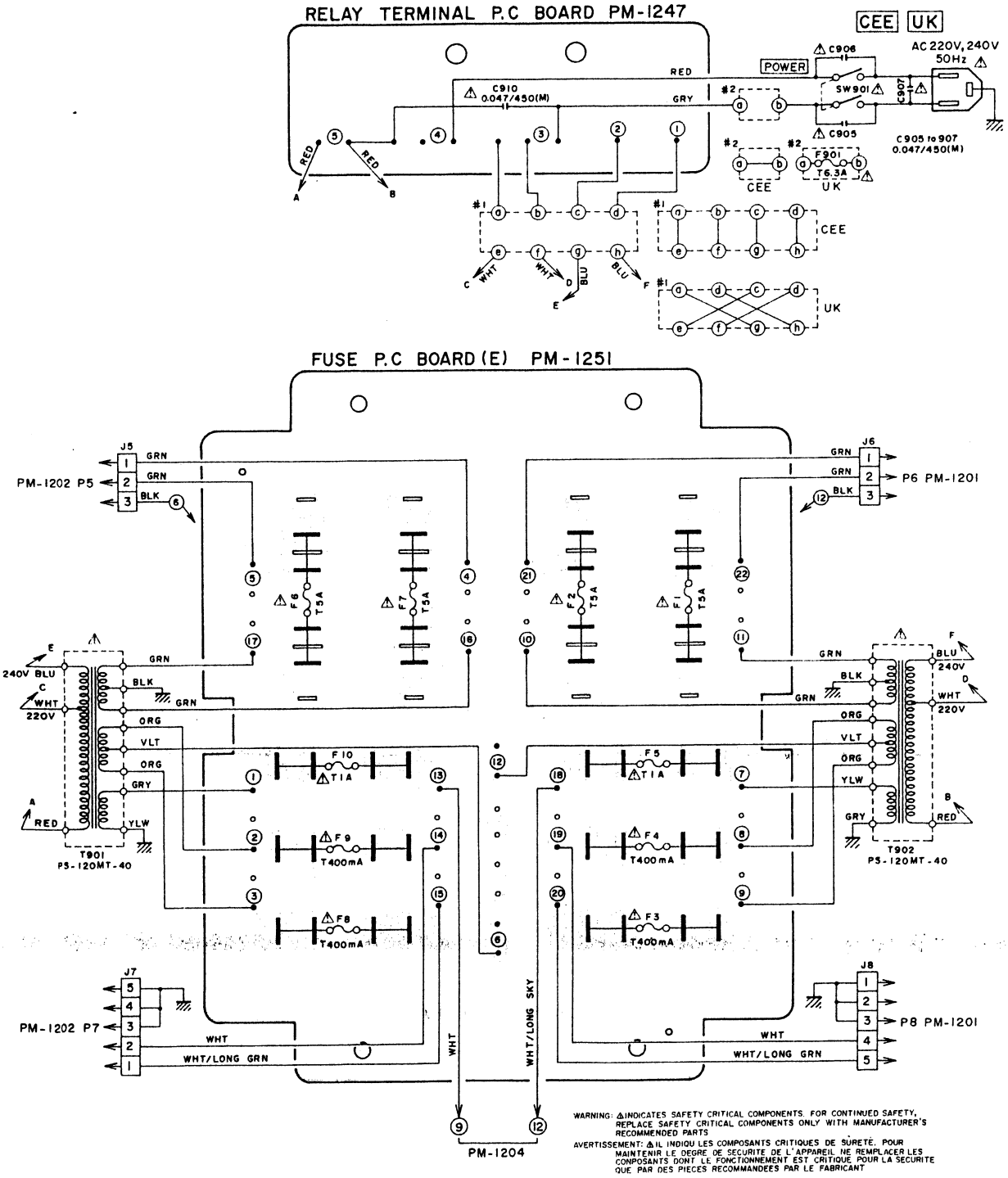

WARNING: ⚠INDICATES SAFETY CRITICAL COMPONENTS. FOR CONTINUED SAFETY, REPLACE SAFETY CRITICAL COMPONENTS ONLY WITH MANUFACTURER'S RECOMMENDED PARTS

AVERTISSEMENT: ⚠IL INDIQU LES COMPOSANTS CRITIQUES DE SÛRETÉ. POUR MAINTENIR LE DEGRÉ DE SECURITE DE L'APPAREIL NE REMPLACER LES COMPOSANTS DONT LE FONCTIONNEMENT EST CRITIQUE POUR LA SECURITE QUE PAR DES PIECES RECOMMANDEES PAR LE FABRICANT

4. MODEL PS-200M COMPOSITION OF VARIOUS P.C BOARDS

1) MAIN AMP P.C BOARD (L) PM-1201 AND TEMP. COMPENSATION P.C BOARD PM-1249

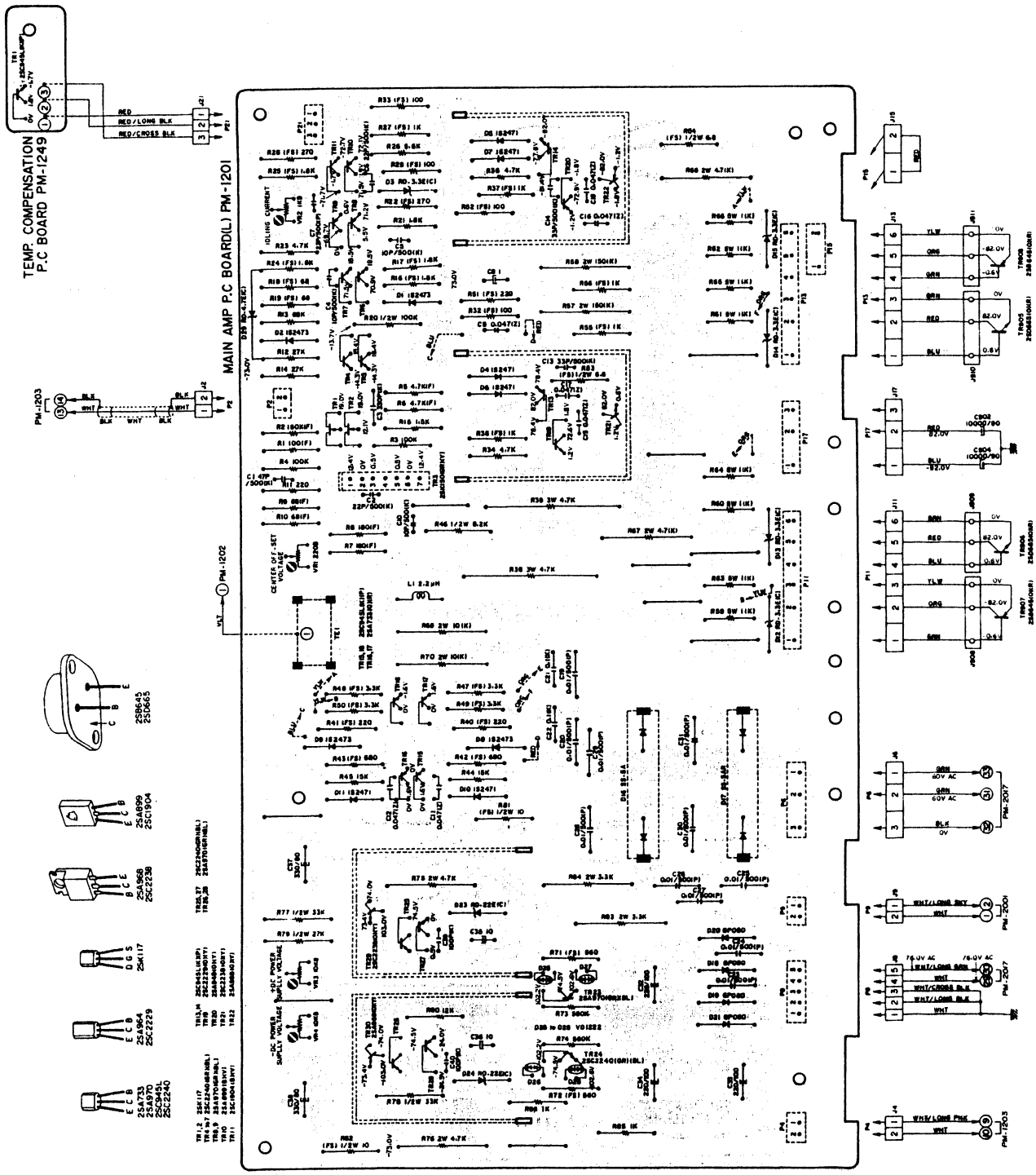

2) MAIN AMP P.C BOARD (R) PM-1202 AND TEMP. COMPENSATION P.C BOARD PM-1249

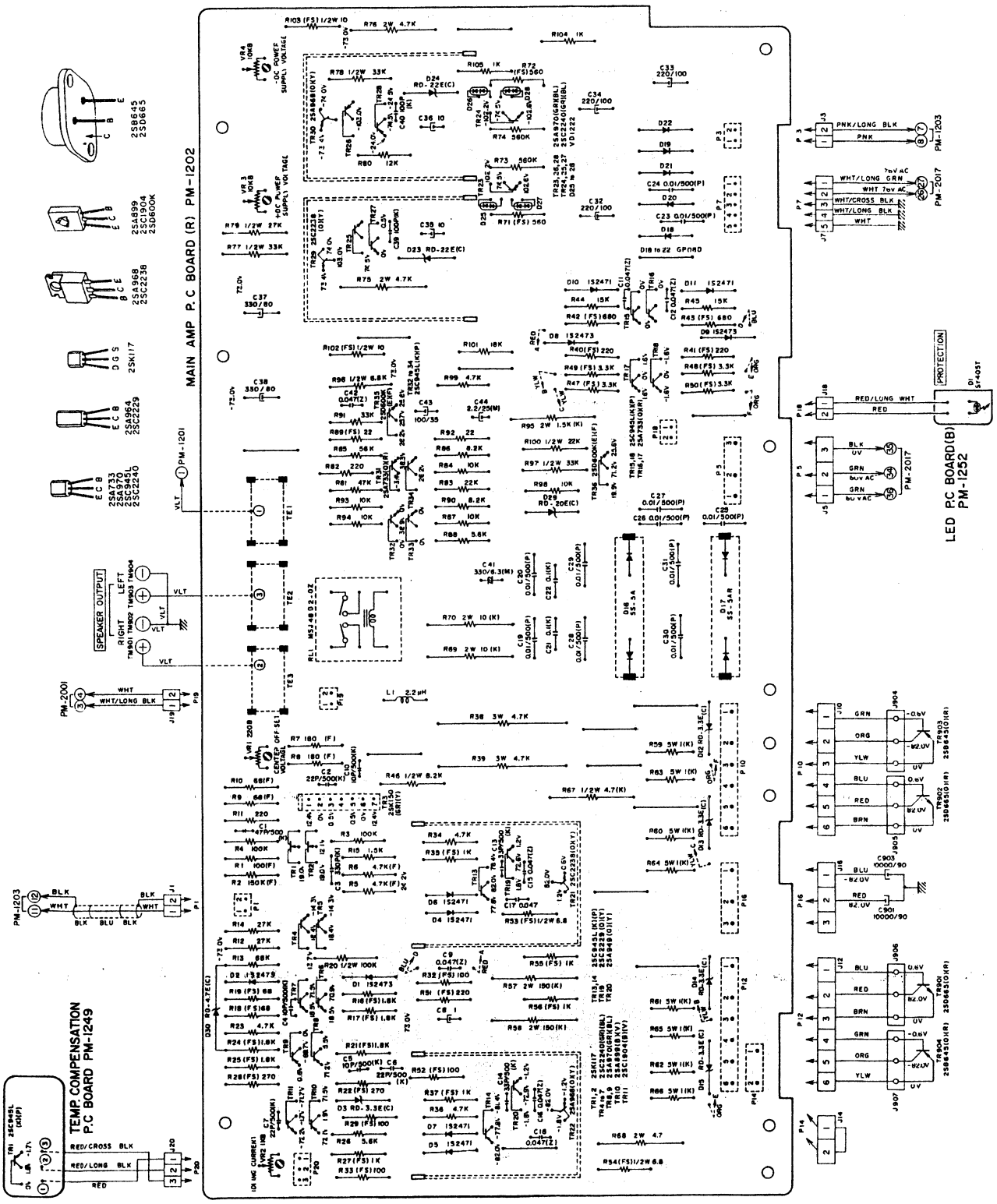

3) FILTER P.C BOARD PM-1203

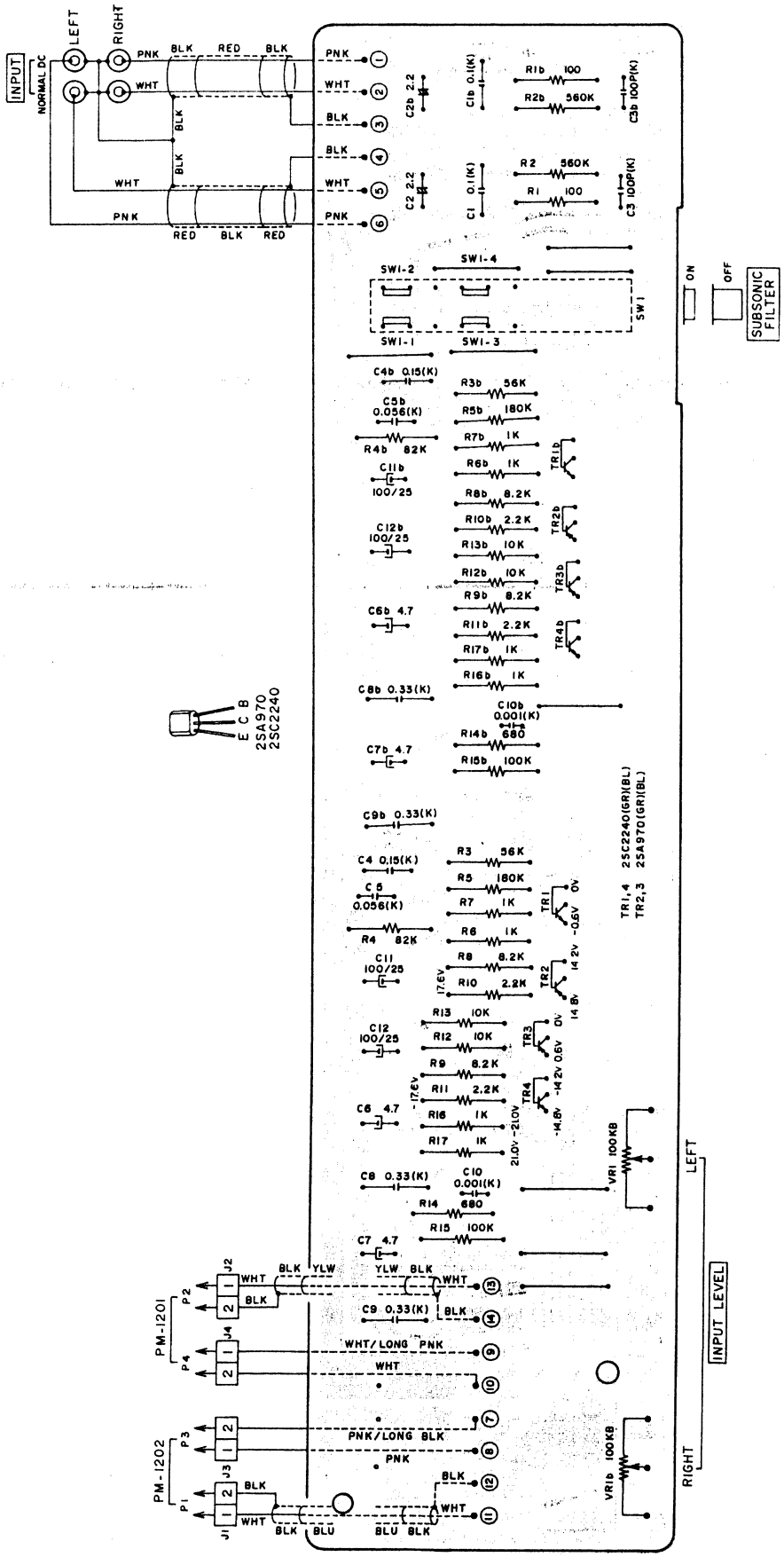

4) METER P.C BOARD PM-2001, LED P.C BOARD (B) PM-1252 AND LED P.C BOARD (C) PM-2016

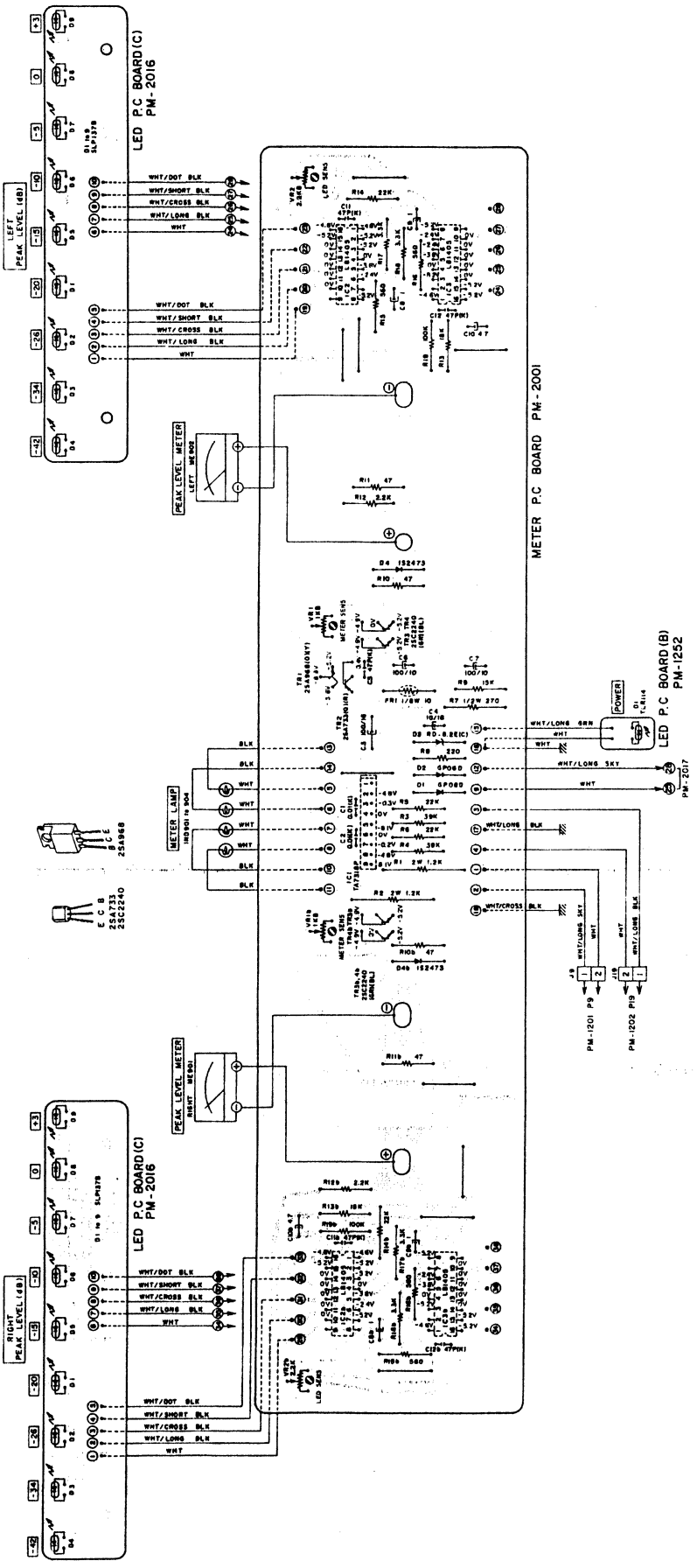

5) FUSE P.C BOARD (U) PM-2017 (U/T)

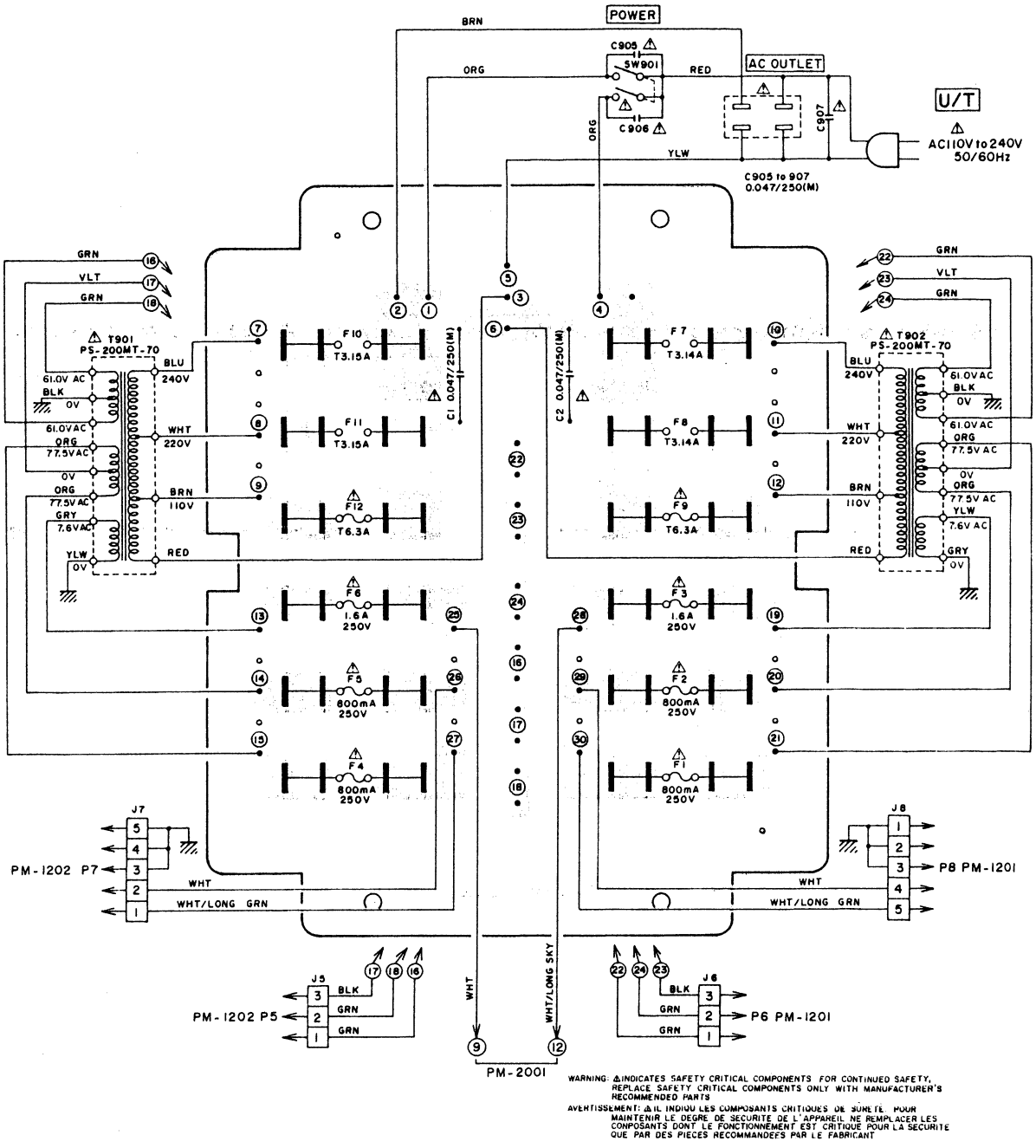

6) FUSE P.C BOARD (C) PM-2018 AND RELAY TERMINAL P.C BOARD PM-1247 (CSA, AAL)

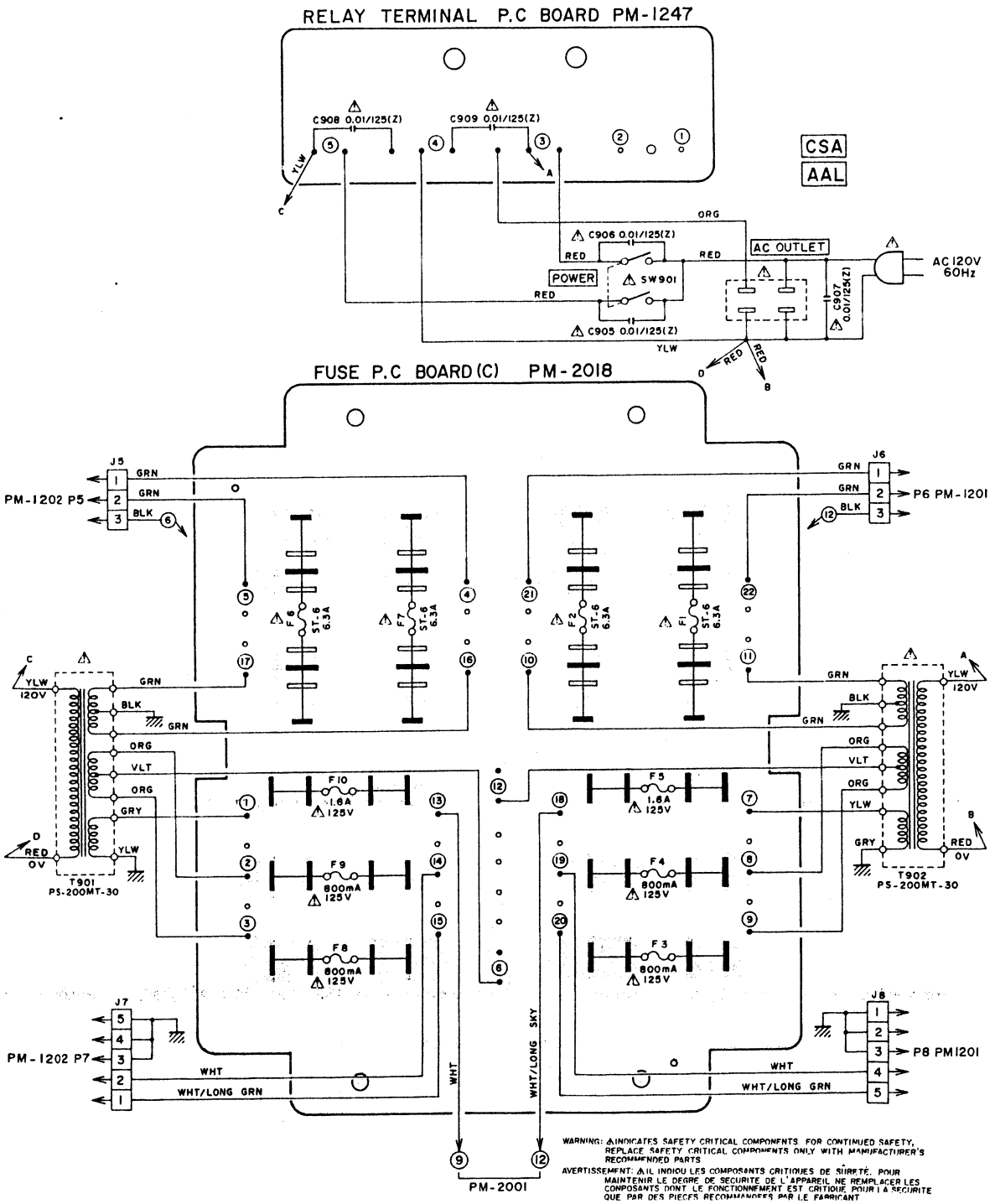

7) FUSE P.C BOARD (E) PM-2019 AND RELAY TERMINAL P.C BOARD PM-1247 (CEE, UK)

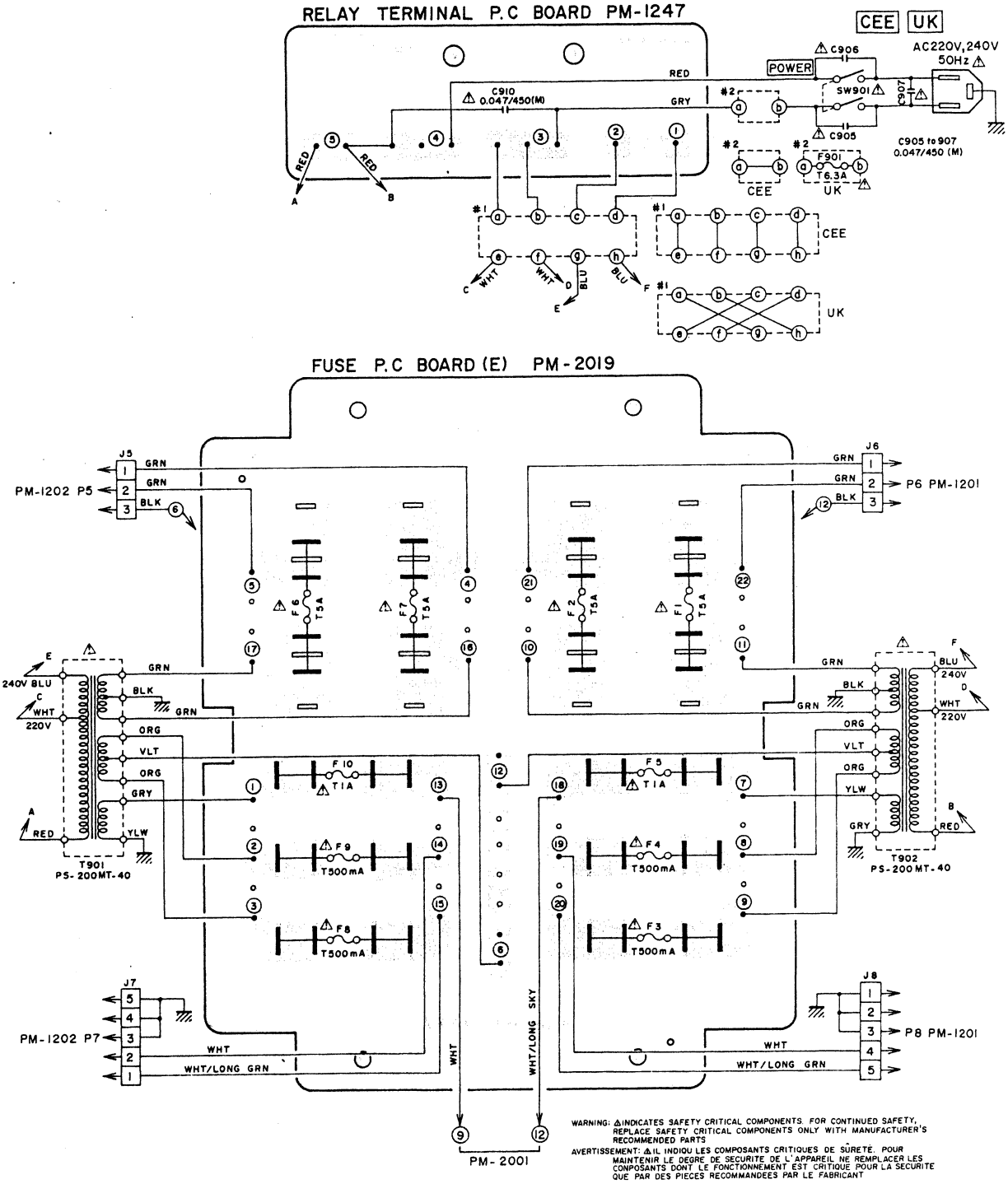

MEMO

SECTION 2

PARTS LIST

TABLE OF CONTENTS

I. MODEL PS-200C
1. RECOMMENDED SPARE PARTS LIST ... 60
2. PRE AMP P.C BOARD (PC-2056/2056S) BLOCK ... 61
3. POWER SUPPLY P.C BOARD (PC-2003/2003S) BLOCK ... 62
4. SELECTOR P.C BOARD (PC-2001/2001S) BLOCK ... 62
5. IMPEDANCE CHANGE P.C BOARD (PC-2033) BLOCK ... 63
6. LED P.C BOARD (PM-1252) BLOCK ... 63
7. ASSEMBLY BLOCK ... 64
8. FINAL ASSEMBLY BLOCK ... 66

II. MODEL PS-120M
1. RECOMMENDED SPARE PARTS LIST ... 67
2. MAIN AMP P.C BOARD (L) (PM-1201/1201S) BLOCK ... 69
3. MAIN AMP P.C BOARD (R) (PM-1202/1202S) BLOCK ... 70
4. FILTER P.C BOARD (PM-1203/1203S) BLOCK ... 71
5. METER P.C BOARD (PM-1204/1204S) BLOCK ... 71
6. ASSEMBLY BLOCK ... 72
7. FINAL ASSEMBLY BLOCK ... 74

III. MODEL PS-200M
1. RECOMMENDED SPARE PARTS LIST ... 75
2. MAIN AMP P.C BOARD (L) (PM-1201/1201S) BLOCK ... 77
3. MAIN AMP P.C BOARD (R) (PM-1202/1202S) BLOCK ... 78
4. FILTER P.C BOARD (PM-1203/1203S) BLOCK ... 79
5. METER P.C BOARD (PM-2001/2001S) BLOCK ... 79
6. ASSEMBLY BLOCK ... 80
7. FINAL ASSEMBLY BLOCK ... 82

IV. INDEX
1. MODEL PS-200C ... 83
2. MODEL PS-120M ... 84
3. MODEL PS-200M ... 85

Resistor and Capacitor which is not listed in this parts list, please refer to COMMON LIST FOR SERVICE PARTS.

51 – 56 rect

HOW TO USE THIS PARTS LIST

1. This parts list is compiled by various individual blocks based on assembly process.
2. When ordering parts, please describe parts number, serial number, and model number in detail.
3. How to read List

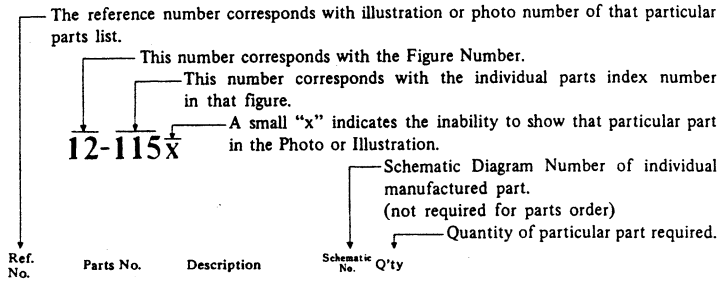

FLYWHEEL BLOCK #13

Ref. No.	Parts No.	Description	Schematic No.	Q'ty
12-115x	800425	Flywheel Block Assy. Comp.	RDG #13	1
12-116	244506	Flywheel Only	RD-233	1
12-117x	244754	Felt, Flywheel	RD-275	1
12-118	251324	Main Metal Case	RD-236	1
12-119	253080	Main Metal	RD-237	1

4. The symbol numbers shown on the P.C. Board list can be matched with the Composite Views of Components of the Schematic Diagram or Service Manual.
5. Please utilize separate "Common List for Service Parts" for Resistor Parts orders.
6. The shape of the parts and parts name, etc. can be confirmed by comparing them with the parts shown on the Electrical Parts Table of P.C. Board.
7. Both the kind of part and installation position can be determined by the Parts Number. To determine where a parts number is listed, utilize Parts Index at end of Parts List.
   It is necessary first of all to find the Parts Number. This can be accomplished by using the Reference Number listed at right of parts number in the Parts Index. (meaning of ref. no. outlined in Item 3 above).
8. Utilize separate "Price List for Parts" to determine unit price. The most simple method of finding parts Price is to utilize the reference number.

CAUTION:
1. When placing an order for parts, be sure to list the parts no. model no., and description. There are instances in which if any of this information is omitted, parts cannot be shipped or the wrong parts will be delivered.
2. Please be careful not to make a mistake in the parts no. If the parts no. is in error, a part different from the one ordered may be delivered.
3. Because parts number and parts unit supply in the Preliminary Service Manual (Basic Parts List) may be partially changed, please use this parts list for all future reference.

WARNING: ⚠ INDICATES SAFETY CRITICAL COMPONENTS. FOR CONTINUED SAFETY, REPLACE SAFETY CRITICAL COMPONENTS ONLY WITH MANUFACTURER'S RECOMMENDED PARTS.

AVERTISSEMENT: ⚠ IL INDIQU LES COMPOSANTS CRITIQUES DE SURETE. POUR MAINTENIR LE DEGRE DE SECURITE DE L'APPAREIL NE REMPLACER LES COMPOSANTS DONT LE FONCTIONNEMENT EST CRITIQUE POUR LA SECURITE QUE PAR DES PIECES RECOMMANDEES PAR LE FABRICANT.

AC INLET SYSTEM

This model is equipped with an AC INLET SYSTEM. Please refer to the AC INLET SYSTEM CHART below for the specific type. By the AC INLET SYSTEM, AC (mains) cord can be connected to and disconnected from the model because the model is provided with socket exclusively for AC (mains) cord on its main body.
Please note, however, that certain models are not equipped with this system and has a built-in AC (mains) cord as before.

AC INLET SYSTEM CHART

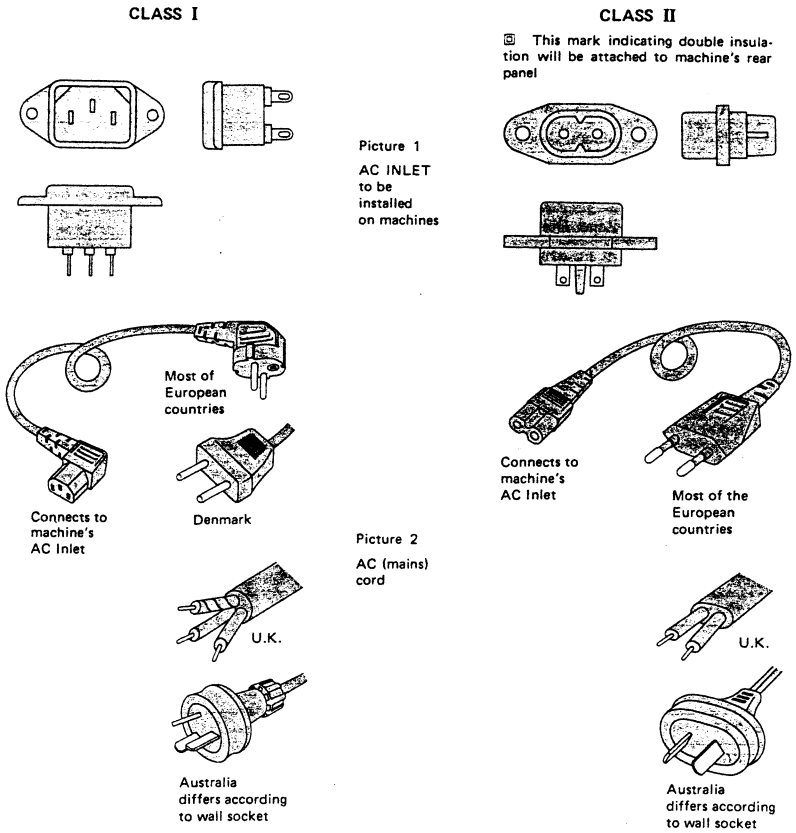

Parts List for AC (mains) Cord Set

Standard		Description	Type of AC Inlet	Parts No.
Class I	CEE	Cord Set CEE (3 cores)	3P	EW302993
	BEAB	Cord Set BEAB (3 cores)	3P	EW302994
	SAA	Cord Set SAA (3 cores)	3P	EW302996
	U/T	Cord Set U/T (3 cores)	3P	EW302646
Class II	CEE	Cord Set CEE (2 cores)	2P	EW638144
	BEAB	Cord Set BEAB (2 cores)	2P	EW302995
	SAA	Cord Set SAA (2 cores)	2P	EW302991
	U/T	Cord Set U/T (2 cores)	2P	EW302899

I. MODEL PS-200C

1. RECOMMENDED SPARE PARTS LIST

Because, if the parts listed below are on hand, almost any repair can be accomplished, we suggest that you stock these Recommended Spare Parts Items.

Parts No.	Description	Note
BA311370	Power Supply P.C Board Comp. PS-200C	
BA313970	Pre Amp P.C Board Comp. PS-200C	(New Type)
BT311809	⚠ Power Trans. PS-200CT-30	(CSA)
BT311810	⚠ Power Trans. PS-200CT-40	(CEE, UK)
BT311811	⚠ Power Trans. PS-200CT-70	(U/T)
ED311794	LED SY405T	
ED245430	Silicon Diode GP08G	
ED624903	Silicon Diode 1S2473	
ED490511	Varistor VD1222	
ED311752	Zener Diode RD-22E (C)	
ED311853	Zener Diode RD-6.2E (C)	
EF306088	⚠ Fuse 315mA 125V	(CSA)
EF306125	⚠ Fuse 315mA 250V	(U/T)
EF309391	⚠ Fuse 800mA 125V	(CSA)
EF309388	⚠ Fuse 800mA 250V	(U/T)
EF300596	⚠ Fuse (FST) 200mAT	(CEE, UK)
EF300598	⚠ Fuse (FST) 315mAT	(CEE, UK)
EI311789	IC TA72220P	
EP249344	Reed Relay, L Type L24	
ES664222	⚠ Push SW. SDG-5P TV-5 U/C	SW901 (U/T, CSA)
ES665807	⚠ Push SW. SDG-5P 5A/80A 250V	SW901 (CEE, UK)
ES311799	Lever SW. SLA22301	
ES311797	Lever SW. SLA24201	(Old Type)
ES311798	Lever SW. SLA24301	
ES315601	Lever SW. SLA26301	(New Type)
ES311803	Rotary SW. SR-26 (PH-2)N 2-4-5 20KC	
ES311802	Rotary SW. SR-26 (PH-2)N 4-8-6 20KC	
ES246227	Slide SW. SSC323E	
ET302465	FET 2SK117 (SPECIAL)	
ET311792	FET 2SK150 (GR) (Y)	
ET311791	Transistor 2SA968 (O) (Y)	
ET305463	Transistor 2SA970 (GR) (BL)	
ET301165	Transistor 2SB631K (E) (F)	
ET311790	Transistor 2SC2238 (O) (Y)	
ET307195	Transistor 2SC2240 (GR) (BL)	
ET300931	Transistor 2SD600K (E) (F)	
EV311795	Double Axial 6-Throw/Vol. (Detent) WKHQ110	(Old Type)
EV315600	Double Axial 6-Throw/Vol. (Detent) WKHQ110C01	(New Type)
EV618052	Semi-Fixed/Vol. CR19R 1KB	
EV312338	Semi-Fixed/Vol. CR19R 22KB	
EV311796	2 Throw/Vol. (Detent) GH30E 24K (SPECIAL)×2	

2. PRE AMP P.C BOARD (PC-2056/2056S)

BLOCK

Symbol No.	Parts No.	Description	Schematic No.
2-1	BA313970	Pre Amp P.C Board Comp. PS-200C (New Type)	PC-2056
2-TR1	ET305463	Transistor 2SA970(GR)(BL)	45-1-303
2-TR2	ET307195	Transistor 2SC2240(GR)(BL)	45-1-302
2-TR3	ET305463	Transistor 2SA970(GR)(BL)	45-1-303
2-TR4,5	ET307195	Transistor 2SC2240(GR)(BL)	45-1-302
2-TR6	ET305463	Transistor 2SA970(GR)(BL)	45-1-303
2-TR7	ET311792	FET 2SK150(GR)(Y)	45-12-22
2-TR8,9	ET302465	FET 2SK117(SPECIAL)	45-12-16
2-TR10to12	ET307195	Transistor 2SC2240(GR)(BL)	45-1-302
2-TR13	ET305463	Transistor 2SA970(GR)(BL)	45-1-303
2-TR14,15	ET307195	Transistor 2SC2240(GR)(BL)	45-1-302
2-TR16	ET305463	Transistor 2SA970(GR)(BL)	45-1-303
2-TR17	ET300931	Transistor 2SD600K(E)(F)	45-1-278
2-TR18	ET301165	Transistor 2SB631K(E)(F)	45-1-277
2-TR21to24	ET302465	FET 2SK117 (SPECIAL)	45-12-16
2-TR25to27	ET307195	Transistor 2SC2240(GR)(BL)	45-1-302
2-TR28	ET305463	Transistor 2SA970(GR)(BL)	45-1-303
2-TR29,30	ET307195	Transistor 2SC2240(GR)(BL)	45-1-302
2-TR31	ET305463	Transistor 2SA970(GR)(BL)	45-1-303
2-TR32	ET307195	Transistor 2SC2240(GR)(BL)	45-1-302
2-TR33,34	ET305463	Transistor 2SA970(GR)(BL)	45-1-303
2-TR35	ET307195	Transistor 2SC2240(GR)(BL)	45-1-302
2-D1	ED490511	Varistor VD1222	45-10-7
2-D2to4	ED624903	Silicon Diode 1S2473	45-3-28
2-D5,6	ED490511	Varistor VD1222	45-10-7
2-D7to9	ED624903	Silicon Diode 1S2473	45-3-28
2-D10	ED490511	Varistor VD1222	45-10-7
2-RL1	EP249344	Reed Relay, L Type L24	47-2-28
2-VR1	EV315600	Double-Axial 6-Throw/Vol. (Detent) WKHQ110C01(New Type)	36-37-7
2-VR1	EV311795	Double-Axial 6-Throw/Vol. (Detent) WKHQ110 (Old Type)	36-37-3
2-VR2	EV311796	2-Throw/Vol. (Detent) GH30E 24K(SPECIAL)×2	36-37-7
2-VR3	EV311796	2-Throw/Vol. (Detent) GH30E 24K(SPECIAL)×2	36-37-7
2-VR4	EV618052	Semi-Fixed/Vol. CR19R 1KB	36-28-4
2-SW1	ES311798	Lever SW. SLA24301	25-12-52
2-SW2	ES311799	Lever SW. SLA22301	25-12-53
2-SW3	ES315601	Lever SW. SLA26301 (New Type)	25-12-64
2-SW3	ES311797	Lever SW. SLA24201 (Old Type)	25-12-51
2-C8	EC311780	NP/C. 4.7μF 50WV	24-17-33
2-C16	EC312462	Styrol/C. 560PF(K) 50WV	24-11-14
2-C17	EC311788	Polypro. Film/C. 0.15μF(G) 100WV	24-22-3
2-C18	EC311787	Polypro. Film/C. 0.039μF(G) 100WV	24-22-3
2-C19	EC311786	Polypro. Film/C. 0.0033μF(G) 100WV	24-22-3
2-C23	EC311780	NP/C. 4.7μF 50WV	24-17-33
2-C30	EC311781	NP/C. 22μF 50WV	24-17-33
2-C32	EC311780	NP/C. 4.7μF 50WV	24-17-33
2-C35	EC311782	NP/C. 47μF 50WV	24-17-33
2-C49	EC311778	NP/C. 1μF 50WV	24-17-33
2-C50	EC311780	NP/C. 4.7μF 50WV	24-17-33
2-C51	EC311780	NP/C. 4.7μF 50WV	24-17-33
2-R1	ER310323	Metal Film/R. 1/4W 10 ohms (F)	35-17-12
2-R2	ER311751	Metal Film/R. 1/4W 100 ohms (F)	35-17-12
2-R5,6	ER312461	Metal Film/R. 1/4W 820 ohms (F)	35-17-12
2-R28,29	ER311875	Metal Film/R. 1/4W 330 ohms (F)	35-17-12
2-R31	ER311772	Metal Film/R. 1/4W 39 ohms (F)	35-17-12
2-R40	ER311753	Metal Film/R. 1/4W 21K (F)	35-17-12
2-R41	ER311754	Metal Film/R. 1/4W 1.78K (F)	35-17-12
2-R46,47	ER311755	Metal Oxide Film/R. 1W 15 ohms (K)	35-15-10
2-R51	ER311757	Metal Film/R. 1/4W 4.7K (F)	35-17-12
2-R52	ER311759	Metal Film/R. 1/4W 82K (F)	35-17-12
2-R53	ER311760	Metal Film/R. 1/4W 18K (F)	35-17-12
2-R54	ER311761	Metal Film/R. 1/4W 4.3K (F)	35-17-12
2-R55	ER310324	Metal Film/R. 1/4W 1K (F)	35-17-12
2-R63	ER311773	Metal Film/R. 1/4W 3.3K (F)	35-17-12
2-R64	ER311757	Metal Film/R. 1/4W 4.7K (F)	35-17-12
2-R75	ER308849	Carbon/R. F 1/4W 220 ohms (J)	35-11-25
2-R76,77	ER307196	Carbon/R. F 1/4W 100 ohms (J)	35-11-25
2-R80	ER311762	Metal Film/R. 1/4W 9.1K (F)	35-17-12
2-R81	ER311763	Metal Film/R. 1/4W 2.4K (F)	35-17-12
2-R82	ER310436	Metal Film/R. 1/4W 3.9K (F)	35-17-12
2-R83	ER311764	Metal Film/R. 1/4W 750 ohms (F)	35-17-12
2-R84	ER311765	Metal Film/R. 1/4W 110 ohms (F)	35-17-12
2-R85	ER311766	Metal Film/R. 1/4W 47K (F)	35-17-12
2-R86	ER311767	Metal Film/R. 1/4W 1.2K (F)	35-17-12
2-R87	ER311768	Metal Film/R. 1/4W 270 ohms (F)	35-17-12
2-R102,103	ER307196	Carbon/R. F 1/4W 100 ohms (J)	35-11-25
2-R105	ER310326	Metal Film/R. 1/4W 10K (F)	35-17-12
2-R106	ER310328	Metal Film/R. 1/4W 36K (F)	35-17-12
2-2	ZS421740	Screw, Pan 3×8 (Black)	

When ordering parts, please describe Parts Number, Description, and Model Number in detail.

3. POWER SUPPLY P.C BOARD (PC-2003/2003S) BLOCK

Symbol No.	Parts No.	Description	Schematic No.
3-1	BA311370	Power Supply P.C Board Comp. PS-200C	PC-2054
3-IC1	EI311789	IC TA7220P	45-8-327
3-TR1	ET305463	Transistor 2SA970 (GR) (BL)	45-1-303
3-TR2	ET307195	Transistor 2SC2240 (GR) (BL)	45-1-302
3-TR3	ET311790	Transistor 2SC2238(O)(Y)	45-1-339
3-TR4	ET311791	Transistor 2SA968(O)(Y)	45-1-338
3-TR5	ET307195	Transistor 2SC2240 (GR) (BL)	45-1-302
3-TR6	ET305463	Transistor 2SA970 (GR) (BL)	45-1-303
3-TR7	ET307195	Transistor 2SC2240 (GR) (BL)	45-1-302
3-TR8	ET305463	Transistor 2SA970 (GR) (BL)	45-1-303
3-TR9	ET300931	Transistor 2SD600K(E)(F)	45-1-278
3-TR10	ET301165	Transistor 2SB631K(E)(F)	45-1-277
3-TR11	ET300931	Transistor 2SD600K(E)(F)	45-1-278
3-D1to5	ED245430	Silicon Diode GP08G	45-2-68
3-D6,7	ED490511	Varistor VD1222	45-10-7
3-D8	ED311752	Zener Diode RD-22E (C)	45-6-72
3-D9	ED490511	Varistor VD1222	45-10-7
3-SW1	ES311797	Lever SW. SLA24201	25-12-51
3-VR1	EV312338	Semi-Fixed/Vol. CR19R 22KB	36-28-4
3-R7	ER312460	Carbon/R. F 1/2W 15 ohms (J)	35-11-27
3-R12,13	ER311748	Metal Film/R. 1/4W 22K (F)	35-17-12
3-R29	ER483287	Metal Oxide Film/R. 2W 100 ohms (K)	35-15-8
3-2	ZS421740	Screw, Pan 3x8 (Black)	

4. SELECTOR P.C BOARD (PC-2001/2001S) BLOCK

Symbol No.	Parts No.	Description	Schematic No.
4-TR1	ET635220	Transistor 2SC945L(K)(P)	45-1-85
4-TR2	ET300931	Transistor 2SD600K(E)(F)	45-1-278
4-D1	ED311853	Zener Diode RD-6.2E(C)	45-6-72
4-RL1	EP249344	Reed Relay L Type L24	47-2-28
4-SW1	ES311802	Rotary SW. SR-26(PH-2)N 4-8-6 20KC	25-6-164
4-SW2	ES311803	Rotary SW. SR-26(PH-2)N 2-4-5 20KC	25-6-165
4-J1	EJ312463	6P Pin Jack	31-5-147
4-J2	EJ293376	6P Pin Jack	31-1-198
4-J3,4	EJ293365	4P Pin Jack	31-1-197
4-J5	EJ312464	2P Pin Jack	31-5-148
4-C2	EC662128	Solid Aluminum/C. (Vert.) 2.2μF(M) 25WV	24-19-2
4-C5	EC311780	NP/C. 4.7μF 50WV	24-17-33
4-R1	ER311774	Metal Film/R. 1/4W 91K (F)	35-17-12
4-R7	ER311876	Metal Oxide Film/R. 3W 1.5K (K)	35-15-9

5. IMPEDANCE CHANGE P.C BOARD (PC-2033) BLOCK

Symbol No.	Parts No.	Description	Schematic No.
5-SW1	ES246227	Slide SW. SSC323E	25-3-119
5-R1	ER311774	Metal Film/R. 1/4W 91K (F)	35-17-12
5-R2	ER311775	Metal Film/R. 1/4W 51K (F)	35-17-12

6. LED P.C BOARD (PM-1252) BLOCK

Symbol No.	Parts No.	Description	Schematic No.
6-D1	ED311794	LED SY405T	45-15-24

7. ASSEMBLY BLOCK

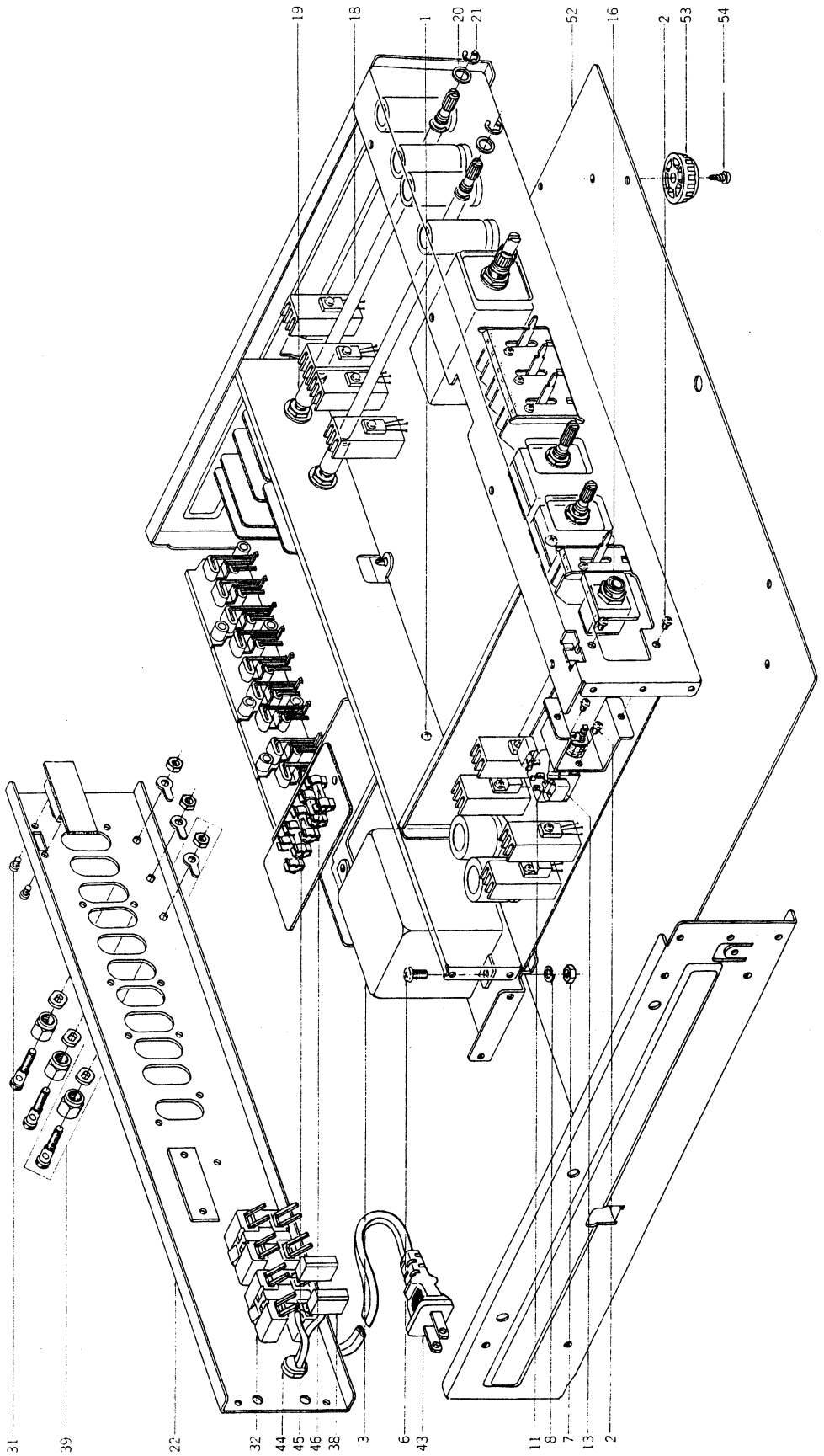

7. ASSEMBLY BLOCK

Ref. No.	Parts No.	Description	Schematic No.
7-1	ZS308846	Tapping Screw, #2, 3x8 (BR) (Oval Neck)	7-1-69
7-2	ZS608477	Screw, Pan 3x4	
7-3	BT311811	⚠ Power Trans. PS-200CT-70 (U/T)	38-4-685
7-4x	BT311809	⚠ Power Trans. PS-200CT-30 (CSA)	38-4-687
7-5x	BT311810	⚠ Power Trans. PS-200CT-40 (CEE, UK)	38-4-686
7-6	ZS537006	Screw, Bind 4x8 (Black)	
7-7	ZW413188	Nut, #1, M4	
7-8	ZW273914	Spring Washer, M4	
7-9x	ZS201778	Screw, Pan 4x8	
7-10x	ZW413188	Nut, #1, M4	
7-11	ES664222	⚠ Push SW. SDG-5P TV-5 U/C (U/T, CSA)	25-5-202
7-12x	ES665807	⚠ Push SW. SDG-5P 5A/80A 250V (CEE, UK)	25-5-182
7-13	EC283375	⚠ MP/C. 0.047μF(M) 250WV (U/T)	24-9-118
7-14x	EC286198	⚠ Ceramic/C. AL-10 0.01μF(Z) 125WV (CSA)	24-5-69
7-15x	EC301320	⚠ MP/C. 4700PF(M) 250WV (CEE, UK)	24-9-122
7-16	EJ311808	Headphone Jack	31-2-100
7-17x	ZS311745	Tapping Screw, #2, 3x8 (BR) W=8 (Black)	
7-18	MS311709	Relay Shaft	PC-2008
7-19	TA646773	Joint	AA5240
7-20	ZW322110	Washer (Nylon) D6.1x10x1T	
7-21	ZW270123	'E' Ring 4M	6-1-9
7-22	SP311718	Rear Panel (U) (U/T)	PC-2014
7-23x	SP311719	Rear Panel (A) (CSA)	PC-2014
7-24x	SP311720	Rear Panel (E) (CEE)	PC-2015
7-25x	SP311721	Rear Panel (B) (UK)	PC-2015
7-26x	ZW312470	Nut, M9	25-6-164
7-27x	ZW312471	Washer D9	25-6-164
7-28x	ZW312472	Nut, M9	25-6-165
7-29x	ZW312473	Washer D9	25-6-165
7-30x	ZS522865	Tapping Screw, #2, 3x12 (BR) (Black)	
7-31	ZS608185	Screw, Pan 2.6x4	
7-32	EZ225145	⚠ 2-Throw AC Outlet (U/T, CSA)	31-1-166
7-33x	EJ296853	⚠ 3P In-let CM-3 (CEE, UK)	31-1-199
7-34x	ZS463353	Tapping Screw, #2, 3x8 (BR) (Black)	
7-35x	EC301320	⚠ MP/C. 4700PF(M) 250WV (CEE, UK)	24-9-122
7-36x	EC286198	⚠ Ceramic/C. AL-10 0.01μF(Z) 125WV (CSA)	24-5-69
7-37x	EC301320	⚠ MP/C. 4700PF(M) 250WV (CEE, UK)	24-9-122
7-38	EC283375	⚠ MP/C 0.047μF(M) 250WV (U/T)	24-9-118
7-39	EJ311812	Earth Terminal	32-1-97
7-40x	EC427228	Ceramic/C. DD111FZ 0.047μF(Z) 50WV	24-5-65
7-41x	EC427228	Ceramic/C. DD111FZ 0.047μF(Z) 50WV	24-5-65
7-42x	EC427228	Ceramic/C. DD111FZ 0.047μF(Z) 50WV	24-5-65
7-43	EW311816	⚠ Power Cord 125V 13A (U/T, CSA)	26-3-75
7-44	EZ631945	Strain Relief SR-4N-4 (U/T, CSA)	2-7-49
7-45	EF309388	⚠ Fuse 800MA 250V (U/T)	39-1-64
7-46	EF306125	⚠ Fuse 315MA 250V (U/T)	39-1-64
7-47x	EF309391	⚠ Fuse 800MA 125V (CSA)	39-1-65
7-48x	EF306088	⚠ Fuse 315MA 125V (CSA)	39-1-65
7-49x	EF300598	⚠ Fuse (FST) 315MAT (CEE, UK)	39-1-61
7-50x	EF300596	⚠ Fuse (FST) 200MAT (CEE, UK)	39-1-61

Ref. No.	Parts No.	Description	Schematic No.
		FINAL ASSEMBLY BLOCK	
7-51x	ZS311746	Tapping Screw, #2, 3x8 (Oval Neck)	7-1-69
7-52	SP311722	Bottom Plate	PC-2016
7-53	SA311742	Circular Foot	PC-2032
7-54	ZS311747	Tapping Screw, #2, Pan 4x8 (Black)	

When ordering parts, please describe Parts Number, Description, and Model Number in detail.

8. FINAL ASSEMBLY BLOCK

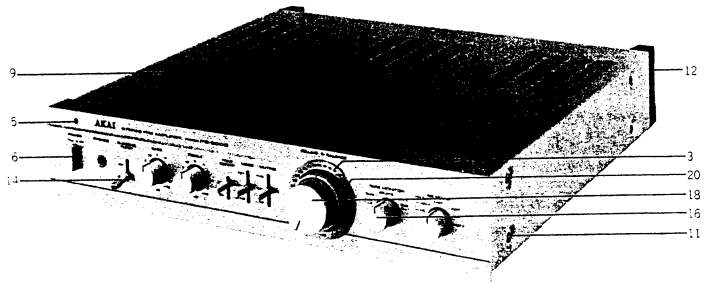

8. FINAL ASSEMBLY BLOCK

Ref. No.	Parts No.	Description	Schematic No.
		FRONT PANEL BLOCK	
8-1	BD313972	Front Panel Block Comp. PS-200C (New Type)	
8-2x	BD313973	Front Panel Block Comp. PS-200C-BL (New Type)	
8-3	TA311726	Memory Plate	PC-2019/2020
8-4x	TA311727	Memory Plate (BL)	PC-2019/2020
8-5	SE311728	Power Lens	PC-2021
8-6	SB312474	Button	PC-2042
8-7x	SB312475	Button (BL)	PC-2042
8-8x	ZG312478	Spring	PC-2045
		FINAL ASSEMBLY BLOCK	
8-9	BC311730	Case	PC-2023
8-10x	BC312352	Case (BL)	PC-2023
8-11	ZS537006	Screw, Bind 4x8 (Black)	
8-12	SA311714	Foot	PC-2029
8-13x	ZS411232	Screw, Bind 4x8	
8-14	ML311733	Lever (B)	PC-2025
8-15x	ML311734	Lever (B-BL)	PC-2025
8-16	SK311735	Knob	PC-2026
8-17x	SK311736	Knob (BL)	PC-2026
8-18	SK311737	Double Knob (Upper)	PC-2027
8-19x	SK311738	Double Knob (Upper-BL)	PC-2027
8-20	SK311739	Double Knob (Lower)	PC-2028
8-21x	SK311740	Double Knob (Lower-BL)	PC-2028

When ordering parts, please describe Parts Number, Description, and Model Number in detail.

II. MODEL PS-120M

1. RECOMMENDED SPARE PARTS LIST

Because, if the parts listed below are on hand, almost any repair can be accomplished, we suggest that you stock these Recommended Spare Parts Items.

Parts No.	Description	Note
BA311438	Filter P.C Board Comp. PS-120M	
BA311432	Main Amp P.C Board (L) Comp. PS-120M	
BA311436	Main Amp P.C Board (R) Comp. PS-120M	
BA311440	Meter P.C Board Comp. PS-120M	
BT311862	⚠ Power Trans. PS-120MT-30	(CSA)
BT311860	⚠ Power Trans. PS-120MT-40	(CEE, UK)
BT311859	⚠ Power Trans. PS-120MT-70	(U/T)
EC311688	Elect./C. 10000μF 71WV	
ED311794	LED SY405T	
ED311857	LED TLR114	
ED300924	Silicon Diode GP08D	
ED311849	Silicon Diode SS-3A	
ED311851	Silicon Diode SS-3AR	
ED311852	Silicon Diode 1S2471	
ED624903	Silicon Diode 1S2473	
ED490511	Varistor VD1222	
ED311854	Zener Diode RD-11E (C)	
ED311752	Zener Diode RD-22E (C)	
ED311864	Zener Diode RD-3.3E (C)	
ED311853	Zener Diode RD-6.2E (C)	
EF303348	⚠ Fuse ST-6 6.3A	(CSA)
EF308847	⚠ Fuse 1.6A 125V	(CSA)
EF311839	⚠ Fuse 1.6A 250V	(U/T)
EF305703	⚠ Fuse 630mA 125V	(CSA)
EF306124	⚠ Fuse 630mA 250V	(U/T)
EF300577	⚠ Fuse (EAK) 5AT	(CEE, UK)
EF623103	⚠ Fuse (SEMKO T) 1AT	(CEE, UK)
EF691007	⚠ Fuse (SEMKO T) 3.15AT	(U/T)
EF668474	⚠ Fuse (SEMKO T) 400mAT	(CEE, UK)
EF242605	⚠ Fuse (SEMKO T) 6.3AT	(U/T)
EI311855	IC LB1405	
EI308865	IC TA7318P	
EL311833	Lamp (Cord Type) 8V 300mA (200mmx2)	
EM311863	Meter KL-65L-100	
EP311858	Relay MSJ48D2-0Z	
ES311805	⚠ Lever SW. SY02-2 (U85DMU, C)	(U/T, CSA)
ES311806	⚠ Lever SW. V85DV	(CEE, UK)
ES311690	Push SW. J-K2014	
ET302465	FET 2SK117 (SPECIAL)	
ET311792	FET 2SK150 (GR) (Y)	
ET557965	Transistor 2SA733 (Q) (R)	

Parts No.	Description	Note
ET311845	Transistor 2SA899 (B) (V)	
ET311844	Transistor 2SA949 (O) (Y) AKAI	
ET311791	Transistor 2SA968 (O) (Y)	
ET305463	Transistor 2SA970 (GR) (BL)	
ET311847	Transistor 2SB681 (O) (R) AKAI	
ET311865	Transistor 2SC1904 (B) (V)	
ET312485	Transistor 2SC2229 (O) (Y) AKAI	
ET311790	Transistor 2SC2238 (O) (Y)	
ET307195	Transistor 2SC2240 (GR) (BL)	
ET635220	Transistor 2SC945L (K) (P)	
ET311846	Transistor 2SD551 (O) (R) AKAI	
ET300931	Transistor 2SD600K (E) (F)	
EV310077	Semi-Fixed/Vol. (Solid) CR29R 1KB	
EV311836	Semi-Fixed/Vol. (Solid) CR29R 10KB	
EV311838	Semi-Fixed/Vol. (Solid) CR29R 220 ohms (B)	
EV311834	Vol. V24L52PHN25KC 100KB	
EV311835	Semi-Fixed/Vol. (Solid) CR29R 2.2KB	

2. MAIN AMP P.C BOARD (L) (PM-1201/1201S) BLOCK

Symbol No.	Parts No.	Description	Schematic No.
2-1	BA311432	Main Amp P.C Board(L) Comp. PS-120M	PM-1201
2-TR1,2	ET302465	FET 2SK117(SPECIAL)	45-12-16
2-TR3	ET311792	FET 2SK150(GR)(Y)	45-12-22
2-TR4to7	ET307195	Transistor 2SC2240(GR)(BL)	45-1-302
2-TR8,9	ET305463	Transistor 2SA970(GR)(BL)	45-1-303
2-TR10	ET311845	Transistor 2SA899(B)(V)	45-1-341
2-TR11	ET311865	Transistor 2SC1904(B)(V)	45-1-342
2-TR13to15	ET635220	Transistor 2SC945L(K)(P)	45-1-85
2-TR16,17	ET557965	Transistor 2SA733(Q)(R)	45-1-124
2-TR18	ET635220	Transistor 2SC945L(K)(P)	45-1-85
2-TR19	ET312485	Transistor 2SC2229(O)(Y) AKAI	45-1-349
2-TR20	ET311844	Transistor 2SA949(O)(Y) AKAI	45-1-340
2-TR21	ET311790	Transistor 2SC2238(O)(Y)	45-1-339
2-TR22	ET311791	Transistor 2SA968(O)(Y)	45-1-338
2-TR23	ET305463	Transistor 2SA970(GR)(BL)	45-1-303
2-TR24,25	ET307195	Transistor 2SC2240(GR)(BL)	45-1-302
2-TR26	ET305463	Transistor 2SA970(GR)(BL)	45-1-303
2-TR27	ET307195	Transistor 2SC2240(GR)(BL)	45-1-302
2-TR28	ET305463	Transistor 2SA970(GR)(BL)	45-1-303
2-TR29	ET311790	Transistor 2SC2238(O)(Y)	45-1-339
2-TR30	ET311791	Transistor 2SA968(O)(Y)	45-1-338
2-D1,2	ED624903	Silicon Diode 1S2473	45-3-28
2-D4to7	ED311852	Silicon Diode 1S2471	45-3-52
2-D8,9	ED624903	Silicon Diode 1S2473	45-3-28
2-D10,11	ED311852	Silicon Diode 1S2471	45-3-52
2-D12to15	ED311864	Zener Diode RD-3.3E(C)	45-6-72
2-D16	ED311849	Silicon Diode SS-3A	45-2-87
2-D17	ED311851	Silicon Diode SS-3AR	45-2-88
2-D18to21	ED300924	Silicon Diode GP08D	45-2-68
2-D23,24	ED311752	Zener Diode RD-22E(C)	45-6-72
2-D25,26	ED490511	Varistor VD1222	45-10-7
2-L1	EO551711	Phase Compensation Coil 2.2μH (±30%)	23-1-188
2-VR1	EV311838	Semi-Fixed/Vol. (Solid) CR29R 220 ohms (B)	36-28-6
2-VR2	EV310077	Semi-Fixed/Vol. (Solid) CR29R 1KB	36-28-6
2-VR3,4	EV311836	Semi-Fixed/Vol. (Solid) CR29R 10KB	36-28-6
2-P2	EJ311841	Micro Connector W-P1302	42-1-154
2-P4	EJ311841	Micro Connector W-P1302	42-1-154
2-P6	EJ207854	3P Plug. PC	42-1-96
2-P8	EJ311843	Micro Connector W-P1305	42-1-154
2-P9	EJ311841	Micro Connector W-P1302	42-1-154
2-P11	EJ699355	6P Plug, PC	42-1-95
2-P13	EJ699355	6P Plug, PC	42-1-95
2-P15	EJ311840	2P Plug W-P3002	42-1-152
2-P17	EJ207854	3P Plug, PC	42-1-96
2-P21	EJ311842	Micro Connector W-P1303	42-1-154
2-R1	ER311751	Metal Film/R. 1/4W 100 ohms (F)	35-17-12
2-R2	ER311672	Metal Film/R. 1/4W 150K (F)	35-17-12
2-R5,6	ER311757	Metal Film/R. 1/4W 4.7K (F)	35-17-12
2-R7,8	ER311671	Metal Film/R. 1/4W 180 ohms (F)	35-17-12
2-R9,10	ER312324	Metal Film/R. 1/4W 68 ohms (F)	35-17-12
2-R16,17	ER311668	Carbon/R. F 1/4W 1.8K (J)	35-11-25
2-R18,19	ER311663	Carbon/R. F 1/4W 68 ohms (J)	35-11-25
2-R21	ER311668	Carbon/R. F 1/4W 1.8K (J)	35-11-25
2-R22	ER311664	Carbon/R. F 1/4W 270 ohms (J)	35-11-25
2-R23	ER311668	Carbon/R. F 1/4W 1.8K (J)	35-11-25
2-R25	ER311668	Carbon/R. F 1/4W 1.8K (J)	35-11-25
2-R27	ER311667	Carbon/R. F 1/4W 1K (J)	35-11-25
2-R28	ER311664	Carbon/R. F 1/4W 270 ohms (J)	35-11-25
2-R29	ER307196	Carbon/R. F 1/4W 100 ohms (J)	35-11-25
2-R32,33	ER307196	Carbon/R. F 1/4W 100 ohms (J)	35-11-25
2-R35	ER311667	Carbon/R. F 1/4W 1K (J)	35-11-25
2-R37	ER311667	Carbon/R. F 1/4W 1K (J)	35-11-25
2-R38,39	ER311683	Metal Oxide Film/R. 3W 3.3K (K)	35-15-9
2-R40,41	ER308849	Carbon/R. F 1/4W 220 ohms (J)	35-11-25
2-R42,43	ER310843	Carbon/R. F 1/4W 680 ohms (J)	35-11-25
2-R47to50	ER311669	Carbon/R. F 1/4W 3.3K (J)	35-11-25
2-R51,52	ER311662	Carbon/R. F 1/4W 22 ohms (J)	35-11-25
2-R53,54	ER310147	Carbon/R. F 1/4W 10 ohms (J)	35-11-25
2-R55,56	ER311667	Carbon/R. F 1/4W 1K (J)	35-11-25
2-R57,58	ER439132	Metal Oxide Film/R. 2W 150 ohms (K)	35-15-8
2-R59to62	ER622978	Metal Plate/R. MPC71F1 5W 0.47 ohms (K)	35-16-48
2-R67,68	ER312486	Metal Oxide Film/R. 2W 4.7 ohms (K)	35-15-18
2-R69,70	ER380856	Metal Oxide Film/R. 2W 10 ohms (K)	35-15-8
2-R71,72	ER311665	Carbon/R. F 1/4W 560 ohms (J)	35-11-25
2-R75,76	ER311673	Metal Oxide Film/R. 2W 3.3K (K)	35-15-8
2-R81,82	ER308875	Carbon/R. F 1/2W 10 ohms (J)	35-11-27
2-R83,84	ER312487	Metal Oxide Film/R. 2W 2.2K (K)	35-15-8
2-2	ZS463353	Tapping Screw, #2, 3×8 (BR) (Black)	

When ordering parts. please describe Parts Number, Description, and Model Number in detail.

3. MAIN AMP P.C BOARD (R) (PM-1202/1202S) BLOCK

Symbol No.	Parts No.	Description	Schematic No.
3-1	BA311436	Main Amp P.C Board (R) Comp. PS-120M	PM-1202
3-TR1,2	ET302465	FET 2SK117 (SPECIAL)	45-12-16
3-TR3	ET311792	FET 2SK150 (GR) (Y)	45-12-22
3-TR4to7	ET307195	Transistor 2SC2240 (GR) (BL)	45-1-302
3-TR8,9	ET305463	Transistor 2SA970 (GR) (BL)	45-1-303
3-TR10	ET311845	Transistor 2SA899(B)(V)	45-1-341
3-TR11	ET311865	Transistor 2SC1904(B)(V)	45-1-342
3-TR13to15	ET635220	Transistor 2SC945L(K)(P)	45-1-85
3-TR16,17	ET557965	Transistor 2SA733(Q)(R)	45-1-124
3-TR18	ET635220	Transistor 2SC945L(K)(P)	45-1-85
3-TR19	ET312485	Transistor 2SC2229(O)(Y) AKAI	45-1-349
3-TR20	ET311844	Transistor 2SA949(O)(Y) AKAI	45-1-340
3-TR21	ET311790	Transistor 2SC2238(O)(Y)	45-1-339
3-TR22	ET311791	Transistor 2SA968(O)(Y)	45-1-338
3-TR23	ET305463	Transistor 2SA970 (GR) (BL)	45-1-303
3-TR24,25	ET307195	Transistor 2SC2240 (GR) (BL)	45-1-302
3-TR26	ET305463	Transistor 2SA970 (GR) (BL)	45-1-303
3-TR27	ET307195	Transistor 2SC2240 (GR) (BL)	45-1-302
3-TR28	ET305463	Transistor 2SA970 (GR) (BL)	45-1-303
3-TR29	ET311790	Transistor 2SC2238(O)(Y)	45-1-339
3-TR30	ET311791	Transistor 2SA968(O)(Y)	45-1-338
3-TR31	ET557965	Transistor 2SA733(Q)(R)	45-1-124
3-TR32to34	ET635220	Transistor 2SC945L(K)(P)	45-1-85
3-TR35	ET300931	Transistor 2SD600K(E)(F)	45-1-278
3-TR36	ET307195	Transistor 2SC2240 (GR) (BL)	45-1-302
3-D1,2	ED624903	Silicon Diode 1S2473	45-3-28
3-D4to7	ED311852	Silicon Diode 1S2471	45-3-52
3-D8,9	ED624903	Silicon Diode 1S2473	45-3-28
3-D10,11	ED311852	Silicon Diode 1S2471	45-3-52
3-TR12to15	ED311864	Zener Diode RD-3.3E (C)	45-6-72
3-D16	ED311849	Silicon Diode SS-3A	45-2-87
3-D17	ED311851	Silicon Diode SS-3AR	45-2-88
3-D18to22	ED300924	Silicon Diode GP08D	45-2-68
3-D23,24	ED311752	Zener Diode RD-22E (C)	45-6-72
3-D25,26	ED490511	Varistor VD1222	45-10-7
3-D29	ED311854	Zener Diode RD-11E (C)	45-6-72
3-L1	EO551711	Phase Compensation Coil 2.2μH (±30%)	23-1-188
3-VR1	EV311838	Semi-Fixed/Vol. (Solid) CR29R 220 ohms (B)	36-28-6
3-VR2	EV310077	Semi-Fixed/Vol. (Solid) CR29R 1KB	36-28-6
3-VR3,4	EV311836	Semi-Fixed/Vol. (Solid) CR29R 10KB	36-28-6
3-RL1	EP311858	Relay MSJ48D2-0Z	47-1-38
3-P1	EJ311841	Micro Connector W-P1302	42-1-154
3-P3	EJ311841	Micro Connector W-P1302	42-1-154
3-P5	EJ207854	3P Plug, PC	42-1-96
3-P7	EJ311843	Micro Connector W-P1305	42-1-154
3-P10	EJ699355	6P Plug, PC	42-1-95
3-P12	EJ699355	6P Plug, PC	42-1-95
3-P14	EJ311840	2P Plug, W-P3002	42-1-152
3-P16	EJ207854	3P Plug, PC	42-1-96
3-P18,19	EJ311841	Micro Connector W-P1302	42-1-154
3-P20	EJ311842	Micro Connector W-P1303	42-1-154
3-C41	EC311689	NP/C. 330μF (M) 6.3WV	24-17-31
3-C44	EC662128	Solid Aluminum/C. (Vert.) 2.2μF (M) 25WV	24-19-2
3-R1	ER311751	Metal Film/R. 1/4W 100 ohms (F)	35-17-12
3-R2	ER311672	Metal Film/R. 1/4W 150K (F)	35-17-12
3-R5,6	ER311757	Metal Film/R. 1/4W 4.7K (F)	35-17-12
3-R7,8	ER311671	Metal Film/R. 1/4W 180 ohms (F)	35-17-12
3-R9,10	ER312324	Metal Film/R. 1/4W 68 ohms (F)	35-17-12
3-R16,17	ER311668	Carbon/R. F 1/4W 1.8K (J)	35-11-25
3-R18,19	ER311663	Carbon/R. F 1/4W 68 ohms (J)	35-11-25
3-R21	ER311668	Carbon/R. F 1/4W 1.8K (J)	35-11-25
3-R22	ER311664	Carbon/R. F 1/4W 270 ohms (J)	35-11-25
3-R23	ER311668	Carbon/R. F 1/4W 1.8K (J)	35-11-25
3-R25	ER311668	Carbon/R. F 1/4W 1.8K (J)	35-11-25
3-R27	ER311667	Carbon/R. F 1/4W 1K (J)	35-11-25
3-R28	ER311664	Carbon/R. F 1/4W 270 ohms (J)	35-11-25
3-R29	ER307196	Carbon/R. F 1/4W 100 ohms (J)	35-11-25
3-R32,33	ER307196	Carbon/R. F 1/4W 100 ohms (J)	35-11-25
3-R35	ER311667	Carbon/R. F 1/4W 1K (J)	35-11-25
3-R37	ER311667	Carbon/R. F 1/4W 1K (J)	35-11-25
3-R38,39	ER311683	Metal Oxide Film/R. 3W 3.3K (K)	35-15-9
3-R40,41	ER308849	Carbon/R. F 1/4W 220 ohms (J)	35-11-25
3-R42,43	ER310843	Carbon/R. F 1/4W 680 ohms (J)	35-11-25
3-R47to50	ER311669	Carbon/R. F 1/4W 3.3K (J)	35-11-25
3-R51,52	ER311662	Carbon/R. F 1/4W 22 ohms (J)	35-11-25
3-R53,54	ER310147	Carbon/R. F 1/4W 10 ohms (J)	35-11-25
3-R55,56	ER311667	Carbon/R. F 1/4W 1K (J)	35-11-25
3-R57,58	ER439132	Metal Oxide Film/R. 2W 150 ohms (K)	35-15-8
3-R59to62	ER622978	Metal Plate/R. MPC71F1 5W 0.47 ohms (K)	35-16-48
3-R67,68	ER312486	Metal Oxide Film/R. 2W 4.7 ohms (K)	35-15-18
3-R69,70	ER380856	Metal Oxide Film/R. 2W 10 ohms (K)	35-15-8
3-R71,72	ER311665	Carbon/R. F 1/4W 560 ohms (J)	35-11-25
3-R75,76	ER311673	Metal Oxide Film/R. 2W 3.3K (K)	35-15-8
3-R89	ER311662	Carbon/R. F 1/4W 22 ohms (J)	35-11-25
3-R95	ER309092	Metal Oxide Film/R. 2W 820 ohms (K)	35-15-8
3-R102,103	ER308875	Carbon/R. F 1/2W 10 ohms (J)	35-11-27
3-2	ZS463353	Tapping Screw, #2, 3x8 (BR) (Black)	

When ordering parts, please describe Parts Number, Description, and Model Number in detail.

4. FILTER P.C BOARD (PM-1203/1203S) BLOCK

Symbol No.	Parts No.	Description	Schematic No.
4-1	BA311438	Filter P.C Board Comp. PS-120M	PM-1203
4-TR1	ET307195	Transistor 2SC2240 (GR) (BL)	45-1-302
4-TR2,3	ET305463	Transistor 2SA970 (GR) (BL)	45-1-303
4-TR4	ET307195	Transistor 2SC2240 (GR) (BL)	45-1-302
4-VR1	EV311834	Vol. V24L52PHN25KC 100KB	36-2-44
4-SW1	ES311690	Push SW. J-K2014	25-5-312
4-C2	EC311779	NP/C. 2.2μF 50WV	24-17-33
4-2	ZS608477	Screw, Pan 3x4	

5. METER P.C BOARD (PM-1204/1204S) BLOCK

Symbol No.	Parts No.	Description	Schematic No.
5-1	BA311440	Meter P.C Board Comp. PS-120M	PM-1204
5-IC1	EI308865	IC TA7318P	45-8-306
5-IC2	EI311855	IC LB1405	45-8-328
5-TR1	ET311791	Transistor 2SA968(O)(Y)	45-1-338
5-TR2	ET557965	Transistor 2SA733(Q)(R)	45-1-124
5-TR3,4	ET307195	Transistor 2SC2240 (GR) (BL)	45-1-302
5-D1,2	ED300924	Silicon Diode GP08D	45-2-68
5-D3	ED311853	Zener Diode RD-6.2E (C)	45-6-72
5-D4	ED624903	Silicon Diode 1S2473	45-3-28
5-VR1	EV310077	Semi-Fixed/Vol. (Solid) CR29R 1KB	36-28-6
5-VR2	EV311835	Semi-Fixed/Vol. (Solid) CR29R 2.2KB	36-28-6
5-R1,2	ER312483	Metal Oxide Film/R. 2W 1.2K (K)	35-15-8
5-FR1	ER293635	Fuse/R. FRN158 1/4W 10 ohms (J) 700mA	35-14-20

When ordering parts, please describe Parts Number, Description, and Model Number in detail.

6. ASSEMBLY BLOCK

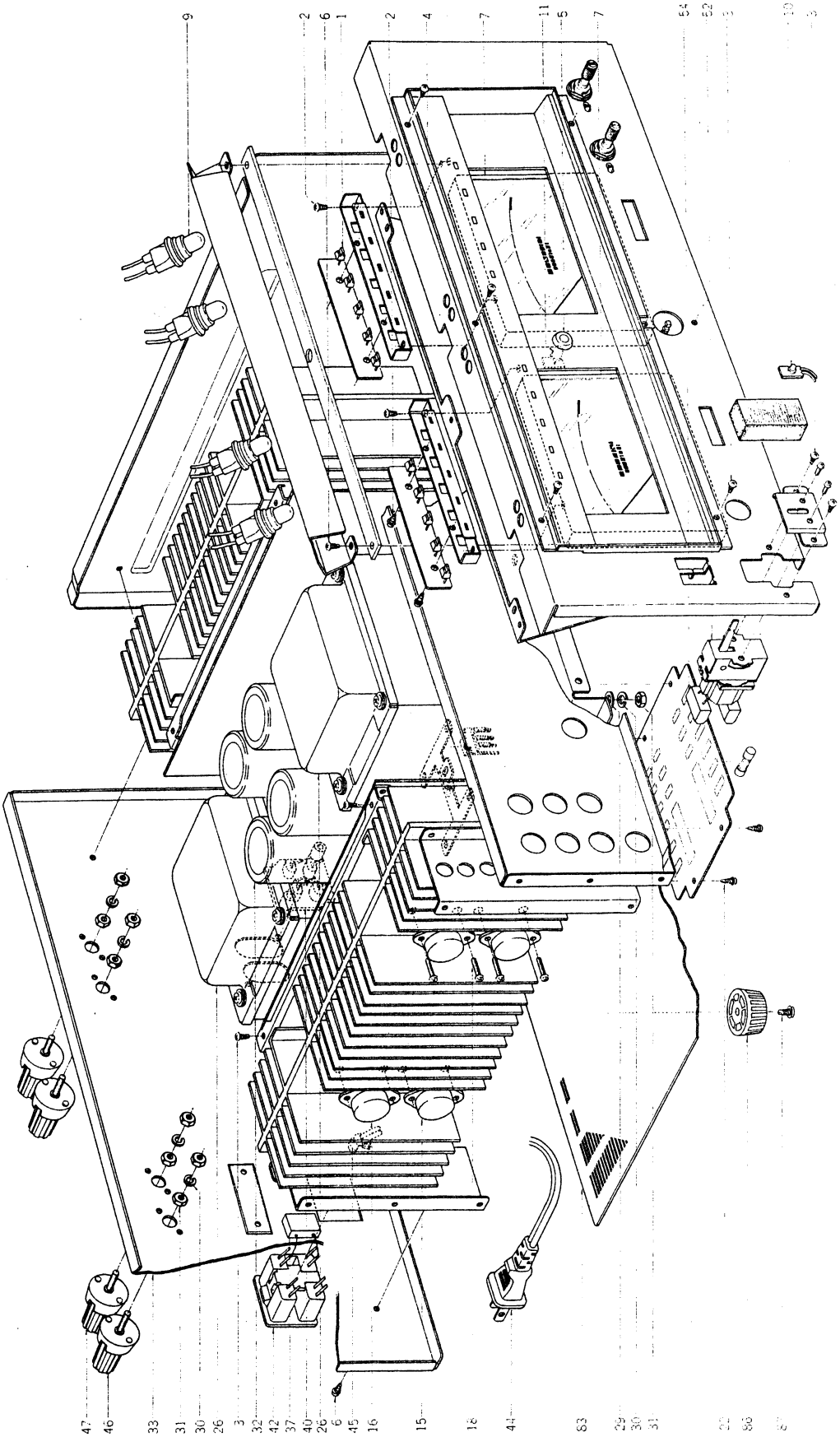

6. ASSEMBLY BLOCK

Ref. No.	Parts No.	Description	Schematic No.
		LED P.C BOARD (A) BLOCK	
6-1	ED311856	LED SLP137B	45-15-23
6-2	ZS447761	Tapping Screw, #2, 3x6 (BR) (Black)	
		FRONT CHASSIS BLOCK	
6-3	ZS308846	Tapping Screw, #2, 3x8 (BR) (Oval Neck)	7-1-69
6-4	ML311629	Meter Plate	PM-1218/1219
6-5	MH311627	Collar	PM-1217
6-6	ZS463353	Tapping Screw, #2, 3x8 (BR) (Black)	
6-7	EM311863	Meter KL-65L-100	46-2-23
6-8x	ZS355522	Screw, Pan 3x6 (Black)	
6-9	EL311833	Lamp (Cord Type) 8V 300mA (200mmx2)	28-2-71
		LED P.C BOARD (B) BLOCK	
6-10	ED311794	LED SY405T (Power)	45-15-24
6-11	ED311857	LED TLR114 (Protection)	45-15-25
6-12x	EJ313596	Micro Connector Assy C1205 (J18)	26-6-318
		TEMP. COMPENSATION P.C BOARD BLOCK	
6-13x	ET635220	Transistor 2SC945L(K)(P) (TR1)	45-1-85
6-14x	EJ313599	Micro Connector Assy C2208 (J20, 21)	26-6329
		HEAT SINK BLOCK	
6-15	ET311847	Transistor 2SB681 (O)(R) AKAI	45-1-344
6-16	ET311846	Transistor 2SD551 (O)(R) AKAI	45-1-343
6-17x	EJ624486	Power TR. Socket	31-1-97
6-18	ZS344338	Screw, Pan 3x12	
6-19x	EJ313603	Mini Connector Assy C1103 (J10, 11)	26-6-325
6-20x	EJ313605	Mini Connector Assy C1105 (J13)	26-6-327
6-21x	EJ313604	Mini Connector Assy C1104 (J12)	26-6-326
		ASSEMBLY BLOCK	
6-22	ZS311745	Tapping Screw, #2, 3x8 (BR) W=8 (Black)	
6-23x	ZW668621	M4 Spring Washer (Black)	
6-24x	ZS608477	Screw, Pan 3x4	
6-25x	ZS201778	Screw, Pan 4x8	
6-26	BT311859	⚠ Power Trans. PS-120MT-70 (U/T)	38-4-688
6-27x	BT311862	⚠ Power Trans. PS-120MT-30 (CSA)	38-4-690
6-28x	BT311860	⚠ Power Trans. PS-120MT-40 (CEE, UK)	38-4-689
6-29	ZW237857	Washer D4.1x10x1T	
6-30	ZW273914	Spring Washer, M4	
6-31	ZW413188	Nut, #1, M4	
6-32	EC311688	Elect./C. 10000μF 71WV	24-10-130
6-33	SP311640	Rear Panel (U-1) (U/T)	PM-1229
6-34x	SP311641	Rear Panel (A-1) (CSA)	PM-1230
6-35x	SP311642	Rear Panel (E-1) (CEE)	PM-1232
6-36x	SP311643	Rear Panel (B-1) (UK)	PM-1233
6-37	EC283375	⚠ MP/C. 0.047μF(M) 250WV (U/T)	24-9-118
6-38x	EC308528	⚠ Oil Paper/C. ECN-C4A 0.047μF(M) 450WV (CEE,UK)	24-8-6
6-39x	EC286198	⚠ Ceramic/C. AL-10 0.01μF(Z) 125WV (CSA)	23-5-69
6-40	EJ312482	4P Pin Jack	31-5-149
6-41x	ZS522865	Tapping Screw, #2, 3x12 (BR) (Black)	
6-42	EZ225145	⚠ 2-Throw AC Outlet (U/T, CSA)	31-1-166
6-43x	EJ296853	⚠ 3P In-let CM-3 (CEE, UK)	31-1-199
6-44	EW311816	⚠ Power Cord 125V 13A (U/T, CSA)	26-3-75

Ref. No.	Parts No.	Description	Schematic No.
6-45	EZ631945	Strain Relief SR-4N-4	2-7-49
6-46	EJ311695	Terminal T5689-A	32-1-99
6-47	EJ311696	Terminal T5689-B	32-1-102
6-48x	EC308528	Oil Paper/C. ECN-C4A 0.047μF (M) 450WV (CEE, UK)	24-8-6
6-49x	EC286198	Ceramic/C. AL-10 0.01μF (Z) 125WV (CSA)	24-5-69
6-50x	ZS608477	Screw, Pan 3x4	
6-51x	ZS312349	Screw, Pan 4x8	46-2-23
6-52	ES311805	⚠ Lever SW. SY02-2 (U85DMU, C) (U/T, CSA)	25-12-48
6-53x	ES311806	⚠ Lever SW. V85DV (CEE, UK)	25-12-50
6-54	EC283375	⚠ MP/C 0.047μF (M) 250WV (U/T)	24-9-118
6-55x	EC308528	⚠ Oil Paper/C. ECN-C4A 0.047μF (M) 450WV (CEE, UK)	24-8-6
6-56x	EC286198	⚠ Ceramic/C. AL-10 0.01μF (Z) 125WV (CSA)	24-5-69
6-57x	EJ314568	Fuse Holder	40-2-15
6-58x	EF242605	⚠ Fuse (SEMKO T) 6.3AT (UK)	39-1-53
6-59x	EF306124	⚠ Fuse 630mA 250V (U/T)	39-1-64
6-60x	EF311839	⚠ Fuse 1.6A 250V (U/T)	39-1-64
6-61x	EF691007	⚠ Fuse (SEMKO T) 3.15AT (U/T)	39-1-53
6-62x	EF303348	⚠ Fuse ST-6 6.3A (CSA)	39-1-63
6-63x	EF305703	⚠ Fuse 630mA 125V (CSA)	39-1-65
6-64x	EF308847	⚠ Fuse 1.6A 125V (CSA)	39-1-65
6-65x	EF300577	⚠ Fuse (EAK) 5AT (CEE, UK)	39-1-59
6-66x	EF668474	⚠ Fuse (SEMKO T) 400mAT (CEE, UK)	39-1-53
6-67x	EF623103	⚠ Fuse (SEMKO T) 1AT (CEE, UK)	39-1-53
6-68x	EJ313598	Micro Connector Assy C1207(J1)	26-6-320
6-69x	EJ313597	Micro Connector Assy C1206(J2)	26-6-319
6-70x	EJ313591	Micro Connector Assy C1201(J3)	26-6-314
6-71x	EJ313592	Micro Connector Assy C1202(J4)	26-6-315
6-72x	EJ313602	Mini Connector Assy C1102(J5,6)	26-6-324
6-73x	EJ313600	Micro Connector Assy C1209(J7,8)	26-6-322
6-74x	EJ313594	Micro Connector Assy C1203(J9)	26-6-316
6-75x	EJ313601	Mini Connector Assy C1101	26-6-323
6-76x	EJ313606	Mini Connector Assy C1106	26-6-328
6-77x	EJ313595	Micro Connector Assy C1204	26-6-317
6-78x	EW313609	Wire (A) Assy (320mm)	26-1-9
6-79x	EW313610	Wire (B) Assy (180mm)	26-1-10
6-80x	EW313611	Wire (C) Assy (230mm)	26-1-11
6-81x	EW313612	Wire (D) Assy (280mm)	26-1-12
6-82x	ZS311746	Tapping Screw, #2, 3x8 (Countersunk) (Black)	PM-1234
6-83	SP311644	Bottom Plate	
6-84x	ZW668621	M4 Spring Washer (Black)	
6-85x	ZS537006	Screw, Bind 4x8 (Black)	CA-6014
6-86	SA312465	Circular Foot (A) Part CA	
6-87	ZS311747	Tapping Screw, #2, 4x8 (Pan) (Black)	24-9-118
6-88x	EC283375	MP/C 0.047μF(M) 250WV (U/T)	

When ordering parts, please describe Parts Number, Description, and Model Number in detail.

7. FINAL ASSEMBLY BLOCK

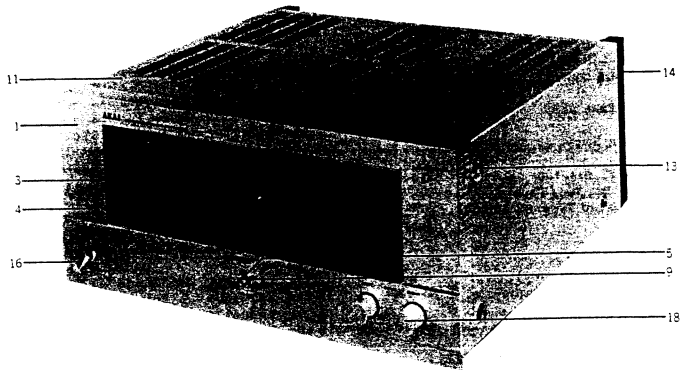

7. FINAL ASSEMBLY BLOCK

Ref. No.	Parts No.	Description	Schematic No.
7-1	BD311414	Front Panel Block Comp. PS-120M	
7-2x	BD311415	Front Panel Block Comp. PS-120M-BL	
7-3	SZ311647	Front Plate	PM-1237
7-4	SE311728	Power Lens	PC-2021
7-5	SE311652	Button Escutcheon	PM-1240
7-6x	ZG311653	Spring	PM-1241
7-7x	SB311650	Button	PM-1239
7-8x	SB311651	Button (BL)	PM-1239
7-9	SH311648	Cap	PM-1238
7-10x	SH311649	Cap (BL)	PM-1238
7-11	BC311654	Case	PM-1242
7-12x	BC312479	Case (BL)	PM-1242
7-13	ZS537006	Screw, Bind 4×8 (Black)	
7-14	SA311655	Foot	PM-1243
7-15x	ZS411232	Screw, Bind 4×10	
7-16	ML311731	Lever (A)	PC-2024
7-17x	ML311732	Lever (A-BL)	PC-2024
7-18	SK311735	Knob	PC-2026
7-19x	SK311736	Knob (BL)	PC-2026

When ordering parts, please describe Parts Number, Description, and Model Number in detail.

III. MODEL PS-200M

1. RECOMMENDED SPARE PARTS LIST

Because, if the parts listed below are on hand, almost any repair can be accomplished, we suggest that you stock these Recommended Spare Parts Items.

Parts No.	Description	Note
BA311438	Filter P.C Board Comp. PS-120M	
BA312154	Main Amp P.C Board (L) Comp. PS-200M	
BA312158	Main Amp P.C Board (R) Comp. PS-200M	
BA312162	Meter P.C Board Comp. PS-200M	
BT312422	⚠ Power Trans. PS-200MT-30	(CSA)
BT312424	⚠ Power Trans. PS-200MT-40	(CEE, UK)
BT312425	⚠ Power Trans. PS-200MT-70	(U/T)
EC312459	Elect./C. 10000μF 90WV	
ED311856	LED SLP137B	
ED311794	LED SY405T	
ED311857	LED TLR114	
ED300924	Silicon Diode GP08D	
ED312449	Silicon Diode SS-5A	
ED312450	Silicon Diode SS-5AR	
ED311852	Silicon Diode 1S2471	
ED624903	Silicon Diode 1S2473	
ED490511	Varistor VD1222	
ED313705	Zener Diode RD-20E (C)	
ED311752	Zener Diode RD-22E (C)	
ED311864	Zener Diode RD-3.3E (C)	
ED308467	Zener Diode RD-4.7E (C)	
ED311853	Zener Diode RD-6.2E (C)	
EF303348	⚠ Fuse ST-6 6.3A	(CSA)
EF308847	⚠ Fuse 1.6A 125V	(CSA)
EF311839	⚠ Fuse 1.6A 250V	(U/T)
EF309391	⚠ Fuse 800mA 125V	(CSA)
EF309388	⚠ Fuse 800mA 250V	(U/T)
EF300577	⚠ Fuse (EAK) 5AT	(CEE, UK)
EF623103	⚠ Fuse (SEMKO T) 1AT	(CEE, UK)
EF593706	⚠ Fuse (SEMKO T) 500mAT	(CEE, UK)
EF242605	⚠ Fuse (SEMKO T) 6.3AT	(U/T)
EI311855	IC LB1405	(U/T)
EI308865	IC TA7318P	
EL311833	Lamp (Cord Type) 8V 300mA (200mm×2)	
EM312444	Meter KL-90G-100	
EP311858	Relay MSJ48D2-0Z	
ES311805	⚠ Lever SW. SY02-2 (U85DMU, C)	SW901 (U/T, CSA)
ES311806	⚠ Lever SW. V85DV	SW901 (CEE, UK)
ES311690	Push SW. J-K2014	
ET302465	FET 2SK117 (SPECIAL)	
ET311792	FET 2SK150 (GR) (Y)	

Parts No.	Description	Note
ET557965	Transistor 2SA733 (Q) (R)	
ET311845	Transistor 2SA899 (B) (V)	
ET311844	Transistor 2SA949 (O) (Y) AKAI	
ET311791	Transistor 2SA968 (O) (Y)	
ET305463	Transistor 2SA970 (GR) (BL)	
ET312447	Transistor 2SB645 (O) (R)	
ET311865	Transistor 2SC1904 (B) (V)	
ET312485	Transistor 2SC2229 (O) (Y) AKAI	
ET311790	Transistor 2SC2238 (O) (Y)	
ET307195	Transistor 2SC2240 (GR) (BL)	
ET635220	Transistor 2SC945L (K) (P)	
ET300931	Transistor 2SD600K (E) (F)	
ET312446	Transistor 2SD665 (O) (R)	
EV310077	Semi-Fixed/Vol. (Solid) CR29R 1KB	
EV311836	Semi-Fixed/Vol. (Solid) CR29R 10KB	
EV311835	Semi-Fixed/Vol. (Solid) CR29R 2.2KB	
EV311838	Semi-Fixed/Vol. (Solid) CR29R 220 ohms (B)	
EV311834	Vol. V24L52PHN25KC 100KB	

2. MAIN AMP P.C BOARD (L)
(PM-1201/1201S) BLOCK

Symbol No.	Parts No.	Description	Schematic No.
2-1	BA312154	Main Amp P.C Board (L) Comp. PS-200M	PM-1201
2-TR1,2	ET302465	FET 2SK227 (SPECIAL)	45-12-16
2-TR3	ET311792	FET 2SK150(GR) (Y)	45-12-22
2-TR4to7	ET307195	Transistor 2SC2240 (GR) (BL)	45-1-302
2-TR8,9	ET305463	Transistor 2SA970 (GR) (BL)	45-1-303
2-TR10	ET311845	Transistor 2SA899(B)(V)	45-1-341
2-TR11	ET311865	Transistor 2SC1904(B)(V)	45-1-342
2-TR13to15	ET635220	Transistor 2SC945L(K)(P)	45-1-85
2-TR16,17	ET557965	Transistor 2SA733(Q)(R)	45-1-124
2-TR18	ET635220	Transistor 2SC945L(K)(P)	45-1-85
2-TR19	ET312485	Transistor 2SC2229(O)(Y) AKAI	45-1-349
2-TR20	ET311844	Transistor 2SA949(O)(Y) AKAI	45-1-340
2-TR21	ET311790	Transistor 2SC2238(O)(Y)	45-1-339
2-TR22	ET311791	Transistor 2SA968(O)(Y)	45-1-338
2-TR23	ET305463	Transistor 2SA970 (GR) (BL)	45-1-303
2-TR24,25	ET307195	Transistor 2SC2240 (GR) (BL)	45-1-302
2-TR26	ET305463	Transistor 2SA970 (GR) (BL)	45-1-303
2-TR27	ET307195	Transistor 2SC2240 (GR) (BL)	45-1-302
2-TR28	ET305463	Transistor 2SA970 (GR) (BL)	45-1-303
2-TR29	ET311790	Transistor 2SC2238(O)(Y)	45-1-339
2-TR30	ET311791	Transistor 2SA968(O)(Y)	45-1-338
2-D1,2	ED624903	Silicon Diode 1S2473	45-3-28
2-D3	ED311864	Zener Diode RD-3.3E(C)	45-6-72
2-D4to7	ED311852	Silicon Diode 1S2471	45-3-52
2-D8,9	ED624903	Silicon Diode 1S2473	45-3-28
2-D10,11	ED311852	Silicon Diode 1S2471	45-3-52
2-D12to15	ED311864	Zener Diode RD-3.3E(C)	45-6-72
2-D16	ED312449	Silicon Diode SS-5A	45-2-89
2-D17	ED312450	Silicon Diode SS-5AR	45-2-90
2-D18to21	ED300924	Silicon Diode GP08D	45-2-68
2-D23,24	ED311752	Zener Diode RD-22E(C)	45-6-72
2-D25to28	ED490511	Varistor VD1222	45-10-7
2-D29	ED308467	Zener Diode RD-4.7E(C)	45-6-72
2-L1	EO551711	Phase Compensation Coil 2.2μH (±30%)	23-1-188
2-VR1	EV311838	Semi-Fixed/Vol. (Solid) CR29R 220 ohms (B)	36-28-6
2-VR2	EV310077	Semi-Fixed/Vol. (Solid) CR29R 1KB	36-28-6
2-VR3,4	EV311836	Semi-Fixed/Vol. (Solid) CR29R 10KB	36-28-6
2-P2	EJ311841	Micro Connector W-P1302	42-1-154
2-P4	EJ311841	Micro Connector W-P1302	42-1-154
2-P6	EJ207854	3P Plug. PC	42-1-96
2-P8	EJ311843	Micro Connector W-P1305	42-1-154
2-P9	EJ311841	Micro Connector W-P1302	42-1-154
2-P11	EJ699355	6P Plug, PC	42-1-95
2-P13	EJ699355	6P Plug, PC	42-1-95
2-P15	EJ311840	2P Plug, W-P3002	42-1-152
2-P17	EJ207854	3P Plug, PC	42-1-96
2-P21	EJ311842	Micro Connector W-P1303	42-1-154
2-R1	ER311751	Metal Film/R. 1/4W 100 ohms (F)	35-17-12
2-R2	ER311672	Metal Film/R. 1/4W 150K (F)	35-17-12
2-R5,6	ER311757	Metal Film/R. 1/4W 4.7K (F)	35-17-12
2-R7,8	ER311671	Metal Film/R. 1/4W 180 ohms (F)	35-17-12
2-R9,10	ER312324	Metal Film/R. 1/4W 68 ohms (F)	35-17-12
2-R16,17	ER311668	Carbon/R. F 1/4W 1.8K(J)	35-11-25
2-R18,19	ER311663	Carbon/R. F 1/4W 68 ohms (J)	35-11-25
2-R21	ER311668	Carbon/R. F 1/4W 1.8K(J)	35-11-25
2-R22	ER311664	Carbon/R. F 1/4W 270 ohms (J)	35-11-25
2-R24,25	ER311668	Carbon/R. F 1/4W 1.8K(J)	35-11-25
2-R27	ER311667	Carbon/R. F 1/4W 1K (J)	35-11-25
2-R28	ER311664	Carbon/R. F 1/4W 270 ohms (J)	35-11-25
2-R29	ER307196	Carbon/R. F 1/4W 100 ohms (J)	35-11-25
2-R32,33	ER307196	Carbon/R. F 1/4W 100 ohms (J)	35-11-25
2-R35	ER311667	Carbon/R. F 1/4W 1K (J)	35-11-25
2-R37	ER311667	Carbon/R. F 1/4W 1K (J)	35-11-25
2-R38,39	ER312453	Metal Oxide Film/R. 3W 4.7K (J)	35-15-9
2-R40,41	ER308849	Carbon/R. F 1/4W 220 ohms (J)	35-11-25
2-R42,43	ER310843	Carbon/R. F 1/4W 680 ohms (J)	35-11-25
2-R47to50	ER311669	Carbon/R. F 1/4W 3.3K (J)	35-11-25
2-R51	ER308849	Carbon/R. F 1/4W 220 ohms (J)	35-11-25
2-R52	ER307196	Carbon/R. F 1/4W 100 ohms (J)	35-11-25
2-R53,54	ER675112	Carbon/R. F 1/2W 6.8 ohms (J)	35-11-13
2-R55,56	ER311667	Carbon/R. F 1/4W 1K (J)	35-11-25
2-R57,58	ER439132	Metal Oxide Film/R. 2W 150 ohms (K)	35-15-8
2-R59to66	ER312414	Metal Plate/R. MPC71F1 5W 1 ohm (K)	35-16-48
2-R67,68	ER312486	Metal Oxide Film/R. 2W 4.7 ohms (K)	35-15-18
2-R69,70	ER380856	Metal Oxide Film/R. 2W 10 ohms (K)	35-15-8
2-R71,72	ER311665	Carbon/R. F 1/4W 560 ohms (J)	35-11-25
2-R75,76	ER312451	Metal Oxide Film/R. 2W 4.7K (J)	35-15-8
2-R81,82	ER308875	Carbon/R. F 1/2W 10 ohms (J)	35-11-27
2-R83,84	ER313702	Metal Oxide Film/R. 2W 3.3K (J)	35-15-8
2-2	ZS463353	Tapping Screw, #2, 3x8 (BR) (Black)	

When ordering parts, please describe Parts Number, Description, and Model Number in detail.

3. MAIN AMP P.C BOARD (R) (PM-1202/1202S) BLOCK

Symbol No.	Parts No.	Description	Schematic No.
3-1	BA312158	Main Amp P.C Board (R) Comp. PS-200M	PM-1202
3-TR1,2	ET302465	FET 2SK117 (SPECIAL)	45-12-16
3-TR3	ET311792	FET 2SK150 (GR) (Y)	45-12-22
3-TR4to7	ET307195	Transistor 2SC2240 (GR) (BL)	45-1-302
3-TR8,9	ET305463	Transistor 2SA970 (GR) (BL)	45-1-303
3-TR10	ET311845	Transistor 2SA899(B)(V)	45-1-341
3-TR11	ET311865	Transistor 2SC1904(B)(V)	45-1-342
3-TR13to15	ET635220	Transistor 2SC945L(K)(P)	45-1-85
3-TR16,17	ET557965	Transistor 2SA733(Q)(R)	45-1-124
3-TR18	ET635220	Transistor 2SC945L(K)(P)	45-1-85
3-TR19	ET312485	Transistor 2SC2229(O)(Y) AKAI	45-1-349
3-TR20	ET311844	Transistor 2SA949(O)(Y) AKAI	45-1-340
3-TR21	ET311790	Transistor 2SC2238(O)(Y)	45-1-339
3-TR22	ET311791	Transistor 2SA968(O)(Y)	45-1-338
3-TR23	ET305463	Transistor 2SA970 (GR) (BL)	45-1-303
3-TR24,25	ET307195	Transistor 2SC2240 (GR) (BL)	45-1-302
3-TR26	ET305463	Transistor 2SA970 (GR) (BL)	45-2-303
3-TR27	ET307195	Transistor 2SC2240 (GR) (BL)	45-1-302
3-TR28	ET305463	Transistor 2SA970 (GR) (BL)	45-1-303
3-TR29	ET311790	Transistor 2SC2238(O)(Y)	45-1-339
3-TR30	ET311791	Transistor 2SA968(O)(Y)	45-1-338
3-TR31	ET557965	Transistor 2SA733(Q)(R)	45-1-124
3-TR32to34	ET635220	Transistor 2SC945L(K)(P)	45-1-85
3-TR35	ET300931	Transistor 2SD600K(E)(F)	45-1-278
3-TR36	ET307195	Transistor 2SC2240 (GR) (BL)	45-1-302
3-D1,2	ED624903	Silicon Diode 1S2473	45-3-28
3-D3	ED311864	Zener Dioe RD-3.3E (C)	45-6-72
3-D4to7	ED311852	Silicon Diode 1S2471	45-3-52
3-D8,9	ED624903	Silicon Diode 1S2473	45-3-28
3-D10,11	ED311852	Silicon Diode 1S2471	45-3-52
3-D12to15	ED311864	Zener Diode RD-3.3E (C)	45-6-72
3-D16	ED312449	Silicon Diode SS-5A	45-2-89
3-D17	ED312450	Silicon Diode SS-5AR	45-2-90
3-D18to22	ED300924	Silicon Diode GP08D	45-2-68
3-D23,24	ED311752	Zener Diode RD-22E (C)	45-6-72
3-D25to28	ED490511	Varistor VD1222	45-10-7
3-D29	ED313705	Zener Diode RD-20E (C)	45-6-72
3-D30	ED308467	Zener Diode RD-4.7E (C)	45-6-72
3-L1	EO551711	Phase Compensation Coil 2.2μH (±30%)	23-1-188
3-VR1	EV311838	Semi-Fixed/Vol. (Solid) CR29R 220 ohms (B)	36-28-6
3-VR2	EV310077	Semi-Fixed/Vol. (Solid) CR29R 1KB	36-28-6
3-VR3,4	EV311836	Semi-Fixed/Vol. (Solid) CR29R 10KB	36-28-6
3-RL1	EP311858	Relay MSJ48D2-0Z	47-1-38
3-P1	EJ311841	Micro Connector W-P1302	42-1-154
3-P3	EJ311841	Micro Connector W-P1302	42-1-154
3-P5	EJ207854	3P Plug. PC	42-1-96
3-P7	EJ311843	Micro Connector W-P1305	42-1-154
3-P10	EJ699355	6P Plug, PC	42-1-95
3-P12	EJ699355	6P Plug, PC	42-1-95
3-P14	EJ311840	2P Plug, W-P3002	42-1-152
3-P16	EJ207854	3P Plug, PC	42-1-96
3-P18,19	EJ311841	Micro Connector W-P1302	42-1-154
3-P20	EJ311842	Micro Connector W-P1303	42-1-154
3-C41	EC311689	NP/C. 330μF (M) 6.3WV	24-17-31
3-C44	EC662128	Solid Aluminum/C. (Vert.) 2.2μF (M) 25WV	24-19-2
3-R1	ER311751	Metal Film/R. 1/4W 100 ohms (F)	35-17-12
3-R2	ER311672	Metal Film/R. 1/4W 150K (F)	35-17-12
3-R5,6	ER311757	Metal Film/R. 1/4W 4.7K (F)	35-17-12
3-R7,8	ER311671	Metal Film/R. 1/4W 180 ohms (F)	35-17-12
3-R9,10	ER312324	Metal Film/R. 1/4W 68 ohms (F)	35-17-12
3-R16,17	ER311668	Carbon/R. F 1/4W 1.8K (J)	35-11-25
3-R18,19	ER311663	Carbon/R. F 1/4W 68 ohms (J)	35-11-25
3-R21	ER311668	Carbon/R. F 1/4W 1.8K (J)	35-11-25
3-R22	ER311664	Carbon/R. F 1/4W 270 ohms (J)	35-11-25
3-R24,25	ER311668	Carbon/R. F 1/4W 1.8K (J)	35-11-25
3-R27	ER311667	Carbon/R. F 1/4W 1K (J)	35-11-25
3-R28	ER311664	Carbon/R. F 1/4W 270 ohms (J)	35-11-25
3-R29	ER307196	Carbon/R. F 1/4W 100 ohms (J)	35-11-25
3-R32,33	ER307196	Carbon/R. F 1/4W 100 ohms (J)	35-11-25
3-R35	ER311667	Carbon/R. F 1/4W 1K (J)	35-11-25
3-R37	ER311667	Carbon/R. F 1/4W 1K (J)	35-11-25
3-R38,39	ER312453	Metal Oxide Film/R. 3W 4.7K (J)	35-15-9
3-R40,41	ER308849	Carbon/R. F 1/4W 220 ohms (J)	35-11-25
3-R42,43	ER310843	Carbon/R. F 1/4W 680 ohms (J)	35-11-25
3-R47to50	ER311669	Carbon/R. F 1/4W 3.3K (J)	35-11-25
3-R51	ER308849	Carbon/R. F 1/4W 220 ohms (J)	35-11-25
3-R52	ER307196	Carbon/R. F 1/4W 100 ohms (J)	35-11-25
3-R53,54	ER675112	Carbon/R. F 1/2W 6.8 ohms (J)	35-11-13
3-R55,56	ER311667	Carbon/R. F 1/4W 1K (J)	35-11-25
3-R57,58	ER439132	Metal Oxide Film/R. 2W 150 ohms (K)	35-15-8
3-R59to66	ER312414	Metal Plate/R. MPC71F1 5W 1 ohm (K)	35-16-48
3-R67,68	ER312486	Metal Oxide Film/R. 2W 4.7 ohms (K)	35-15-18
3-R69,70	ER380856	Metal Oxide Film/R. 2W 10 ohms (K)	35-15-8
3-R71,72	ER311665	Carbon/R. F 1/4W 560 ohms (J)	35-11-25
3-R75,76	ER312451	Metal Oxide Film/R. 2W 4.7K (J)	35-15-8
3-R89	ER311662	Carbon/R. F 1/4W 22 ohms (J)	35-11-25
3-R95	ER313798	Metal Oxide Film/R. 2W 1.5K (J)	35-15-8
3-R102,103	ER308875	Carbon/R. F 1/2W 10 ohms (J)	35-11-27
3-2	ZS463353	Tapping Screw, #2, 3x8 (BR) (Black)	

When ordering parts, please describe Parts Number, Description, and Model Number in detail.

4. FILTER P.C BOARD (PM-1203/1203S) BLOCK

Symbol No.	Parts No.	Description	Schematic No.
4-1	BA311438	Filter P.C Board Comp. PS-120M	PM-1203
4-TR1	ET307195	Transistor 2SC2240 (GR) (BL)	45-1-302
4-TR2,3	ET305463	Transistor 2SA970 (GR) (BL)	45-1-303
4-TR4	ET307195	Transistor 2SC2240 (GR) (BL)	45-1-302
4-VR1	EV311834	Vol. V24L52PHN25KC 100KB	36-2-44
4-SW1	ES311690	Push SW. J-K2014	25-5-312
4-C2	EC311779	NP/C. 2.2μF 50WV	24-17-33
4-2	ZS608477	Screw, Pan 3x4	

5. METER P.C BOARD (PM-2001/2001S) BLOCK

Symbol No.	Parts No.	Description	Schematic No.
5-1	BA312162	Meter P.C Board Comp. PS-200M	PM-2001
5-IC1	EI308865	IC TA7318P	45-8-306
5-IC2,3	EI311855	IC LB1405	45-8-328
5-TR1	ET311791	Transistor 2SA968(O)(Y)	45-1-338
5-TR2	ET557965	Transistor 2SA733(Q)(R)	45-1-124
5-TR3,4	ET307195	Transistor 2SC2240 (GR) (BL)	45-1-302
5-D1,2	ED300924	Silicon Diode GP08D	45-2-68
5-D3	ED311853	Zener Diode RD-6.2E(C)	45-6-72
5-D4	ED624903	Silicon Diode 1S2473	45-3-28
5-VR1	EV310077	Semi-Fixed/Vol. (Solid) CR29R 1KB	36-28-6
5-VR2	EV311835	Semi-Fixed/Vol. (Solid) CR29R 2.2KB	36-28-6
5-R1,2	ER453565	Metal Oxide Film/R. 2W 1.2K (J)	35-15-8
5-FR1	ER293635	Fuse/R. FRN158 1/4W 10 ohms (J) 700 mA	35-14-20

When ordering parts, please describe Parts Number, Description, and Model Number in detail.

6. ASSEMBLY BLOCK

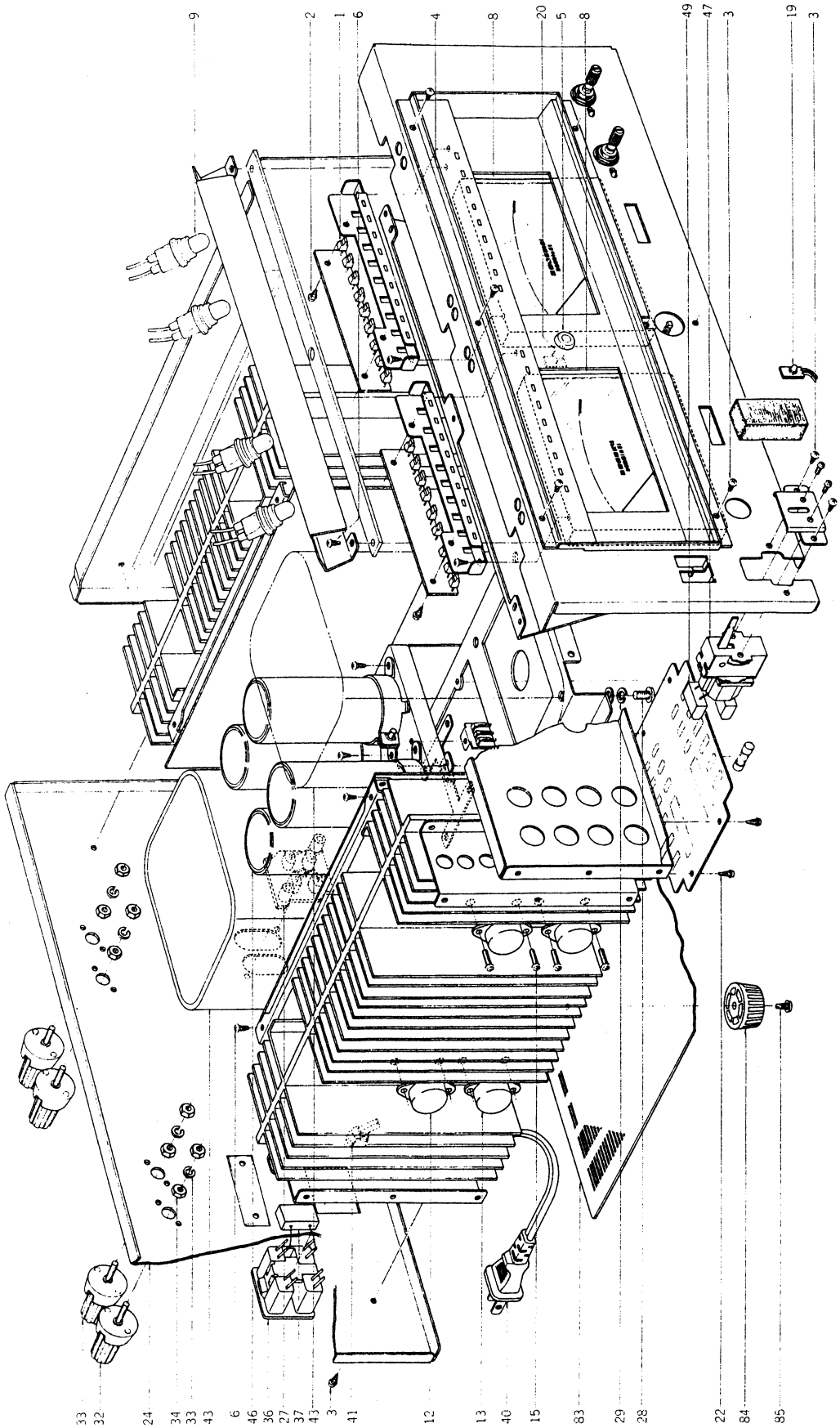

6. ASSEMBLY BLOCK

Ref. No.	Parts No.	Description	Schematic No.
		LED P.C BOARD (C) BLOCK	
6-1	ED311856	LED SLP137B	45-15-23
6-2	ZS447761	Tapping Screw, #2, 3x6 (BR) (Black)	
		FRONT CHASSIS BLOCK	
6-3	ZS308846	Tapping Screw, #2, 3x8 (BR) (Oval Neck)	7-1-69
6-4	ML312430	Meter Plate	PM-2006/2007
6-5	MH311627	Collar	PM-1217
6-6	ZS463353	Tapping Screw, #2, 3x8 (BR) (Black)	
6-7x	ZS355522	Screw, Pan 3x6 (Black)	
6-8	EM312444	Meter KL-90G-100	46-2-24
6-9	EL311833	Lamp (Cord Type) 8V 300mA (200mmx2)	28-2-71
		TEMP. COMPENSATION P.C BOARD BLOCK	
6-10x	ET635220	Transistor 2SC945L(K)(P) (TR1)	45-1-85
6-11x	EJ313607	Micro Connector Assy C2208 (J20, 21)	26-6-329
		HEAT SINK BLOCK	
6-12	ET312446	Transistor 2SD665 (O) (R)	45-1-345
6-13	ET312447	Transistor 2SB645 (O) (R)	45-1-346
6-14x	EJ624486	Power TR. Socket	31-1-97
6-15	ZS608501	Screw, Pan 3x12	
6-16x	EJ313603	Mini Connector Assy C1103 (J10, 11)	26-6-325
6-17x	EJ313605	Mini Connector Assy C1105 (J13)	26-6-327
6-18x	EJ313604	Mini Connector Assy C1104 (J12)	26-6-326
		LED P.C BOARD (B) BLOCK	
6-19	ED311794	LED SY405T (Power)	45-15-24
6-20	ED311857	LED TLR114 (Protection)	45-15-25
6-21x	EJ313596	Micro Connector Assy C1205 (J18)	26-6-318
6-22	ZS311745	Tapping Screw, #2, 3x8 (BR) W=8 (Black)	
6-23x	ZS608477	Screw, Pan 3x4	
6-24	SP312437	Rear Panel (U-2) (U/T)	PM-2010
6-25x	SP312438	Rear Panel (C, A-2) (CSA)	PM-2011
6-26x	SP312439	Rear Panel (E-2) (CEE)	PM-2013
6-27x	SP312440	Rear Panel (B-2) (UK)	PM-2014
6-28	ZS201778	Screw, Pan 4x8	
6-29	ZW668621	M4 Spring Washer (Black)	
6-30	EJ312482	4P Pin Jack	31-5-149
6-31x	ZS522865	Tapping Screw, #2, 3x12 (BR) (Black)	
6-32	EJ311695	Terminal T5689-A	32-1-99
6-33	EJ311696	Terminal T5689-B	32-1-102
6-34	ZW273914	Spring Washer, M4	
6-35	ZW413188	Nut, M4 #1	
6-36	EZ225145	⚠ 2-Throw AC Outlet (U/T, CSA)	31-1-166
6-37	EC283375	⚠ MP/C. 0.047μF (M) 250WV (U/T)	24-9-118
6-38x	EC286198	⚠ Ceramic/C. AL-10 0.01μF (Z) 125WV (CSA)	24-5-69
6-39x	EC308528	⚠ Oil Paper/C. ECN-C4A 0.047μF (M) 450WV (CEE, UK)	24-8-6
6-40	EW311816	⚠ Power Cord 125V 13A (U/T, CSA)	26-3-75
6-41	EZ631945	Strain Relief SR-4N-4 (U/T, CSA)	2-7-49
6-42x	EJ296853	⚠ 3P In-let CM-3 (CEE, UK)	31-1-199
6-43	BT312425	⚠ Power Trans. PS-200MT-70 (U/T)	38-4-694
6-44x	BT312422	⚠ Power Trans. PS-200MT-30 (CSA)	38-4-692
6-45x	BT312424	⚠ Power Trans. PS-200MT-40 (CEE, UK)	38-4-693
6-46	EC312459	Elect./C. 10000μF 90WV	24-10-131
6-47	ES311805	⚠ Lever SW. SY02-2 (U85DMU, C) (U/T, CSA)	25-12-48
6-48x	ES311806	⚠ Lever SW. V85DV (CEE, UK)	25-12-50
6-49	EC283375	⚠ MP/C. 0.047μF (M) 250WV (U/T)	24-9-118
6-50x	EC286198	⚠ Ceramic/C. AL-10 0.01μF (Z) 125WV (CSA)	24-5-69
6-51x	EC308528	⚠ Oil Paper/C. ECN-C4A 0.047μF (M) 450WV (CEE, UK)	24-8-6
6-52x	EJ314568	Fuse Holder (UK)	40 [illegible]
6-53x	EF242605	⚠ Fuse (SEMKO T) 6.3AT (UK)	39-1-5[illegible]
6-54x	EC286198	Ceramic/C. AL-10 0.01μF (Z) 125WV (CSA)	24-5-69
6-55x	EC308528	Oil Paper/C. ECN-C4A 0.047μF (M) 450WV (CEE, UK)	24-8-6
6-56x	EJ313598	Micro Connector Assy C1207(J1)	26-6-320
6-57x	EJ313597	Micro Connector Assy C1206(J2)	26-6-319
6-58x	EJ313591	Micro Connector Assy C1201(J3)	26-6-314
6-59x	EJ313592	Micro Connector Assy C1202(J4)	26-6-315
6-60x	EJ313602	Mini Connector Assy C1102(J5,6)	26-6-324
6-61x	EJ313600	Micro Connector Assy C1209(J7,8)	26-6-322
6-62x	EJ313594	Micro Connector Assy C1203(J9)	26-6-316
6-63x	EJ313601	Mini Connector Assy C1101 (J14,15)	26-6-323
6-64x	EJ313606	Mini Connector Assy C1106 (J16,17)	26-6-328
6-65x	EJ313595	Micro Connector Assy C1204 (J19)	26-6-317
6-66x	EW313609	Wire (A) Assy (320mm)	26-1-9
6-67x	EW313610	Wire (B) Assy (180mm)	26-1-10
6-68x	EW313611	Wire (C) Assy (230mm)	26-1-11
6-69x	EW313613	Wire (E) Assy (230mm)	26-1-13
6-70x	EF309388	⚠ Fuse 800mA 250V. (U/T)	39-1-64
6-71x	EF311839	⚠ Fuse 1.6A 250V (U/T)	39-1-64
6-72x	EF242605	⚠ Fuse (SEMKO T) 6.3AT (U/T)	39-1-53
6-73x	EF303348	⚠ Fuse ST-6 6.3A (CSA)	39-1-63
6-74x	EF309391	⚠ Fuse 800mA 125V (CSA)	39-1-65
6-75x	EF308847	⚠ Fuse 1.6A 125V (CSA)	39-1-65
6-76x	EF303348	⚠ Fuse ST-6 6.3A (CSA)	39-1-63
6-77x	EF309391	⚠ Fuse 800mA 125V (CSA)	39-1-65
6-78x	EF308847	⚠ Fuse 1.6A 125V (CSA)	39-1-65
6-79x	EF300577	⚠ Fuse (EAK) 5AT (CEE, UK)	39-1-59
6-80x	EF593706	⚠ Fuse (SEMKO T) 500mAT (CEE, UK)	39-1-53
6-81x	EF623103	⚠ Fuse (SEMKO T) 1AT (CEE, UK)	39-1-53
6-82x	ZS311746	Tapping Screw, #2, 3x8 (Countersunk) (Black)	
6-83	SP311644	Bottom Plate	PM-1234
6-84	SA312465	Circular Foot (A) Part CA	CA-6014
6-85	ZS311747	Tapping Screw, #2, 4x8 (Pan) (Black)	
6-86x	EC283375	MP/C. 0.047μF(M) 250WV(U/T)	24-9-118

When ordering parts, please describe Parts Number, Description, and Model Number in detail.

7. FINAL ASSEMBLY BLOCK

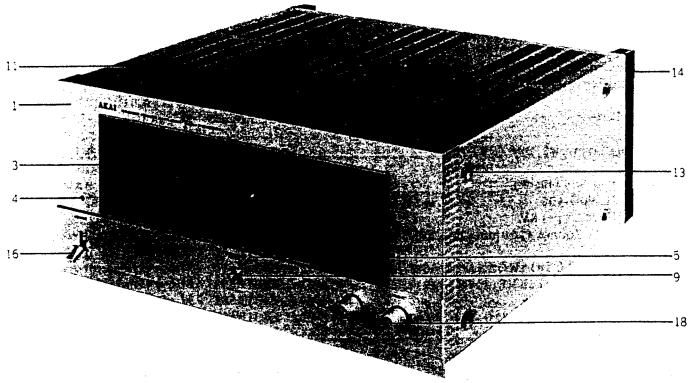

7. FINAL ASSEMBLY BLOCK

Ref. No.	Parts No.	Description	Schematic No.
7-1	BD312146	Front Panel Block Comp. PS-200M	
7-2x	BD312147	Front Panel Block Comp. PS-200M-BL	
7-3	SZ311647	Front Plate	PM-1237
7-4	SE311728	Power Lens	PC-2021
7-5	SE311652	Button Escutcheon	PM-1240
7-6x	ZG311653	Spring	PM-1241
7-7x	SB311650	Button	PM-1239
7-8x	SB311651	Button (BL)	PM-1239
7-9	SH311648	Cap	PM-1238
7-10x	SH311649	Cap (BL)	PM-1238
7-11	BC311654	Case	PM-1242
7-12x	BC312479	Case (BL)	PM-1242
7-13	ZS537006	Screw, Bind 4x8 (Black)	
7-14	SA311655	Foot	PM-1243
7-15x	ZS608635	Screw, Pan 4x10	
7-16	ML311731	Lever (A)	PC-2024
7-17x	ML311732	Lever (A-BL)	PC-2024
7-18	SK311735	Knob	PC-2026
7-19x	SK311736	Knob (BL)	PC-2026

When ordering parts, please describe Parts Number, Description, and Model Number in detail.

INDEX

Parts No.	Ref. No. & Symbol No.	Parts No.	Ref. No. & Symbol No.	Parts No.	Ref. No. & Symbol No.	Parts No.	Ref. No. & Symbol No.
BA311370	3-1	ER311764	2-R83	SK311739	8-20		
BA313970	2-1	ER311765	2-R84	SK311740	8-21x		
BC311730	8-9	ER311766	2-R85	SP311718	7-22		
BC312352	8-10x	ER311767	2-R86	SP311719	7-23x		
BD313972	8-1x	ER311768	2-R87	SP311720	7-24x		
BD313973	8-2x	ER311772	2-R31	SP311721	7-25x		
BT311809	7-4x	ER311773	2-R63	SP311722	7-52		
BT311810	7-5x	ER311774	4-R1	TA311726	8-3		
BT311811	7-3	ER311774	5-R1	TA311727	8-4x		
EC283375	7-13	ER311775	5-R2	TA646773	7-19		
EC283375	7-38	ER311875	2-R28,29	ZG312478	8-8x		
EC286198	7-14x	ER311876	4-R7	ZS201778	7-9x		
EC286198	7-36x	ER312460	3-R7	ZS308846	7-1		
EC301320	7-15x	ER312461	2-R5,6	ZS311745	7-17x		
EC301320	7-35x	ER483287	3-R29	ZS311746	7-51x		
EC301320	7-37x	ES246227	5-SW1	ZS311747	7-54		
EC311778	2-C49	ES311797	2-SW3	ZS411232	8-13x		
EC311780	2-C8	ES311797	3-SW1	ZS421740	2-2		
EC311780	2-C23	ES311798	2-SW1	ZS421740	3-2		
EC311780	2-C32	ES311799	2-SW2	ZS463353	7-34x		
EC311780	2-C50	ES311802	4-SW1	ZS522865	7-30x		
EC311780	2-C51	ES311803	4-SW2	ZS537006	7-6		
EC311780	4-C5	ES315601	2-SW3	ZS537006	8-11		
EC311781	2-C30	ES664222	7-11	ZS608185	7-31		
EC311782	2-C35	ES665807	7-12x	ZS608477	7-2		
EC311786	2-C19	ET300931	2-TR17	ZW270123	7-21		
EC311787	2-C18	ET300931	3-TR9	ZW273914	7-8		
EC311788	2-C17	ET300931	3-TR11	ZW312470	7-26x		
EC312462	2-C16	ET300931	4-TR2	ZW312471	7-27x		
EC427228	7-40x	ET301165	2-TR18	ZW312472	7-28x		
EC427228	7-41x	ET301165	3-TR10	ZW312473	7-29x		
EC427228	7-42x	ET302465	2-TR8,9	ZW322110	7-20		
EC662128	4-C2	ET302465	2-TR21to24	ZW413188	7-7		
ED245430	3-D1to5	ET305463	2-TR1	ZW413188	7-10x		
ED311752	3-D8	ET305463	2-TR3				
ED311794	6-D1	ET305463	2-TR6				
ED311853	4-D1	ET305463	2-TR13				
ED490511	2-D1	ET305463	2-TR16				
ED490511	2-D5,6	ET305463	2-TR28				
ED490511	2-D10	ET305463	2-TR31				
ED490511	3-D6,7	ET305463	2-TR33,34				
ED490511	3-D9	ET305463	3-TR1				
ED624903	2-D2to4	ET305463	3-TR6				
ED624903	2-D7to9	ET305463	3-TR8				
EF300596	7-50x	ET307195	2-TR2				
EF300598	7-49x	ET307195	2-TR4,5				
EF306088	7-48x	ET307195	2-TR10to12				
EF306125	7-46	ET307195	2-TR14,15				
EF309388	7-45	ET307195	2-TR25to27				
EF309391	7-47x	ET307195	2-TR29,30				
EI311789	3-IC1	ET307195	2-TR32				
EJ293365	4-J3,4	ET307195	2-TR35				
EJ293376	4-J2	ET307195	3-TR2				
EJ296853	7-33x	ET307195	3-TR5				
EJ311808	7-16	ET307195	3-TR7				
EJ311812	7-39	ET311790	3-TR3				
EJ312463	4-J1	ET311791	3-TR4				
EJ312464	4-J5	ET311792	2-TR7				
EP249344	2-RL1	ET635220	4-TR1				
EP249344	4-RL1	EV311795	2-VR1				
ER307196	2-R76,77	EV311796	2-VR2				
ER307196	2-R102,103	EV311796	2-VR3				
ER308849	2-R75	EV312338	3-VR1				
ER310323	2-R1	EV315600	2-VR1				
ER310324	2-R55	EV618052	2-VR4				
ER310326	2-R105	EW311816	7-43				
ER310328	2-R106	EZ225145	7-32				
ER310436	2-R82	EZ631945	7-44				
ER311748	3-R12,13	ML311733	8-14				
ER311751	2-R2	ML311734	8-15x				
ER311753	2-R40	MS311709	7-18				
ER311754	2-R41	SA311714	8-12				
ER311755	2-R46,47	SA311742	7-53				
ER311757	2-R51	SB312474	8-6				
ER311757	2-R64	SB312475	8-7x				
ER311759	2-R52	SE311728	8-5				
ER311760	2-R53	SK311735	8-16				
ER311761	2-R54	SK311736	8-17x				
ER311762	2-R80	SK311737	8-18				
ER311763	2-R81	SK311738	8-19x				

2. PS-120M INDEX

Parts No.	Ref. No. & Symbol No.	Parts No.	Ref. No. & Symbol No.	Parts No.	Ref. No. & Symbol No.	Parts No.	Ref. No. & Symbol No.
BA311432	2-1	EJ311843	2-P8	ER311751	2-R1	EV311838	3-VR1
BA311436	3-1	EJ311843	3-P7	ER311751	3-R1	EW311816	6-44
BA311438	4-1	EJ312482	6-40	ER311757	2-R5,6	EW313609	6-78x
BA311440	5-1	EJ313591	6-70x	ER311757	3-R5,6	EW313610	6-79x
BC311654	7-11	EJ313592	6-71x	ER312324	2-R9,10	EW313611	6-80x
BC312479	7-12x	EJ313594	6-74x	ER312324	3-R9,10	EW313612	6-81x
BD311414	7-1	EJ313595	6-77x	ER312483	5-R1,2	EZ225145	6-42
BD311415	7-2x	EJ313596	6-12x	ER312486	2-R67,68	EZ631945	6-45
BT311859	6-26	EJ313597	6-69x	ER312486	3-R67,68	MH311627	6-5
BT311860	6-28x	EJ313598	6-68x	ER312487	2-R83,84	ML311629	6-4
BT311862	6-27x	EJ313599	6-14x	ER380856	2-R69,70	ML311731	7-16
EC283375	6-37	EJ313600	6-73x	ER380856	3-R69,70	ML311732	7-17x
EC283375	6-54	EJ313601	6-75x	ER439132	2-R57,58	SA311655	7-14
EC283375	6-88x	EJ313602	6-72x	ER439132	3-R57,58	SA312465	6-86
EC286198	6-39x	EJ313603	6-19x	ER622978	2-R59to62	SB311650	7-7x
EC286198	6-49x	EJ313604	6-21x	ER622978	3-R59to62	SB311651	7-8x
EC286198	6-56x	EJ313605	6-20x	ES311690	4-SW1	SE311652	7-5
EC308528	6-38x	EJ313606	6-76x	ES311805	6-52	SE311728	7-4
EC308528	6-48x	EJ314568	6-57x	ES311806	6-53x	SH311648	7-9
EC308528	6-55x	EJ624486	6-17x	ET300931	3-TR35	SH311649	7-10x
EC311688	6-32	EJ699355	2-P11	ET302465	2-TR1,2	SK311735	7-18
EC311689	3-C41	EJ699355	2-P13	ET302465	3-TR1,2	SK311736	7-19x
EC311779	4-C2	EJ699355	3-P10	ET305463	2-TR8,9	SP311640	6-33
EC662128	3-C44	EJ699355	3-P12	ET305463	2-TR23	SP311641	6-34x
ED300924	2-D18to21	EL311833	6-9	ET305463	2-TR26	SP311642	6-35x
ED300924	3-D18to22	EM311863	6-7	ET305463	2-TR28	SP311643	6-36x
ED300924	5-D1,2	EO551711	2-L1	ET305463	3-TR8,9	SP311644	6-83
ED311752	2-D23,24	EO551711	3-L1	ET305463	3-TR23	SZ311647	7-3
ED311752	3-D23,24	EP311858	3-RL1	ET305463	3-TR26	ZG311653	7-6x
ED311794	6-10	ER293635	5-FR1	ET305463	3-TR28	ZS201778	6-25x
ED311849	2-D16	ER307196	2-R29	ET305463	4-TR2,3	ZS308846	6-3
ED311849	3-D16	ER307196	2-R32,33	ET307195	2-TR4to7	ZS311745	6-22
ED311851	2-D17	ER307196	3-R29	ET307195	2-TR24,25	ZS311746	6-82x
ED311851	3-D17	ER307196	3-R32,33	ET307195	2-TR27	ZS311747	6-87
ED311852	2-D4to7	ER308849	2-R40,41	ET307195	3-TR4to7	ZS312349	6-51x
ED311852	2-D10,11	ER308849	3-R40,41	ET307195	3-TR24,25	ZS344338	6-18
ED311852	3-D4to7	ER308875	2-R81,82	ET307195	3-TR27	ZS355522	6-8x
ED311852	3-D10,11	ER308875	3-R102,103	ET307195	3-TR36	ZS411232	7-15x
ED311853	5-D3	ER309092	3-R95	ET307195	4-TR1	ZS447761	6-2
ED311854	3-D29	ER310147	2-R53,54	ET307195	4-TR4	ZS463353	2-2
ED311856	6-1	ER310147	3-R53,54	ET307195	5-TR3,4	ZS463353	3-2
ED311857	6-11	ER310843	2-R42,43	ET311790	2-TR21	ZS463353	6-6
ED311864	2-D12to15	ER310843	3-R42,43	ET311790	2-TR29	ZS522865	6-41x
ED311864	3-D12to15	ER311662	2-R51,52	ET311790	3-TR21	ZS537006	6-85x
ED490511	2-D25,26	ER311662	3-R51,52	ET311790	3-TR29	ZS537006	7-13
ED490511	3-D25,26	ER311662	3-R89	ET311791	2-TR22	ZS608477	4-2
ED624903	2-D1,2	ER311663	2-R18,19	ET311791	2-TR30	ZS608477	6-24x
ED624903	2-D8,9	ER311663	3-R18,19	ET311791	3-TR22	ZS608477	6-50x
ED624903	3-D1,2	ER311664	2-R22	ET311791	3-TR30	ZW237857	6-29
ED624903	3-D8,9	ER311664	2-R28	ET311791	5-TR1	ZW273914	6-30
ED624903	5-D4	ER311664	3-R22	ET311792	2-TR3	ZW413188	6-31
EF242605	6-58x	ER311664	3-R28	ET311792	3-TR3	ZW668621	6-23x
EF300577	6-65x	ER311665	2-R71,72	ET311844	2-TR20	ZW668621	6-84x
EF303348	6-62x	ER311665	3-R71,72	ET311844	3-TR20		
EF305703	6-63x	ER311667	2-R27	ET311845	2-TR10		
EF306124	6-59x	ER311667	2-R35	ET311845	3-TR10		
EF308847	6-64x	ER311667	2-R37	ET311846	6-16		
EF311839	6-60x	ER311667	2-R55,56	ET311847	6-15		
EF623103	6-67x	ER311667	3-R27	ET311865	2-TR11		
EF668474	6-66x	ER311667	3-R35	ET311865	3-TR11		
EF691007	6-61x	ER311667	3-R37	ET312485	2-TR19		
EI308865	5-IC1	ER311667	3-R55,56	ET312485	3-TR19		
EI311855	5-IC2	ER311668	2-R16,17	ET557965	2-TR16,17		
EJ207854	2-P6	ER311668	2-R21	ET557965	3-TR16,17		
EJ207854	2-P17	ER311668	2-R23	ET557965	3-TR31		
EJ207854	3-P5	ER311668	2-R25	ET557965	5-TR2		
EJ207854	3-P16	ER311668	3-R16,17	ET635220	2-TR13to15		
EJ296853	6-43x	ER311668	3-R21	ET635220	2-TR18		
EJ311695	6-46	ER311668	3-R23	ET635220	3-TR13to15		
EJ311696	6-47	ER311668	3-R25	ET635220	3-TR18		
EJ311840	2-P15	ER311669	2-R47to50	ET635220	3-TR32to34		
EJ311840	3-P14	ER311669	3-R47to50	ET635220	6-13x		
EJ311841	2-P2	ER311671	2-R7,8	EV310077	2-VR2		
EJ311841	2-P4	ER311671	3-R7,8	EV310077	3-VR2		
EJ311841	2-P9	ER311672	2-R2	EV310077	5-VR1		
EJ311841	3-P1	ER311672	3-R2	EV311834	4-VR1		
EJ311841	3-P3	ER311673	2-R75,76	EV311835	5-VR2		
EJ311841	3-P18,19	ER311673	3-R75,76	EV311836	2-VR3,4		
EJ311842	2-P21	ER311683	2-R38,39	EV311836	3-VR3,4		
EJ311842	3-P20	ER311683	3-R38,39	EV311838	2-VR1		

3. PS-200M INDEX

Parts No.	Ref. No. & Symbol No.	Parts No.	Ref. No. & Symbol No.	Parts No.	Ref. No. & Symbol No.	Parts No.	Ref. No. & Symbol No.
BA311438	4-1	EJ311841	2-P4	ER311751	2-R1	EV310077	3-VR2
BA312154	2-1	EJ311841	2-P9	ER311751	3-R1	EV310077	5-VR1
BA312158	3-1	EJ311841	3-P1	ER311757	2-R5,6	EV311834	4-VR1
BA312162	5-1	EJ311841	3-P3	ER311757	3-R5,6	EV311835	5-VR2
BC311654	7-11	EJ311841	3-P18,19	ER312324	2-R9,10	EV311836	2-VR3,4
BC312479	7-12x	EJ311842	2-P21	ER312324	3-R9,10	EV311836	3-VR3,4
BD312146	7-1	EJ311842	3-P20	ER312414	2-R59to66	EV311838	2-VR1
BD312147	7-2x	EJ311843	2-P8	ER312414	3-R59to66	EV311838	3-VR1
BT312422	6-44x	EJ311843	3-P7	ER312451	2-R75,76	EW311816	6-40
BT312424	6-45x	EJ312482	6-30	ER312451	3-R75,76	EW313609	6-66x
BT312425	6-43	EJ313591	6-58x	ER312453	2-R38,39	EW313610	6-67x
EC283375	6-37	EJ313592	6-59x	ER312453	3-R38,39	EW313611	6-68x
EC283375	6-49	EJ313594	6-62x	ER312486	2-R67,68	EW313613	6-69x
EC283375	6-86x	EJ313595	6-65x	ER312486	3-R67,68	EZ225145	6-36
EC286198	6-38x	EJ313596	6-21x	ER313702	2-R83,84	EZ631945	6-41
EC286198	6-50x	EJ313597	6-57x	ER313798	3-R95	MH311627	6-5
EC286198	6-54x	EJ313598	6-56x	ER380856	2-R69,70	ML311731	7-16
EC308528	6-39x	EJ313600	6-61x	ER380856	3-R69,70	ML311732	7-17x
EC308528	6-51x	EJ313601	6-63x	ER439132	2-R57,58	ML312430	6-4
EC308528	6-55x	EJ313602	6-60x	ER439132	3-R57,58	SA311655	7-14
EC311689	3-C41	EJ313603	6-16x	ER453565	5-R1,2	SA312465	6-84
EC311779	4-C2	EJ313604	6-18x	ER675112	2-R53,54	SB311650	7-7x
EC312459	6-46	EJ313605	6-17x	ER675112	3-R53,54	SB311651	7-8x
EC662128	3-C44	EJ313606	6-64x	ES311690	4-SW1	SE311652	7-5
ED300924	2-D18to21	EJ313607	6-11x	ES311805	6-47	SE311728	7-4
ED300924	3-D18to22	EJ314568	6-52x	ES311806	6-48x	SH311648	7-9
ED300924	5-D1,2	EJ624486	6-14x	ET300931	3-TR35	SH311649	7-10x
ED308467	2-D29	EJ699355	2-P11	ET302465	2-TR1,2	SK311735	7-18
ED308467	3-D30	EJ699355	2-P13	ET302465	3-TR1,2	SK311736	7-19x
ED311752	2-D23,24	EJ699355	3-P10	ET305463	2-TR8,9	SP311644	6-83
ED311752	3-D23,24	EJ699355	3-P12	ET305463	2-TR23	SP312437	6-24
ED311794	6-19	EL311833	6-9	ET305463	2-TR26	SP312438	6-25x
ED311852	2-D4to7	EM312444	6-8	ET305463	2-TR28	SP312439	6-26x
ED311852	2-D10,11	EO551711	2-L1	ET305463	3-TR8,9	SP312440	6-27x
ED311852	3-D4to7	EO551711	3-L1	ET305463	3-TR23	SZ311647	7-3
ED311852	3-D10,11	EP311858	3-RL1	ET305463	3-TR26	ZG311653	7-6x
ED311853	5-D3	ER293635	5-FR1	ET305463	3-TR28	ZS201778	6-28
ED311856	6-1	ER307196	2-R29	ET305463	4-TR2,3	ZS308846	6-3
ED311857	6-20	ER307196	2-R32,33	ET307195	2-TR4to7	ZS311745	6-22
ED311864	2-D3	ER307196	2-R52	ET307195	2-TR24,25	ZS311746	6-82x
ED311864	2-D12to15	ER307196	3-R29	ET307195	2-TR27	ZS311747	6-85
ED311864	3-D3	ER307196	3-R32,33	ET307195	3-TR4to7	ZS355522	6-7x
ED311864	3-D12to15	ER307196	3-R52	ET307195	3-TR24,25	ZS447761	6-2
ED312449	2-D16	ER308849	2-R40,41	ET307195	3-TR27	ZS463353	2-2
ED312449	3-D16	ER308849	2-R51	ET307195	3-TR36	ZS463353	3-2
ED312450	2-D17	ER308849	3-R40,41	ET307195	4-TR1	ZS463353	6-6
ED312450	3-D17	ER308849	3-R51	ET307195	4-TR4	ZS522865	6-31x
ED313705	3-D29	ER308875	2-R81,82	ET307195	5-TR3,4	ZS537006	7-13
ED490511	2-D25to28	ER308875	3-R102,103	ET311790	2-TR21	ZS608477	4-2
ED490511	3-D25to28	ER310843	2-R42,43	ET311790	2-TR29	ZS608477	6-23x
ED624903	2-D1,2	ER310843	3-R42,43	ET311790	3-TR21	ZS608501	6-15
ED624903	2-D8,9	ER311662	3-R89	ET311790	3-TR29	ZS608635	7-15x
ED624903	3-D1,2	ER311663	2-R18,19	ET311791	2-TR22	ZW273914	6-34
ED624903	3-D8,9	ER311663	3-R18,19	ET311791	2-TR30	ZW413188	6-35
ED624903	5-D4	ER311664	2-R22	ET311791	3-TR22	ZW668621	6-29
EF242605	6-53x	ER311664	2-R28	ET311791	3-TR30		
EF242605	6-72x	ER311664	3-R22	ET311791	5-TR1		
EF300577	6-79x	ER311664	3-R28	ET311792	2-TR3		
EF303348	6-73x	ER311665	2-R71,72	ET311792	3-TR3		
EF303348	6-76x	ER311665	3-R71,72	ET311844	2-TR20		
EF308847	6-75x	ER311667	2-R27	ET311844	3-TR20		
EF308847	6-78x	ER311667	2-R35	ET311845	2-TR10		
EF309388	6-70x	ER311667	2-R37	ET311845	3-TR10		
EF309391	6-74x	ER311667	2-R55,56	ET311865	2-TR11		
EF309391	6-77x	ER311667	3-R27	ET311865	3-TR11		
EF311839	6-71x	ER311667	3-R35	ET312446	6-12		
EF593706	6-80x	ER311667	3-R37	ET312447	6-13		
EF623103	6-81x	ER311667	3-R55,56	ET312485	2-TR19		
EI308865	5-IC1	ER311668	2-R16,17	ET312485	3-TR19		
EI311855	5-IC2,3	ER311668	2-R21	ET557965	2-TR16,17		
EJ207854	2-P6	ER311668	2-R24,25	ET557965	3-TR16,17		
EJ207854	2-P17	ER311668	3-R16,17	ET557965	3-TR31		
EJ207854	3-P5	ER311668	3-R21	ET557965	5-TR2		
EJ207854	3-P16	ER311668	3-R24,25	ET635220	2-TR13to15		
EJ296853	6-42x	ER311669	2-R47to50	ET635220	2-TR18		
EJ311695	6-32	ER311669	3-R47to50	ET635220	3-TR13to15		
EJ311696	6-33	ER311671	2-R7,8	ET635220	3-TR18		
EJ311840	2-P15	ER311671	3-R7,8	ET635220	3-TR32to34		
EJ311840	3-P14	ER311672	2-R2	ET635220	6-10x		
EJ311841	2-P2	ER311672	3-R2	EV310077	2-VR2		

SECTION 3

SCHEMATIC DIAGRAM

1. PS-200C NO. 4-1 1580852A SCHEMATIC DIAGRAM
2. PS-200C NO. 4-2 1580853A SCHEMATIC DIAGRAM
3. PS-120M NO. 4-3 1580854A SCHEMATIC DIAGRAM
4. PS-200M NO. 4-4 1580855A SCHEMATIC DIAGRAM

TA7220P

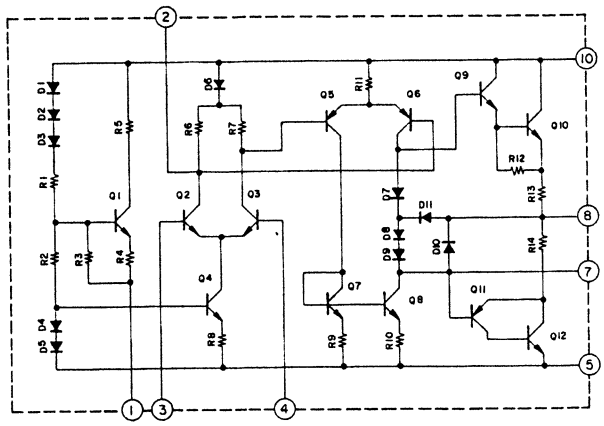

TA7318P

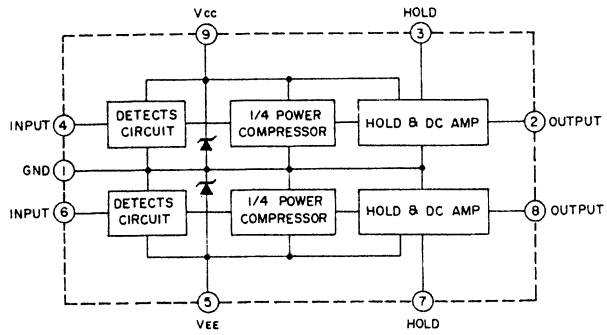

LB1405

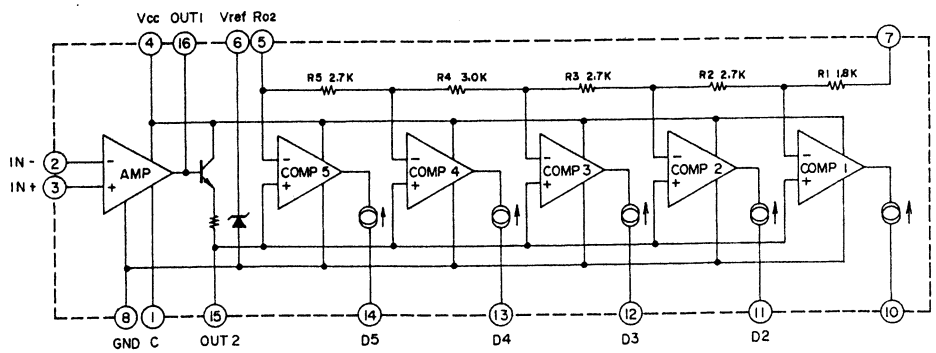

PS-200C

IMPEDANCE
SELECTOR P.C BOARD
P.C – 2033

※	F1	F2	F3	F4	F5
U/T	800mA 250V	400mA 250V	400mA 250V	315mA 250V	315mA 250V
CSA	800mA 125V			315mA 125V	315mA 125V
AAL	800mA 125V			315mA 125V	315mA 125V
CEE	T315mA			T200mA	T200mA
UK	T315mA			T200mA	T200mA

FUSE P.C BOARD (C) PC-20

CSA
AAL
POWER
AC 120V
60 Hz

FUSE P.C BOARD (U)
PC-2004

U/T
POWER
AC 110V
to 240V
50Hz

POWER SUP

INPUT
PHONEO
MC
MM 1
MM 2
TUNER
AUX 1
AUX 2
TAPE 1
PLAY
REC
TAPE 2
PLAY
REC
OUT PUT
POWER

LEFT
RIGHT

SELECTOR
TAPE MONITOR
F: FRONT
R: REAR

R-CH MC AMP
Same as L Channel

R-CH EQ AMP
Same as L Channel

R-CH
Sam

PRE AMP

MODE
STEREO
MONO
MUTE
TONE DEFEAT
BASS
TREBLE

LED P.C BOARD (B)
PM-1252

SELECTOR P.C BOARD PC-2001

00H016C

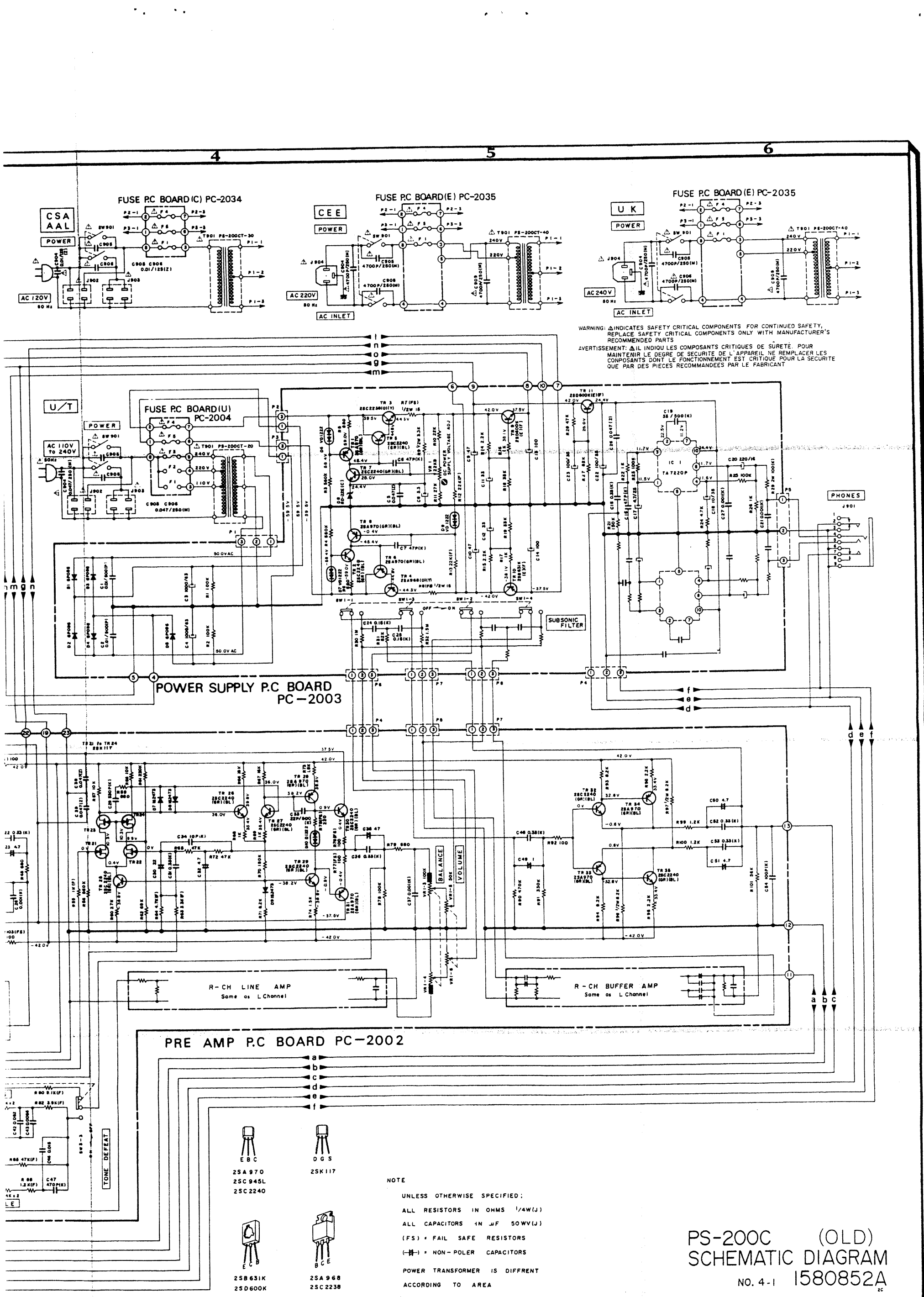
4
5
6
FUSE P.C BOARD (C) PC-2034
CSA
AAL
POWER
AC 120V
60 Hz
FUSE P.C BOARD (E) PC-2035
CEE
POWER
AC 220V
50 Hz
AC INLET
FUSE P.C BOARD (E) PC-2035
U K
POWER
AC 240V
50 Hz
AC INLET
WARNING: ⚠INDICATES SAFETY CRITICAL COMPONENTS FOR CONTINUED SAFETY, REPLACE SAFETY CRITICAL COMPONENTS ONLY WITH MANUFACTURER'S RECOMMENDED PARTS
AVERTISSEMENT: ⚠IL INDIQU LES COMPOSANTS CRITIQUES DE SÛRETÉ. POUR MAINTENIR LE DEGRE DE SECURITE DE L'APPAREIL NE REMPLACER LES CONPOSANTS DONT LE FONCTIONNEMENT EST CRITIQUE POUR LA SECURITE QUE PAR DES PIECES RECOMMANDEES PAR LE FABRICANT
U/T
FUSE P.C BOARD (U) PC-2004
POWER
AC 110V to 240V
50Hz
POWER SUPPLY P.C BOARD PC-2003
PHONES
J901
SUBSONIC FILTER
BALANCE
VOLUME
R-CH LINE AMP
Same as L Channel
R-CH BUFFER AMP
Same as L Channel
PRE AMP P.C BOARD PC-2002
TONE DEFEAT
2SA970
2SC945L
2SC2240
2SK117
2SB631K
2SD600K
2SA968
2SC2238
NOTE
UNLESS OTHERWISE SPECIFIED;
ALL RESISTORS IN OHMS 1/4W(J)
ALL CAPACITORS IN μF 50WV(J)
(FS) = FAIL SAFE RESISTORS
(—||—) = NON-POLER CAPACITORS
POWER TRANSFORMER IS DIFFRENT ACCORDING TO AREA
PS-200C (OLD)
SCHEMATIC DIAGRAM
NO. 4-1 1580852A
2C

PS-200C

IMPEDANCE
SELECTOR P.C BOARD
PC – 2033

※	F1	F2	F3	F4	F5
U/T	800mA 250V	400mA 250V	400mA 250V	315mA 250V	315mA 250V
CSA	800mA 125V			315mA 125V	315mA 125V
AAL	800mA 125V			315mA 125V	315mA 125V
CEE	T315mA			T200mA	T200mA
UK	T315mA			T200mA	T200mA

FUSE

CSA
AAL
POWER
AC 120V
60Hz

U/T
POWER
AC 110V
TO 240V
50Hz

INPUT
PHONEO
MC
MM 1
MM 2
TUNER
AUX 1
AUX 2
TAPE 1
PLAY
REC
TAPE 2
PLAY
REC
OUT PUT
POWER

SW 1 SELECTOR
SW 2 TAPE MONITOR
F: FRONT
R: REAR

R-CH MC AMP
Same as L Channel

R-CH EQ AMP
Same as L Channel

MUTE
MODE
REV
STEREO
MONO
TONE
BASS
TREBLE
LOUDNESS

LED P.C BOARD (B)
PM – 1252

SELECTOR P.C BOARD PC–2001

00X016-2

FUSE P.C BOARD(C) PC-2034

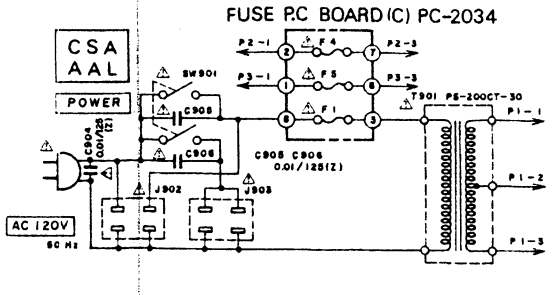

FUSE P.C BOARD(E) PC-2035

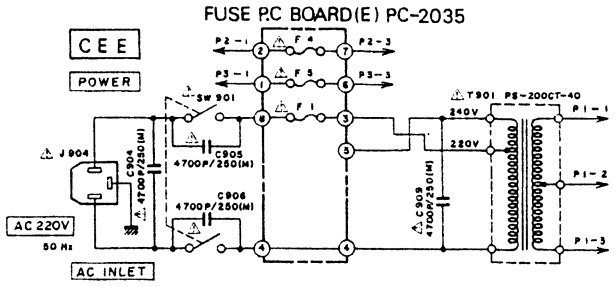

FUSE P.C BOARD(E) PC-2035

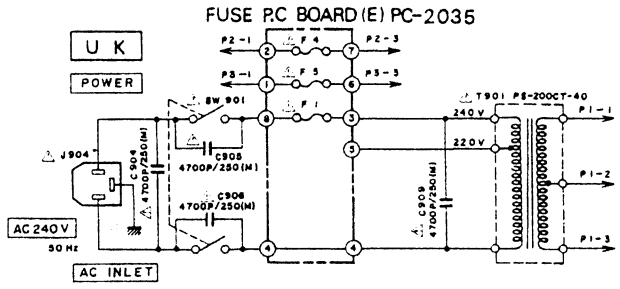

WARNING: ⚠ INDICATES SAFETY CRITICAL COMPONENTS. FOR CONTINUED SAFETY, REPLACE SAFETY CRITICAL COMPONENTS ONLY WITH MANUFACTURER'S RECOMMENDED PARTS

AVERTISSEMENT: ⚠ IL INDIQU LES COMPOSANTS CRITIQUES DE SÛRETÉ. POUR MAINTENIR LE DEGRE DE SECURITE DE L'APPAREIL NE REMPLACER LES CONPOSANTS DONT LE FONCTIONNEMENT EST CRITIQUE POUR LA SECURITE QUE PAR DES PIECES RECOMMANDEES PAR LE FABRICANT

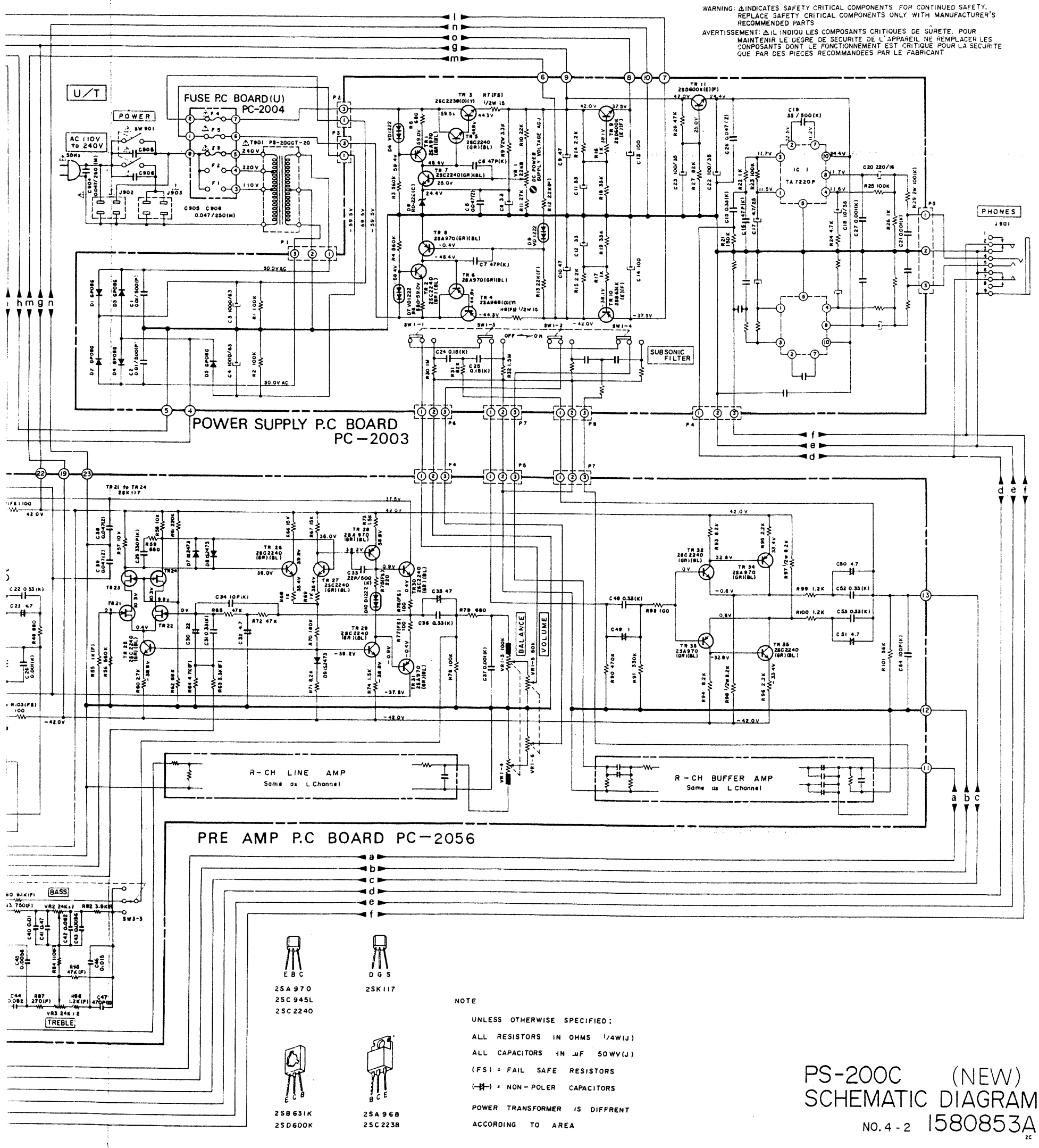

E B C
2SA970
2SC945L
2SC2240

D G S
2SK117

E C B
2SB631K
2SD600K

B C E
2SA968
2SC2238

NOTE

UNLESS OTHERWISE SPECIFIED;

ALL RESISTORS IN OHMS 1/4W(J)

ALL CAPACITORS IN μF 50WV(J)

(FS) = FAIL SAFE RESISTORS

(⊣⊢) = NON-POLER CAPACITORS

POWER TRANSFORMER IS DIFFRENT ACCORDING TO AREA

PS-200C (NEW) SCHEMATIC DIAGRAM

NO. 4-2 1580853A 2C

PS-120M

LEFT

INPUT

J901-1

DC

NORM

NORM

DC

J901-2

INPUT

RIGHT

FILTER P.C BOARD PM-1203

U/T

POWER

SW901

AC110V to 240V 50Hz/60Hz

AC OUTLET

J902

FUSE P.C BOARD(U) PM-1205

MAIN AMP P.C BOARD PM-1201 (LEFT)

TEMP COMPENSATION P.C BOARD PM-1249

CENTER OFF-SET VOLTAGE

IDLING CURRENT

R1 and R2 CEE UK

R3 CEE UK

CEE UK

POWER

SW901

AC220V/240V 50Hz

AC120V 60Hz

RELAY TERMINAL P.C BOARD PM-1247

FUSE P.C BOARD (E) PM-1251

CSA AAL

RELAY TERMINAL P.C BOARD PM-1247

FUSE P.C BOARD(C) PM-1248

MAIN AMP P.C BOARD PM-1202 (RIGHT)

001018

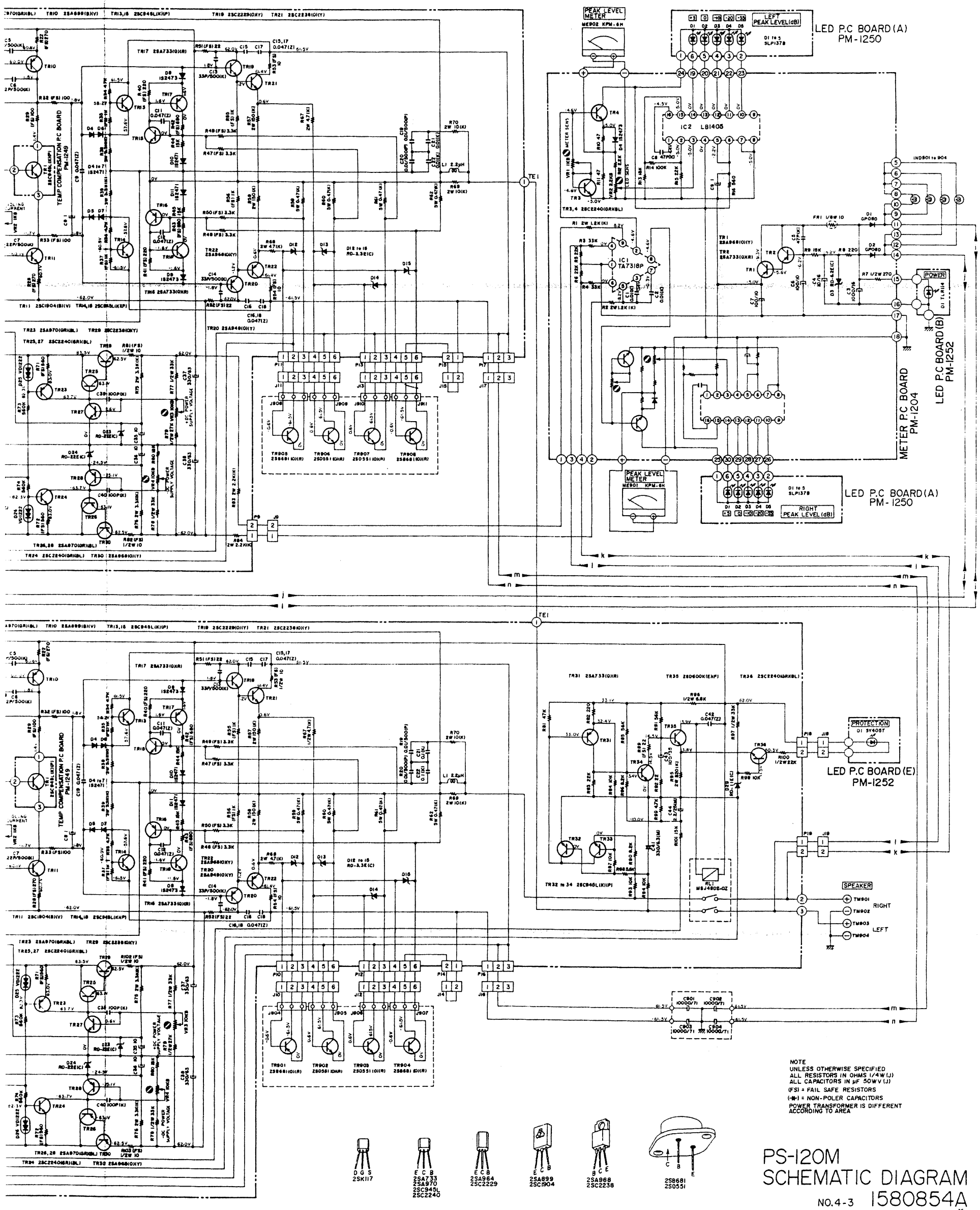
4
5
6
TEMP COMPENSATION P.C BOARD PM-1249
PEAK LEVEL METER
LEFT PEAK LEVEL(dB)
LED P.C BOARD(A) PM-1250
IC2 LB1405
IC1 TA7318P
METER P.C BOARD PM-1204
LED P.C BOARD(B) PM-1252
RIGHT PEAK LEVEL (dB)
LED P.C BOARD(E) PM-1252
PROTECTION
SPEAKER
RIGHT
LEFT
TE1
TR1 2SC945L(K)(P)
TR2 2SA733(QXR)
TR3,4 2SC2240(GRXBL)
TR5 2SA733(QXR)
TR6 2SA733(QXR)
TR7 2SA733(QXR)
TR9 2SC2229(OXY)
TR10 2SA899(BXV)
TR11 2SC1904(BXV)
TR13,18 2SC945L(K)(P)
TR14,18 2SC945L(K)(P)
TR15 2SA733(QXR)
TR16 2SA733(QXR)
TR17 2SA733(QXR)
TR18 2SC2229(OXY)
TR19 2SC2229(OXY)
TR20 2SA949(OXY)
TR21 2SC2238(OXY)
TR22 2SA968(OXY)
TR23 2SA970(GRXBL)
TR24 2SC2240(GRXBL)
TR25,27 2SC2240(GRXBL)
TR26,28 2SA970(GRXBL)
TR29 2SC2238(OXY)
TR30 2SA968(OXY)
TR31 2SA733(QXR)
TR32 to 34 2SC945L(K)(P)
TR35 2SD600K(EXF)
TR36 2SC2240(GRXBL)
TR901 2SB681(OXR)
TR902 2SB551(OXR)
TR903 2SB551(OXR)
TR904 2SB681(OXR)
TR905 2SB681(OXR)
TR906 2SB551(OXR)
TR907 2SB551(OXR)
TR908 2SB681(OXR)
TEMP COMPENSATION P.C BOARD PM-1249
POWER SUPPLY VOLTAGE
+DC POWER SUPPLY VOLTAGE
-DC POWER SUPPLY VOLTAGE
D1 to 3 SLP1378
D1 to 5 SLP1378
D1 TLR114
D1 5Y405T
D1 to 7 1S2471
D8 1S2473
D12 to 18 RD-3.3E(C)
D23 VD1822
D24 RD-22E(C)
D25 VD1822
D26 RD-3.3E(C)
D27 RD-3.3E(C)
D28 RD-3.3E(C)
D29 RD-3.3E(C)
D1 GP080
D2 GP080
D3 RD-6.2E(C)
D4 RD-6.2E(C)
D5 RD-6.2E(C)
D6 RD-6.2E(C)
D1 to 5 1S2473
D1 to 904
RL1 MS1480Z-DZ
VR1 10KB METER SENS
VR2 2.2KB LEED SENS
VR3 10KB
VR4 10KB
VR5 10KB
VR6 10KB
VR7 10KB
VR8 10KB
VR9 10KB
VR10 10KB
VR11 10KB
VR12 10KB
VR13 10KB
VR14 10KB
VR15 10KB
VR16 10KB
VR17 10KB
VR18 10KB
VR19 10KB
VR20 10KB
VR21 10KB
VR22 10KB
VR23 10KB
VR24 10KB
VR25 10KB
VR26 10KB
VR27 10KB
VR28 10KB
VR29 10KB
VR30 10KB
VR31 10KB
VR32 10KB
VR33 10KB
VR34 10KB
VR35 10KB
VR36 10KB
VR37 10KB
VR38 10KB
VR39 10KB
VR40 10KB
VR41 10KB
VR42 10KB
VR43 10KB
VR44 10KB
VR45 10KB
VR46 10KB
VR47 10KB
VR48 10KB
VR49 10KB
VR50 10KB
VR51 10KB
VR52 10KB
VR53 10KB
VR54 10KB
VR55 10KB
VR56 10KB
VR57 10KB
VR58 10KB
VR59 10KB
VR60 10KB
VR61 10KB
VR62 10KB
VR63 10KB
VR64 10KB
VR65 10KB
VR66 10KB
VR67 10KB
VR68 10KB
VR69 10KB
VR70 10KB
VR71 10KB
VR72 10KB
VR73 10KB
VR74 10KB
VR75 10KB
VR76 10KB
VR77 10KB
VR78 10KB
VR79 10KB
VR80 10KB
VR81 10KB
VR82 10KB
VR83 10KB
VR84 10KB
VR85 10KB
VR86 10KB
VR87 10KB
VR88 10KB
VR89 10KB
VR90 10KB
VR91 10KB
VR92 10KB
VR93 10KB
VR94 10KB
VR95 10KB
VR96 10KB
VR97 10KB
VR98 10KB
VR99 10KB
VR100 10KB
VR101 10KB
VR102 10KB
VR103 10KB
VR104 10KB
VR105 10KB
VR106 10KB
VR107 10KB
VR108 10KB
VR109 10KB
VR110 10KB
VR111 10KB
VR112 10KB
VR113 10KB
VR114 10KB
VR115 10KB
VR116 10KB
VR117 10KB
VR118 10KB
VR119 10KB
VR120 10KB
VR121 10KB
VR122 10KB
VR123 10KB
VR124 10KB
VR125 10KB
VR126 10KB
VR127 10KB
VR128 10KB
VR129 10KB
VR130 10KB
VR131 10KB
VR132 10KB
VR133 10KB
VR134 10KB
VR135 10KB
VR136 10KB
VR137 10KB
VR138 10KB
VR139 10KB
VR140 10KB
VR141 10KB
VR142 10KB
VR143 10KB
VR144 10KB
VR145 10KB
VR146 10KB
VR147 10KB
VR148 10KB
VR149 10KB
VR150 10KB
VR151 10KB
VR152 10KB
VR153 10KB
VR154 10KB
VR155 10KB
VR156 10KB
VR157 10KB
VR158 10KB
VR159 10KB
VR160 10KB
VR161 10KB
VR162 10KB
VR163 10KB
VR164 10KB
VR165 10KB
VR166 10KB
VR167 10KB
VR168 10KB
VR169 10KB
VR170 10KB
VR171 10KB
VR172 10KB
VR173 10KB
VR174 10KB
VR175 10KB
VR176 10KB
VR177 10KB
VR178 10KB
VR179 10KB
VR180 10KB
VR181 10KB
VR182 10KB
VR183 10KB
VR184 10KB
VR185 10KB
VR186 10KB
VR187 10KB
VR188 10KB
VR189 10KB
VR190 10KB
VR191 10KB
VR192 10KB
VR193 10KB
VR194 10KB
VR195 10KB
VR196 10KB
VR197 10KB
VR198 10KB
VR199 10KB
VR200 10KB
VR201 10KB
VR202 10KB
VR203 10KB
VR204 10KB
VR205 10KB
VR206 10KB
VR207 10KB
VR208 10KB
VR209 10KB
VR210 10KB
VR211 10KB
VR212 10KB
VR213 10KB
VR214 10KB
VR215 10KB
VR216 10KB
VR217 10KB
VR218 10KB
VR219 10KB
VR220 10KB
VR221 10KB
VR222 10KB
VR223 10KB
VR224 10KB
VR225 10KB
VR226 10KB
VR227 10KB
VR228 10KB
VR229 10KB
VR230 10KB
VR231 10KB
VR232 10KB
VR233 10KB
VR234 10KB
VR235 10KB
VR236 10KB
VR237 10KB
VR238 10KB
VR239 10KB
VR240 10KB
VR241 10KB
VR242 10KB
VR243 10KB
VR244 10KB
VR245 10KB
VR246 10KB
VR247 10KB
VR248 10KB
VR249 10KB
VR250 10KB
VR251 10KB
VR252 10KB
VR253 10KB
VR254 10KB
VR255 10KB
VR256 10KB
VR257 10KB
VR258 10KB
VR259 10KB
VR260 10KB
VR261 10KB
VR262 10KB
VR263 10KB
VR264 10KB
VR265 10KB
VR266 10KB
VR267 10KB
VR268 10KB
VR269 10KB
VR270 10KB
VR271 10KB
VR272 10KB
VR273 10KB
VR274 10KB
VR275 10KB
VR276 10KB
VR277 10KB
VR278 10KB
VR279 10KB
VR280 10KB
VR281 10KB
VR282 10KB
VR283 10KB
VR284 10KB
VR285 10KB
VR286 10KB
VR287 10KB
VR288 10KB
VR289 10KB
VR290 10KB
VR291 10KB
VR292 10KB
VR293 10KB
VR294 10KB
VR295 10KB
VR296 10KB
VR297 10KB
VR298 10KB
VR299 10KB
VR300 10KB
VR301 10KB
VR302 10KB
VR303 10KB
VR304 10KB
VR305 10KB
VR306 10KB
VR307 10KB
VR308 10KB
VR309 10KB
VR310 10KB
VR311 10KB
VR312 10KB
VR313 10KB
VR314 10KB
VR315 10KB
VR316 10KB
VR317 10KB
VR318 10KB
VR319 10KB
VR320 10KB
VR321 10KB
VR322 10KB
VR323 10KB
VR324 10KB
VR325 10KB
VR326 10KB
VR327 10KB
VR328 10KB
VR329 10KB
VR330 10KB
VR331 10KB
VR332 10KB
VR333 10KB
VR334 10KB
VR335 10KB
VR336 10KB
VR337 10KB
VR338 10KB
VR339 10KB
VR340 10KB
VR341 10KB
VR342 10KB
VR343 10KB
VR344 10KB
VR345 10KB
VR346 10KB
VR347 10KB
VR348 10KB
VR349 10KB
VR350 10KB
VR351 10KB
VR352 10KB
VR353 10KB
VR354 10KB
VR355 10KB
VR356 10KB
VR357 10KB
VR358 10KB
VR359 10KB
VR360 10KB
VR361 10KB
VR362 10KB
VR363 10KB
VR364 10KB
VR365 10KB
VR366 10KB
VR367 10KB
VR368 10KB
VR369 10KB
VR370 10KB
VR371 10KB
VR372 10KB
VR373 10KB
VR374 10KB
VR375 10KB
VR376 10KB
VR377 10KB
VR378 10KB
VR379 10KB
VR380 10KB
VR381 10KB
VR382 10KB
VR383 10KB
VR384 10KB
VR385 10KB
VR386 10KB
VR387 10KB
VR388 10KB
VR389 10KB
VR390 10KB
VR391 10KB
VR392 10KB
VR393 10KB
VR394 10KB
VR395 10KB
VR396 10KB
VR397 10KB
VR398 10KB
VR399 10KB
VR400 10KB
VR401 10KB
VR402 10KB
VR403 10KB
VR404 10KB
VR405 10KB
VR406 10KB
VR407 10KB
VR408 10KB
VR409 10KB
VR410 10KB
VR411 10KB
VR412 10KB
VR413 10KB
VR414 10KB
VR415 10KB
VR416 10KB
VR417 10KB
VR418 10KB
VR419 10KB
VR420 10KB
VR421 10KB
VR422 10KB
VR423 10KB
VR424 10KB
VR425 10KB
VR426 10KB
VR427 10KB
VR428 10KB
VR429 10KB
VR430 10KB
VR431 10KB
VR432 10KB
VR433 10KB
VR434 10KB
VR435 10KB
VR436 10KB
VR437 10KB
VR438 10KB
VR439 10KB
VR440 10KB
VR441 10KB
VR442 10KB
VR443 10KB
VR444 10KB
VR445 10KB
VR446 10KB
VR447 10KB
VR448 10KB
VR449 10KB
VR450 10KB
VR451 10KB
VR452 10KB
VR453 10KB
VR454 10KB
VR455 10KB
VR456 10KB
VR457 10KB
VR458 10KB
VR459 10KB
VR460 10KB
VR461 10KB
VR462 10KB
VR463 10KB
VR464 10KB
VR465 10KB
VR466 10KB
VR467 10KB
VR468 10KB
VR469 10KB
VR470 10KB
VR471 10KB
VR472 10KB
VR473 10KB
VR474 10KB
VR475 10KB
VR476 10KB
VR477 10KB
VR478 10KB
VR479 10KB
VR480 10KB
VR481 10KB
VR482 10KB
VR483 10KB
VR484 10KB
VR485 10KB
VR486 10KB
VR487 10KB
VR488 10KB
VR489 10KB
VR490 10KB
VR491 10KB
VR492 10KB
VR493 10KB
VR494 10KB
VR495 10KB
VR496 10KB
VR497 10KB
VR498 10KB
VR499 10KB
VR500 10KB
VR501 10KB
VR502 10KB
VR503 10KB
VR504 10KB
VR505 10KB
VR506 10KB
VR507 10KB
VR508 10KB
VR509 10KB
VR510 10KB
VR511 10KB
VR512 10KB
VR513 10KB
VR514 10KB
VR515 10KB
VR516 10KB
VR517 10KB
VR518 10KB
VR519 10KB
VR520 10KB
VR521 10KB
VR522 10KB
VR523 10KB
VR524 10KB
VR525 10KB
VR526 10KB
VR527 10KB
VR528 10KB
VR529 10KB
VR530 10KB
VR531 10KB
VR532 10KB
VR533 10KB
VR534 10KB
VR535 10KB
VR536 10KB
VR537 10KB
VR538 10KB
VR539 10KB
VR540 10KB
VR541 10KB
VR542 10KB
VR543 10KB
VR544 10KB
VR545 10KB
VR546 10KB
VR547 10KB
VR548 10KB
VR549 10KB
VR550 10KB
VR551 10KB
VR552 10KB
VR553 10KB
VR554 10KB
VR555 10KB
VR556 10KB
VR557 10KB
VR558 10KB
VR559 10KB
VR560 10KB
VR561 10KB
VR562 10KB
VR563 10KB
VR564 10KB
VR565 10KB
VR566 10KB
VR567 10KB
VR568 10KB
VR569 10KB
VR570 10KB
VR571 10KB
VR572 10KB
VR573 10KB
VR574 10KB
VR575 10KB
VR576 10KB
VR577 10KB
VR578 10KB
VR579 10KB
VR580 10KB
VR581 10KB
VR582 10KB
VR583 10KB
VR584 10KB
VR585 10KB
VR586 10KB
VR587 10KB
VR588 10KB
VR589 10KB
VR590 10KB
VR591 10KB
VR592 10KB
VR593 10KB
VR594 10KB
VR595 10KB
VR596 10KB
VR597 10KB
VR598 10KB
VR599 10KB
VR600 10KB
VR601 10KB
VR602 10KB
VR603 10KB
VR604 10KB
VR605 10KB
VR606 10KB
VR607 10KB
VR608 10KB
VR609 10KB
VR610 10KB
VR611 10KB
VR612 10KB
VR613 10KB
VR614 10KB
VR615 10KB
VR616 10KB
VR617 10KB
VR618 10KB
VR619 10KB
VR620 10KB
VR621 10KB
VR622 10KB
VR623 10KB
VR624 10KB
VR625 10KB
VR626 10KB
VR627 10KB
VR628 10KB
VR629 10KB
VR630 10KB
VR631 10KB
VR632 10KB
VR633 10KB
VR634 10KB
VR635 10KB
VR636 10KB
VR637 10KB
VR638 10KB
VR639 10KB
VR640 10KB
VR641 10KB
VR642 10KB
VR643 10KB
VR644 10KB
VR645 10KB
VR646 10KB
VR647 10KB
VR648 10KB
VR649 10KB
VR650 10KB
VR651 10KB
VR652 10KB
VR653 10KB
VR654 10KB
VR655 10KB
VR656 10KB
VR657 10KB
VR658 10KB
VR659 10KB
VR660 10KB
VR661 10KB
VR662 10KB
VR663 10KB
VR664 10KB
VR665 10KB
VR666 10KB
VR667 10KB
VR668 10KB
VR669 10KB
VR670 10KB
VR671 10KB
VR672 10KB
VR673 10KB
VR674 10KB
VR675 10KB
VR676 10KB
VR677 10KB
VR678 10KB
VR679 10KB
VR680 10KB
VR681 10KB
VR682 10KB
VR683 10KB
VR684 10KB
VR685 10KB
VR686 10KB
VR687 10KB
VR688 10KB
VR689 10KB
VR690 10KB
VR691 10KB
VR692 10KB
VR693 10KB
VR694 10KB
VR695 10KB
VR696 10KB
VR697 10KB
VR698 10KB
VR699 10KB
VR700 10KB
VR701 10KB
VR702 10KB
VR703 10KB
VR704 10KB
VR705 10KB
VR706 10KB
VR707 10KB
VR708 10KB
VR709 10KB
VR710 10KB
VR711 10KB
VR712 10KB
VR713 10KB
VR714 10KB
VR715 10KB
VR716 10KB
VR717 10KB
VR718 10KB
VR719 10KB
VR720 10KB
VR721 10KB
VR722 10KB
VR723 10KB
VR724 10KB
VR725 10KB
VR726 10KB
VR727 10KB
VR728 10KB
VR729 10KB
VR730 10KB
VR731 10KB
VR732 10KB
VR733 10KB
VR734 10KB
VR735 10KB
VR736 10KB
VR737 10KB
VR738 10KB
VR739 10KB
VR740 10KB
VR741 10KB
VR742 10KB
VR743 10KB
VR744 10KB
VR745 10KB
VR746 10KB
VR747 10KB
VR748 10KB
VR749 10KB
VR750 10KB
VR751 10KB
VR752 10KB
VR753 10KB
VR754 10KB
VR755 10KB
VR756 10KB
VR757 10KB
VR758 10KB
VR759 10KB
VR760 10KB
VR761 10KB
VR762 10KB
VR763 10KB
VR764 10KB
VR765 10KB
VR766 10KB
VR767 10KB
VR768 10KB
VR769 10KB
VR770 10KB
VR771 10KB
VR772 10KB
VR773 10KB
VR774 10KB
VR775 10KB
VR776 10KB
VR777 10KB
VR778 10KB
VR779 10KB
VR780 10KB
VR781 10KB
VR782 10KB
VR783 10KB
VR784 10KB
VR785 10KB
VR786 10KB
VR787 10KB
VR788 10KB
VR789 10KB
VR790 10KB
VR791 10KB
VR792 10KB
VR793 10KB
VR794 10KB
VR795 10KB
VR796 10KB
VR797 10KB
VR798 10KB
VR799 10KB
VR800 10KB
VR801 10KB
VR802 10KB
VR803 10KB
VR804 10KB
VR805 10KB
VR806 10KB
VR807 10KB
VR808 10KB
VR809 10KB
VR810 10KB
VR811 10KB
VR812 10KB
VR813 10KB
VR814 10KB
VR815 10KB
VR816 10KB
VR817 10KB
VR818 10KB
VR819 10KB
VR820 10KB
VR821 10KB
VR822 10KB
VR823 10KB
VR824 10KB
VR825 10KB
VR826 10KB
VR827 10KB
VR828 10KB
VR829 10KB
VR830 10KB
VR831 10KB
VR832 10KB
VR833 10KB
VR834 10KB
VR835 10KB
VR836 10KB
VR837 10KB
VR838 10KB
VR839 10KB
VR840 10KB
VR841 10KB
VR842 10KB
VR843 10KB
VR844 10KB
VR845 10KB
VR846 10KB
VR847 10KB
VR848 10KB
VR849 10KB
VR850 10KB
VR851 10KB
VR852 10KB
VR853 10KB
VR854 10KB
VR855 10KB
VR856 10KB
VR857 10KB
VR858 10KB
VR859 10KB
VR860 10KB
VR861 10KB
VR862 10KB
VR863 10KB
VR864 10KB
VR865 10KB
VR866 10KB
VR867 10KB
VR868 10KB
VR869 10KB
VR870 10KB
VR871 10KB
VR872 10KB
VR873 10KB
VR874 10KB
VR875 10KB
VR876 10KB
VR877 10KB
VR878 10KB
VR879 10KB
VR880 10KB
VR881 10KB
VR882 10KB
VR883 10KB
VR884 10KB
VR885 10KB
VR886 10KB
VR887 10KB
VR888 10KB
VR889 10KB
VR890 10KB
VR891 10KB
VR892 10KB
VR893 10KB
VR894 10KB
VR895 10KB
VR896 10KB
VR897 10KB
VR898 10KB
VR899 10KB
VR900 10KB
VR901 10KB
VR902 10KB
VR903 10KB
VR904 10KB
VR905 10KB
VR906 10KB
VR907 10KB
VR908 10KB
VR909 10KB
VR910 10KB
VR911 10KB
VR912 10KB
VR913 10KB
VR914 10KB
VR915 10KB
VR916 10KB
VR917 10KB
VR918 10KB
VR919 10KB
VR920 10KB
VR921 10KB
VR922 10KB
VR923 10KB
VR924 10KB
VR925 10KB
VR926 10KB
VR927 10KB
VR928 10KB
VR929 10KB
VR930 10KB
VR931 10KB
VR932 10KB
VR933 10KB
VR934 10KB
VR935 10KB
VR936 10KB
VR937 10KB
VR938 10KB
VR939 10KB
VR940 10KB
VR941 10KB
VR942 10KB
VR943 10KB
VR944 10KB
VR945 10KB
VR946 10KB
VR947 10KB
VR948 10KB
VR949 10KB
VR950 10KB
VR951 10KB
VR952 10KB
VR953 10KB
VR954 10KB
VR955 10KB
VR956 10KB
VR957 10KB
VR958 10KB
VR959 10KB
VR960 10KB
VR961 10KB
VR962 10KB
VR963 10KB
VR964 10KB
VR965 10KB
VR966 10KB
VR967 10KB
VR968 10KB
VR969 10KB
VR970 10KB
VR971 10KB
VR972 10KB
VR973 10KB
VR974 10KB
VR975 10KB
VR976 10KB
VR977 10KB
VR978 10KB
VR979 10KB
VR980 10KB
VR981 10KB
VR982 10KB
VR983 10KB
VR984 10KB
VR985 10KB
VR986 10KB
VR987 10KB
VR988 10KB
VR989 10KB
VR990 10KB
VR991 10KB
VR992 10KB
VR993 10KB
VR994 10KB
VR995 10KB
VR996 10KB
VR997 10KB
VR998 10KB
VR999 10KB
VR1000 10KB
D G S 2SK117
E C B 2SA733 2SA970 2SC945L 2SC2240
E C B 2SA964 2SC2229
E C B 2SA899 2SC1904
B C E 2SA968 2SC2238
C B E 2SB681 2SD551
NOTE
UNLESS OTHERWISE SPECIFIED
ALL RESISTORS IN OHMS 1/4W (J)
ALL CAPACITORS IN μF 50WV (J)
(FS) = FAIL SAFE RESISTORS
(-||-) = NON-POLER CAPACITORS
POWER TRANSFORMER IS DIFFERENT ACCORDING TO AREA
PS-120M
SCHEMATIC DIAGRAM
NO.4-3 1580854A
2C

PS-200M

LEFT

INPUT

DC

NORM

NORM

DC

INPUT

RIGHT

FILTER P.C BOARD PM-1203

U/T

POWER

AC110V to 240V 50Hz/60Hz

AC OUTLET

FUSE P.C BOARD(U) PM-2017

MAIN AMP P.C BOARD PM-1201 (LEFT)

CEE

UK

CEE

UK

CEE UK

POWER

AC220V/240V 50Hz

RELAY TERMINAL P.C BOARD PM-1247

FUSE P.C BOARD (E) PM-2019

CSA AAL

POWER

AC120V 60Hz

AC OUTLET

RELAY TERMINAL P.C BOARD PM-1247

FUSE P.C BOARD(C) PM-2018

MAIN AMP P.C BOARD PM-1202 (RIGHT)

0010208

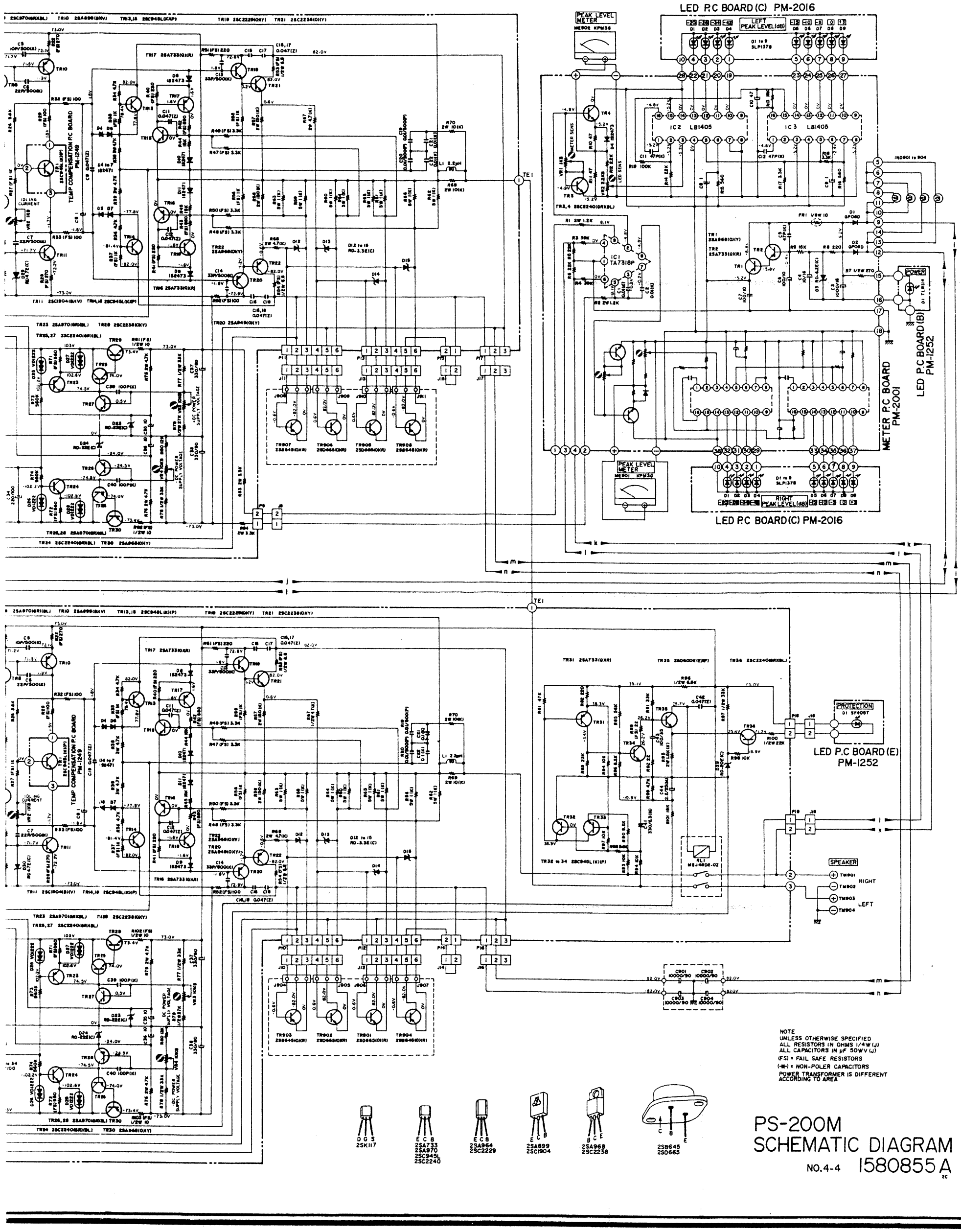

NOTE
UNLESS OTHERWISE SPECIFIED
ALL RESISTORS IN OHMS 1/4W (J)
ALL CAPACITORS IN μF 50WV (J)
(FS) = FAIL SAFE RESISTORS
(-||-) = NON-POLER CAPACITORS
POWER TRANSFORMER IS DIFFERENT ACCORDING TO AREA

PS-200M
SCHEMATIC DIAGRAM

NO.4-4 1580855 A
2C