PIONEER SF-850 KL

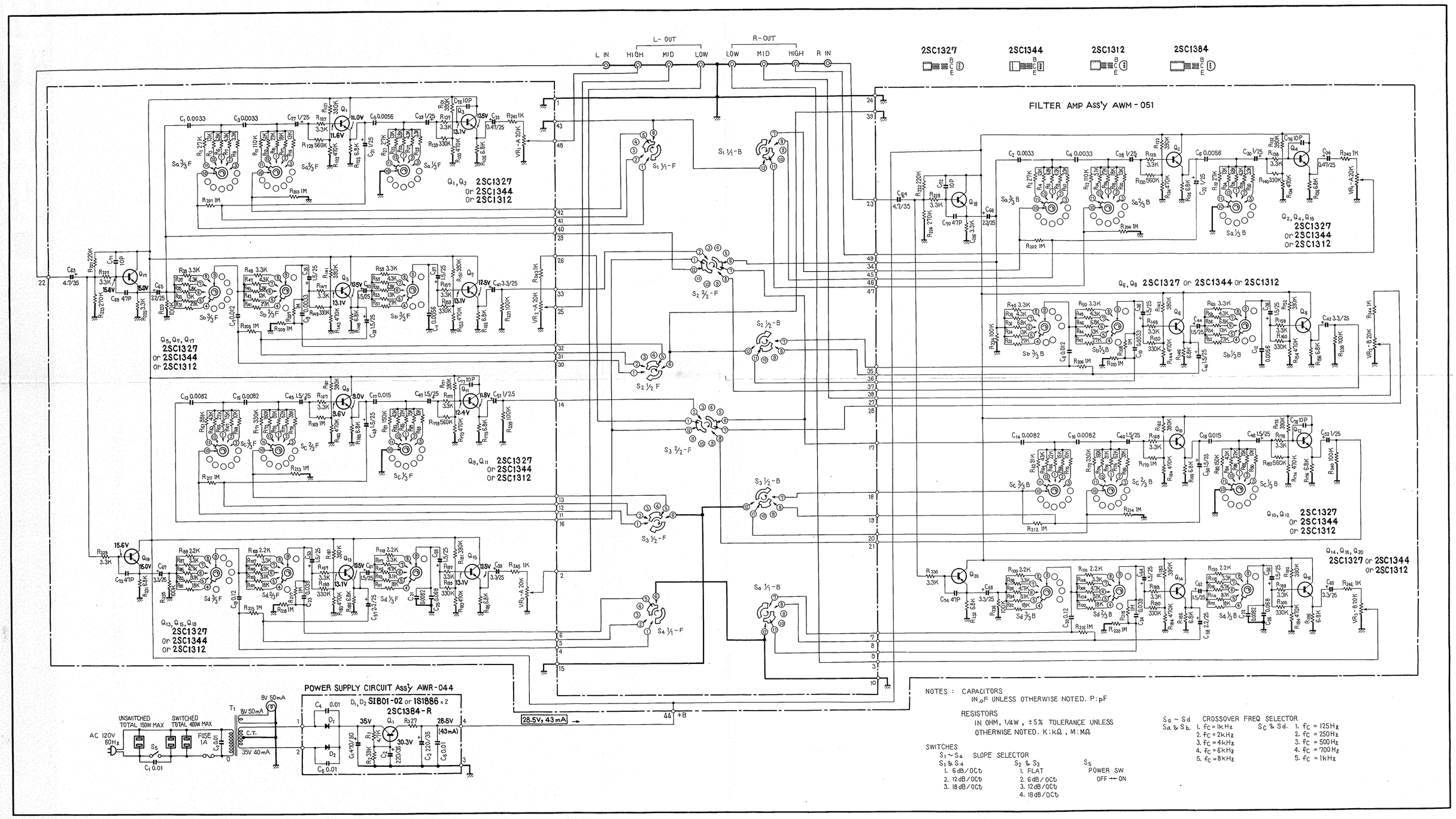

NOTES : CAPACITORS
IN μF UNLESS OTHERWISE NOTED. P: pF

RESISTORS
IN OHM, 1/4W, ±5% TOLERANCE UNLESS OTHERWISE NOTED. K: kΩ, M: MΩ

SWITCHES

$S_1 \sim S_4$ SLOPE SELECTOR

S_1 & S_4	S_2 & S_3	S_5
1. 6dB/OCt	1. FLAT	POWER SW
2. 12dB/OCt	2. 6dB/OCt	OFF → ON
3. 18dB/OCt	3. 12dB/OCt	
	4. 18dB/OCt	

$S_a \sim S_d$ CROSSOVER FREQ SELECTOR

S_a & S_b	S_c & S_d
1. f_c = 1kHz	1. f_c = 125Hz
2. f_c = 2kHz	2. f_c = 250Hz
3. f_c = 4kHz	3. f_c = 500Hz
4. f_c = 6kHz	4. f_c = 700Hz
5. f_c = 8kHz	5. f_c = 1kHz